TERASAKI

Innovators in Protection Technology

TemBreak2 & TemBreak

MCCBs from 12A to 3200A • MCCBs for 1000V AC
MCCBs for 1000V DC • MCCBs with Integral RCD
Switch Disconnectors • Measurement and Data Communication

OUR CUSTOMER CARE COMMITMENTS

Quality is Guaranteed

All products supplied from this catalogue carry a guarantee against defects in materials and workmanship for a period of 12 months from date of purchase as standard.

Quality is Accredited

Terasaki has ISO 9001 accreditation for the manufacture, sale and distribution of all products featured in this catalogue.

Technical Support is Free

We offer free technical support and application software to all customers. This could range from selecting a product for an unusual application through to carrying out a protection study.

Ordering is Easy

We have made ordering easy for you by colour coding the sections of this catalogue and including order codes

Sales Order Line

+44 (0) 141 941 1940
sales@terasaki.co.uk

Terasaki supply circuit breakers which protect people and equipment from electrical faults. Safety and protection are the prime purposes of our products.

Our products are designed and tested at our headquarters in Osaka, Japan.

Our test laboratory meets the requirements of DEKRA (formerly KEMA) and is used to test and certify our products to international standards.

We supply our products to switchboard builders, shipbuilders and equipment manufacturers. We are global market leaders for switchgear in the marine market. Terasaki have worldwide export experience and language skills to support your business.

Please read further to discover the benefits of TemBreak 2.

PRODUCTS

Air Circuit Breakers

Moulded Case Circuit Breakers

Miniature Circuit Breakers

PROJECTS

DATA CENTRE:
Telehouse
London, UK

POWER PLANT:
West County Energy Centre, Florida, USA

AUTOMOTIVE:
Toyota Manufacturing Plant, Argentina

NUCLEAR POWER:
Ringhals, Sweden

SOLAR POWER:
South Italy

DESALINATION PLANT:
Spain

TIMELINE

- **1923** — **Founded in Japan to make switches for ships**
- **1945** — **Terasaki develop circuit breakers**
- **1965** — **Developed the first current limiting breakers**
- **2002** — **Patented a double-break ACB**

Contactors

Distribution Boards

Retrofits

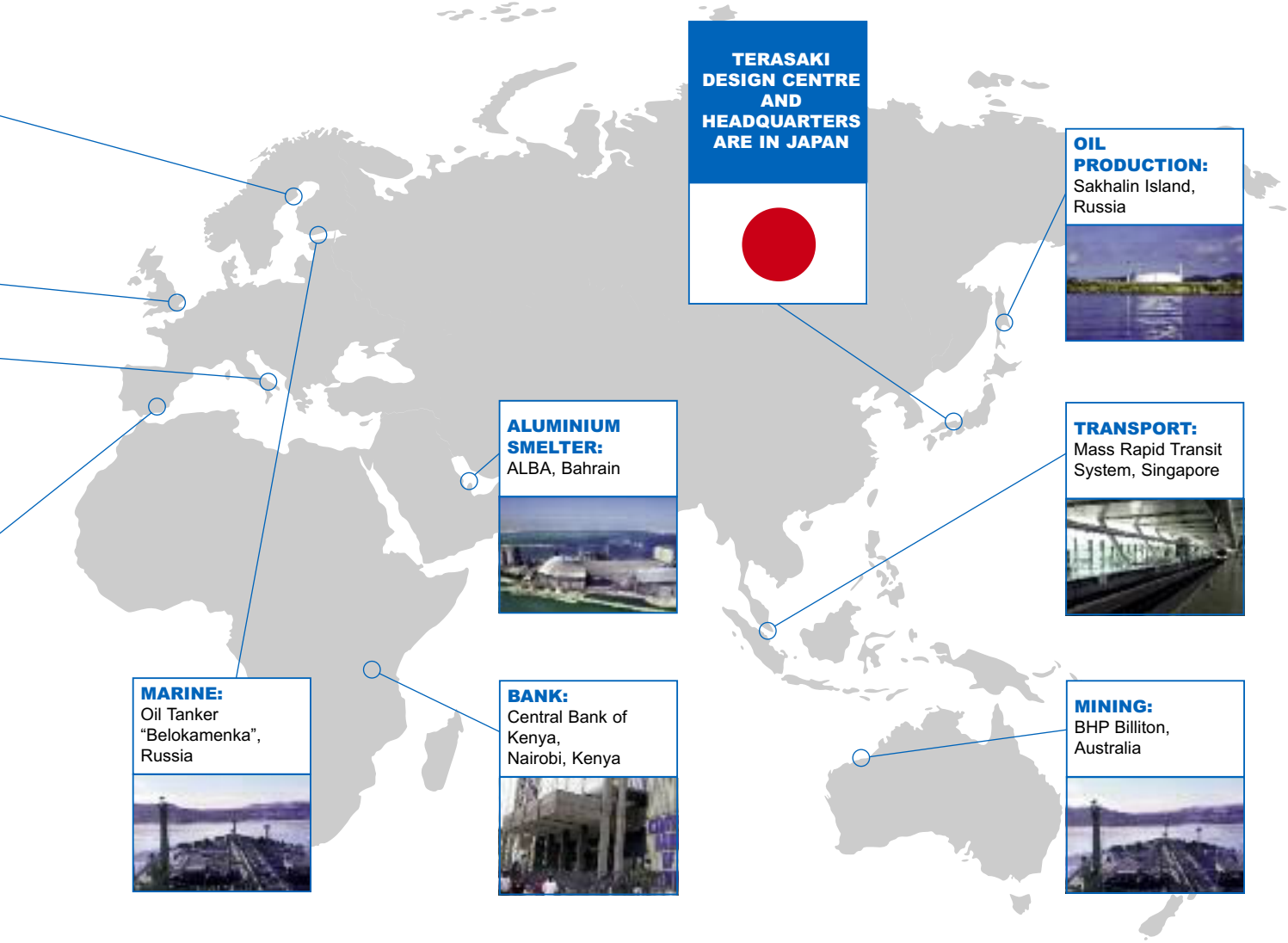

Development of circuit breaker with integral residual current protection (CBR)

2008

Certified ISO 9001

Terasaki and its major facilities have attained ISO 9000 series certification the international standard for quality assurance.

Certified ISO 14001

Terasaki has attained ISOS 14001 certification the international standard for environmental management systems.

Certified OHSAS 18001

Terasaki has attained OHSAS 18001 certification the standard for occupational health and safety management systems.

10 REASONS TO USE TEMBREAK 2

1. FIELD-INSTALLABLE ACCESSORIES

- Most accessories can be fitted by the switchboard builder or added by the end-user.
- All accessories are endurance tested to the same level as the host MCCB.

2. SAFETY LOCK FOR PLUG-IN VERSIONS

Plug-in MCCB and base

The plug-in MCCB is locked to the base when the toggle is ON. It cannot be removed unless the toggle is OFF or TRIPPED. The safety lock prevents a trip occurring while the MCCB is being removed from the base. Safety lock is available on plug-in MCCBs up to 800A.

3. SMALLER 1000A MCCB

Previous 1000A MCCB

New 1000A MCCB

The new 1000A MCCB is only 213mm high by 210mm wide - the same size as an 800A MCCB. This offers a cost-effective and space-effective solution for large loads.

4. SUPERIOR TEMPERATURE PERFORMANCE

Overheating is the most common cause of failure in electrical switchgear. You can reduce the likelihood of overheating by using switchgear with superior temperature performance.

We can offer TemBreak2 MCCBs for use at 50°C without derating from 20A to 1600A.

5. COMPACT INTERLOCKS

Changeover Pair with Link Interlock and Motor Operators

Viewed from Below (250A frame)

The mechanical interlock is installed on the front of the MCCB, and fits underneath motor operators and external operating handles. An automatic changeover system can be assembled in a few minutes by a switchboard builder on end-user. Compact interlocks are available on MCCBs up to 800A.

10 REASONS TO USE TEMBREAK 2

6. CIRCUIT BREAKER WITH INTEGRAL RESIDUAL CURRENT PROTECTION (CBRs)

Terasaki CBRs deliver integrated protection from earth leakage faults, overloads and short-circuits in one device. Ideal for the mining industry, temporary site supplies, heavy industry and commercial building use.

7. DIRECT OPENING ACTION

Under the heading "Measures to minimise the risk in the event of failure". IEC 60204-1 Safety of Machinery-Electrical Equipment of Machinery includes the following recommendation:

"-the use of switching devices having positive (or direct) opening operation".

8. UNSURPASSED FLEXIBILITY

TemBreak2 offers:

- Electronic protection up to 3200A
- Measurement and data communication
- Thermal-magnetic protection (fixed and adjustable) up to 800A

9. NEW 75MM WIDE MCCB UP TO 160A, 40KA

Save space and save money with our Lite 160A frame breaker.

10. VISUAL SAFETY

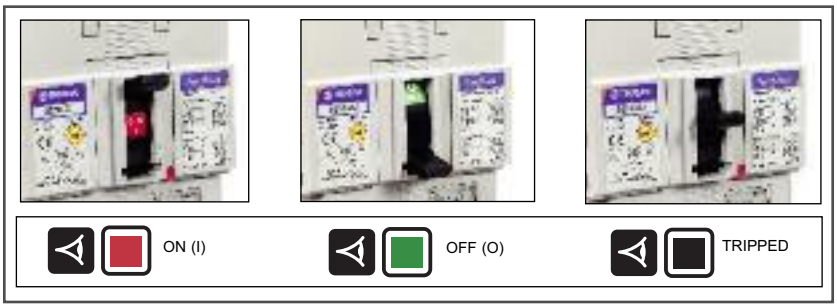

Coloured indicators display the ON or OFF status.
The indicators are fully covered if the breaker trips, and black is the only visible colour.

WELCOME TO TEMBREAK 2

Terasaki have an innovative approach to product design. Our goal is to develop products which not only meet, but exceed recognised standards.

We use our knowledge of related applications to improve circuit breaker designs. For instance, when developing the Direct Opening Action, we applied ideas from a machinery safety standard to the design of the TemBreak 2 switching mechanism.

This pro-active development policy confirms our reputation as Innovators in Protection Technology.

Machine Safety

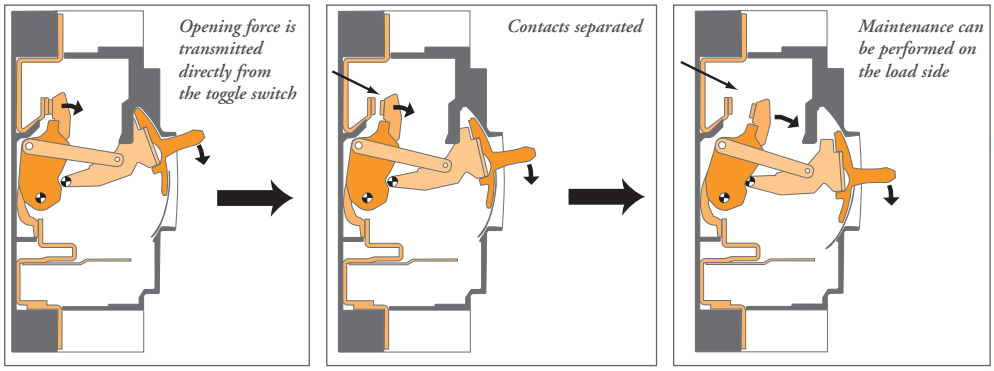

TemBreak 2 MCCBs are marked with IEC symbol indicating Direct Opening Action. ⊖

The robust mechanism ensures that the force you apply to the toggle is transmitted directly to the contacts.

Under the heading "Measures to minimise risk in the event of failure", IEC 60204-1 Safety of Machinery - Electrical Equipment of Machines includes the following recommendation:

" - the use of switching devices having positive (or direct) opening operation."

TemBreak 2 MCCBs help you to comply with the world's most stringent safety standards. It is one of the safest switching devices for machinery.

Visual Safety

You can easily see if a breaker is open, closed or tripped. **SAFETY+** coloured indicators boldly display the ON or OFF status. The indicators are fully covered if a breaker trips, and black is the only visible colour.

This is a ***unique*** safety feature. You can identify faulty circuits at a glance.

The toggle position always matches the position of the main contacts.

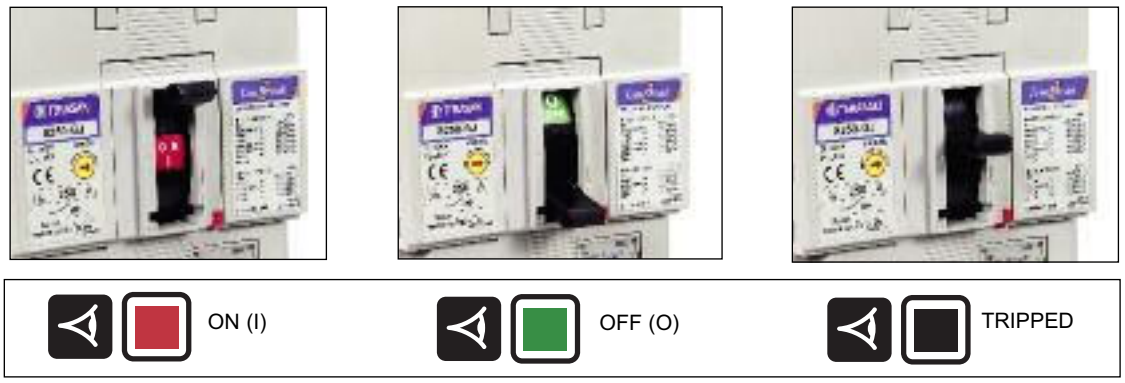

Touch Safety

The risk of touching live parts has been minimised by design.
These features reduce the risk of touching live parts:

- There are no exposed metal screws on the front face
- IP20 protection at the terminals
- IP30 protection at the toggle
- If the toggle is broken by accident or misuse, no live part is exposed
- No live parts are exposed when fitting accessories
- Double Insulation

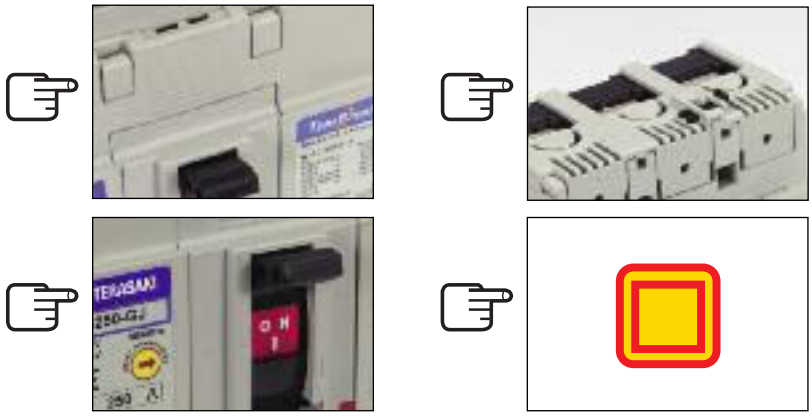

WELCOME TO TEMBREAK 2

JAPANESE DESIGN: EXCEEDING STANDARDS

Safety Plus

TemBreak 2 MCCBs exceed the requirements of recognised standards.

International Compliance

- The TemBreak 2 MCCB complies with the international standard **IEC 60947-2**
- TemBreak 2 Switch Disconnectors comply with **IEC 60947-3**
- Accessories comply with **IEC 60947-5-1**
- The entire range conforms to the IEC general rules for switchgear, **IEC 60947-1**
- TemBreak 2 MCCBs comply with **JIS C 8201-2-1 Ann.1**
- The TemBreak 2 range complies with the EC Low Voltage Directive and all models are CE marked
- TemBreak 2 MCCBs carry the IEC symbol indicating Direct Opening Action as defined by **IEC 60947-5-1**. **IEC 60204-1, Safety of Machinery - Electrical Equipment of Machines** recommends that switches used for machinery have Direct Opening Action to minimise risk in the event of failure
- TemBreak 2 MCCBs have breaking capacity ratings according to the NEMA AB1 Standard

Independent Tests

TemBreak 2 circuit breakers have been tested at independent laboratories as well as in Terasaki's own laboratory in Osaka, Japan. Copies of independent test reports are available on request.

Marine Approvals

TemBreak 2 MCCBs are approved by the leading marine approval organisations.

JAPANESE DESIGN: REDUCING ENVIRONMENTAL IMPACT

1

Longer Life Cycle

It makes good environmental sense to install a product with a long life expectancy. If you install a TemBreak 2 MCCB, you can expect it to stay in service for at least 30,000 mechanical operations (250A Frame). This is 22,000 more operations than recommended by IEC 60947-2, the international standard for circuit breakers.

If a system must be upgraded in future, we have made the following provisions for recycling:

1. The modular design of TemBreak 2 allows component parts and accessories to be easily disassembled and separately disposed of. Moulded parts do not contain any embedded metal parts.
2. Materials are clearly marked to allow future identification for easy recycling.

2

Uses Eco-friendly Materials

The following materials are used in most TemBreak 2 circuit breakers:

- Thermoplastic resin not containing PBBs or PBDEs
- Lead-free solder
- Cadmium-free contacts

Lighter and Smaller

Components with low weight and volume make life easy for users, but high performance from smaller products also means less material used and less waste produced.

ISO 14001

Terasaki operate an Environmental Management System accredited to ISO 14001:2004. This requires us to monitor and measure the environmental performance of our activities, products and services in order to continually improve such performance.

CONTENTS

TEMBREAK 2 & TEMBREAK

MCCBS FROM 12A TO 3200A • MCCBS FOR 1000V AC
MCCBS FOR 1000V DC • MCCBS WITH INTEGRAL RCD
SWITCH DISCONNECTORS • MEASUREMENT AND DATA COMMUNICATION

RATINGS AND SPECIFICATIONS	**SECTION 1**
PROTECTION CHARACTERISTICS	**SECTION 2**
APPLICATION DATA	**SECTION 3**
ACCESSORIES	**SECTION 4**
INSTALLATION	**SECTION 5**
DIMENSIONS	**SECTION 6**
ORDER CODES	**SECTION 7**

RATINGS AND SPECIFICATIONS

Frame Reference	TB2 Lite 160	TB2 Lite 250	TB2 S125	TB2 S250	TB2 S/H/L 250	TB2 H/L 400	TB2 E/S 630	
Max. In (A) of Frame	160	250	125	250	250	400	630	
TEMBREAK 2 MOULDED CASE CIRCUIT BREAKERS			S125-NJ S125-GJ	S160-NJ S160-GJ S250-NJ S250-GJ	H125-NJ L125-NJ H160-NJ L160-NJ H250-NJ L250-NJ S250-NE S250-GE S250-PE H250-NE	H400-NE L400-NE	E400-NJ S400-CJ S400-NJ S400-GJ S400-PJ S400-NE S400-GE S400-PE S630-CE E630-NE S630-GE	
TEMBREAK 2 CIRCUIT BREAKERS WITH Icu = 70KA AT 690V Ac					L125-PJ	L400-PE		
TEMBREAK 2 CIRCUIT BREAKERS FOR 1000V Ac			VS125-NJ	VS250-NJ			XV400NE①②	
TEMBREAK 2 LITE SPACE SAVING, MONEY SAVING MOULDED CASE CIRCUIT BREAKERS	E160-SF S160-SCF S160-SF E160-SJ S160-SCJ S160-SJ	E250-SCF E250-SF S250-SF E250-SCJ E250-SJ S250-SJ						
TEMBREAK 2 CIRCUIT BREAKERS WITH INTEGRAL RESIDUAL CURRENT PROTECTION (CBR)			ZE125-NJ ZS125-NJ ZS125-GJ	ZE250-NJ ZS250-NJ ZS250-GJ				
TEMBREAK 2 CIRCUIT BREAKERS AND SWITCH-DISCONNECTORS FOR USE ABOVE 250V DC	S160-SD S160-GD S160-SDN	S250-SD S250-GD S250-SDN		PVS160-SDL PVS160-SDH PVS160-SNL PVS160-SNH PVS250-SDL PVS250-SDH PVS250-SNL PVS250-SNH		PVS400-NDL PVS400-NDH PVS400-NNL PVS400-NNH	S400-ND	
TEMBREAK 2 SWITCH DISCONNECTORS	S160-SN	S250-SN	S125-NN	S250-NN			S400-NN	

CONTENTS | SECTION 1

	TB2 H/L 800	TB2 1000	TB2 1250	TB2 1600	TB 3200	
	800	1000	1250	1600	3200	
	H800-NE L800-NE	S800-CJ S800-NJ S800-RJ S800-NE S800-RE S1000-SE S1000-NE	S1250-SE S1250-NE S1250-GE	S1600-SE S1600-NE	XS2000-NE① XS2500-NE① XS3200-NE①	**TEMBREAK 2 MOULDED CASE CIRCUIT BREAKERS** Pages 15 - 22
	L800-PE					**TEMBREAK 2 CIRCUIT BREAKERS WITH ICU = 70KA AT 690V AC** Page 23
		XV630PE①② XV800PE①②	XV1250NE①②			**TEMBREAK 2 CIRCUIT BREAKERS FOR 1000V AC** Page 24
						TEMBREAK 2 LITE SPACE SAVING, MONEY SAVING MOULDED CASE CIRCUIT BREAKERS Pages 25 - 28
						TEMBREAK 2 CIRCUIT BREAKERS WITH INTEGRAL RESIDUAL CURRENT PROTECTION (CBR) Pages 29 - 30
	PVS800-NDL PVS800-NDH PVS800-NNL PVS800-NNH	S800-ND S1000-ND	XS1250ND①	XS1600ND①	XS2000ND① XS2500ND① XS32000ND①	**CIRCUIT BREAKERS AND SWITCH-DISCONNECTORS FOR USE ABOVE 250V DC** Pages 31 - 34
		S800-NN	S1250-NN	S1600-NN	XS2000-NN①② XS2500-NN①②	**SWITCH DISCONNECTORS** Pages 35 - 38

① Tembreak 1. Frame sizes vary from TemBreak 2.
② Contact Terasaki for ratings and specifications.

RATINGS AND SPECIFICATIONS

TEMBREAK 2 MOULDED CASE CIRCUIT BREAKERS

MCCB Electrical Characteristics to IEC 60947-2, EN 60947-2, JIS C 8201-2-1 ANN.1, AS/NZS 3947-2, NEMA AB-1

Frame Reference	Quantity	Unit	Condition	TB2 S125	
Max In (A) of Frame				**125**	
Model				S125	S125
Number of Poles				3, 4	3,4
Type				NJ	GJ
Nominal current ratings					
	I_n	(A)	50°C	20,32,50, 63,100,125	20,32,50, 63,100,125
Electrical characteristics					
Rated operational voltage	U_e	(V)	AC 50/60 Hz	690	690
			DC	250	250
Rated insulation voltage	U_i	(V)		800	800
Rated impulse withstand voltage	U_{imp}	(kV)		8	8
Ultimate breaking capacity (IEC, JIS, AS/NZS)	I_{cu}	(kA)	690V AC	6	6
			525V AC	22	25
			440V AC	25	50
			400/415V AC	36	65
			220/240V AC	50	85
			250V DC	25	40
Service breaking capacity (IEC, JIS, AS/NZS)	I_{cs}	(kA)	690V AC	6	6
			525V AC	22	22
			440V AC	25	25
			400/415V AC	36/30	36/33
			220/240V AC	50	85
			250V DC	19	40
Rated breaking capacity (NEMA)		(kA)	480V AC	22	25
			240VAC	50	85
Protection					
Adjustable thermal, adjustable magnetic				■	■
Fixed thermal, fixed magnetic					
Microprocessor					
Utilisation category				A	A
Installation					
Front connection (FC)				■	■
Extension bar (FB)				•	•
Cable clamp (FW)				•	•
Rear connection (RC)				•	•
Plug-in (PM)				•	•
DIN rail mounting (DA)				•	•
Dimensions	height	(mm)		155	155
	width	(mm)	3 pole, (1 pole)	90	90
			4 pole	120	120
	depth	(mm)		68	68
Weight	weight	(kg)	3 pole, (1 pole)	1.1	1.1
			4 pole	1.4	1.4
Operation					
Direct Opening Action				■	■
Toggle operation				■	■
Door mounted (HS) / Breaker mounted handle (HB)				•	•
Motor operation (MC)				•	•
Endurance	Electrical	cycles	415V AC	30,000	
	Mechanical	cycles		30,000	

■ Standard • Optional - Not Available

	TB2 S250				TB2 S/H/L 250					
	160		250		125		160		250	
	S160	S160	S250	S250	H125	L125	H160	L160	S250	S250
	3, 4 NJ	3, 4 GJ	3, 4 NJ	3, 4 GJ	3, 4 NJ	3, 4 NJ	3, 4 NJ	3, 4 NJ	3, 4 NE	3, 4 GE
	20,32,50, 63,100, 125,160	50,63,100, 125,160	160 200 250	160 200 250	20,32, 50,63, 100, 125	20,32, 50,63, 100, 125	160	160	40 125 160 250	40 125 160 250
	690 250 800 8	690 250 800 8	690 250 800 8	690 250 800 8	690 250 800 8	690 250 800 8	690 250 800 8	690 250 800 8	690 - 800 8	690 - 800 8
	7.5 (5*) 25 (18*) 25 (18*) 36 (30*) 65 (42*) 40 (30*)	7.5 25 50 65 85 40	7.5 25 25 36 65 40	7.5 25 50 65 85 40	20 45 120 125 150 40	25 65 180 200 200 40	20 45 120 125 150 40	25 65 180 200 200 40	7.5 25 25 36 65 -	7.5 25 50 65 85 -
	7.5 (5*) 25 (18*) 25 (18*) 36 (25*) 65 (35*) 40 (25*)	7.5 25 25 36 85 40	7.5 25 25 36 65 40	7.5 25 25 36 85 40	15 45 80 85 150 40	20 65 135 150 150 40	15 45 80 85 150 40	20 65 135 150 150 40	7.5 25 25 36 65 -	7.5 25 25 36 85 -
	22 (18*) 65 (42*)	25 85	22 65	25 85	45 150	65 200	45 150	65 200	25 65	25 85
	■ A	■ A	■ A	■ A	■ A	■ A	■ A	■ A	■ A	■ A
	■ ● ● ● ● - 165 105 140 68 1.5 1.9	■ ● ● ● ● - 165 105 140 68 1.5 1.9	■ ● ● ● ● - 165 105 140 68 1.5 1.9	■ ● ● ● ● - 165 105 140 68 1.5 1.9	■ ● ● ● ● - 165 105 140 103 2.4 3.2	■ ● ● ● ● - 165 105 140 103 2.4 3.2	■ ● ● ● ● - 165 105 140 103 2.5 3.3	■ ● ● ● ● - 165 105 140 103 2.5 3.3	■ ● ● ● ●** - 165 105 140 103 2.3 3.1	■ ● ● ● ●** - 165 105 140 103 2.3 3.1
	■ ■ ● ●	■ ■ ● ●	■ ■ ● ●	■ ■ ● ●	■ ■ ● ●	■ ■ ● ●	■ ■ ● ●	■ ■ ● ●	■ ■ ● ●	■ ■ ● ●
	20,000 30,000		10,000 30,000		30,000 30,000		20,000 30,000		10,000 30,000	

*Applies only to 20A and 32A models

**Max. rating 200A for Plug-in

RATINGS AND SPECIFICATIONS

TEMBREAK 2 MOULDED CASE CIRCUIT BREAKERS

MCCB Electrical Characteristics to IEC 60947-2, EN 60947-2, JIS C 8201-2-1 ANN.1, AS/NZS 3947-2, NEMA AB-1

Frame Reference	Quantity	Unit	Condition	TB2 S/H/L 250			
Max In (A) of Frame				**250**			
Model				S250	H250	H250	L250
Number of Poles				3, 4	3, 4	3, 4	3, 4
Type				PE	NJ	NE	NJ
Nominal current ratings							
	I_n	(A)	50°C	40, 125 160 250	160, 250	40, 125 160 250	160 250
Electrical characteristics							
Rated operational voltage	U_e	(V)	AC 50/60 Hz DC	690 -	690 250	690 -	690 250
Rated insulation voltage	U_i	(V)		800	800	800	800
Rated impulse withstand voltage	U_{imp}	(kV)		8	8	8	8
Ultimate breaking capacity (IEC, JIS, AS/NZS)	I_{cu}	(kA)	690V AC	20	20	20	25
			525V AC	35	45	45	65
			440V AC	50	120	120	180
			400/415V AC	70	125	125	200
			220/240V AC	125	150	150	200
			250V DC	-	40	-	40
Service breaking capacity (IEC, JIS, AS/NZS)	I_{cs}	(kA)	690V AC	15	15	15	20
			525V AC	35	45	45	65
			440V AC	50	80	80	135
			400/415V AC	70	85	85	150
			220/240V AC	125	150	150	150
			250V DC	-	40	-	40
Rated breaking capacity (NEMA)		(kA)	480V AC	35	45	45	65
			240V AC	125	150	150	200
Rated short-time withstand current	I_{cw}	(kA)	0.3 Seconds	-	-	-	-
Protection							
Adjustable thermal, adjustable magnetic					■		■
Fixed thermal, fixed magnetic							
Microprocessor				■		■	
Utilisation category				A	A	A	A
Installation							
Front connection (FC)				■	■	■	■
Extension bar (FB)				●②	●	●②	●
Cable clamp (FW)				●②	●	●②	●
Rear connection (RC)				●②	●	●②	●
Plug-in (PM)				-	●②	-	●②
DIN rail mounting (DA)				-	-	-	-
Dimensions	height	(mm)		165	165	165	165
	width	(mm)	3 pole	105	105	105	105
		(mm)	4 pole	140	140	140	140
	depth	(mm)		103	103	103	103
Weight	weight	(kg)	3 pole	2.5	2.4	2.5	2.4
			4 pole	3.3	3.2	3.3	3.2
Operation							
Direct Opening Action				■	■	■	■
Toggle operation				■	■	■	■
Door mounted (HS) / Breaker mounted handle (HB)				●	●	●	●
Motor operation (MC)				●	●	●	●
Endurance	Electrical	cycles	415V AC	10,000			
	Mechanical	cycles		30,000			

■ Standard ● Optional - Not Available

	TB2 H/L 400		TB2 E/S 630										
	400		**630**										
	H400	L400	E400	S400	S400	S400	S400	S400	S400	S400	E630	S630	S630
	3, 4 NE	3, 4 NE	3, 4 NJ	3, 4 CJ	3, 4 NJ	3, 4 NE	3, 4 GJ	3,4 GE	3, 4 PJ	3, 4 PE	3, 4 NE	3, 4 CE	3, 4 GE
	250 400	250 400	250 400	250 400	250 400	250 400	250 400	250 400	250 400	250, 400	630	630	630
	690 - 800 8	690 - 800 8	525 250 800 8	690 250 800 8	690 250 800 8	690 - 800 8	690 250 800 8	690 - 800 8	690 250 800 8	690 - 800 8	690① - 800 8	690① - 800 8	690① - 800 8
	35 45 120 125 150 -	50 65 180 200 200 -	- 15 22 25 35 25	15 22 30 36 50 40	20 30 45 50 85 40	20 30 45 50 85 -	20 30 65 70 100 40	20 30 65 70 100 -	20 30 80 85 100 40	20 30 80 85 100 -	10① 15 25 36 50 -	20① 30 45 50 85 -	20① 30 65 70 100 -
	35 45 80 85 150 -	50 65 135 150 150 -	- 15 22 25 35 19	15 22 30 36 50 40	15 30 45 50 85 40	15 30 45 50 85 -	15 30 50 50 85 40	15 30 50 50 85 -	15 30 80 85 85 40	15 30 80 85 85 -	10① 15 25 36 50 -	15① 30 45 50 85 -	15① 30 50 50 85 -
	45 150	65 200	15 35	22 50	25 85	25 85	30 100	30 100	30 100	30 100	15 50	25 85	30 100
	5	5	-	-	-	5	-	5	-	5	-	-	
	■ B	■ B	■ A	■ A	■ A	■ B	■ A	■ B	■ A	■ B	■ A	■ A	■ A
	■ ● ● ● ● - 260 140 185 140 7.1 9.4	■ ● ● ● ● - 260 140 185 140 7.1 9.4	■ ● ● ● ● - 260 140 185 103 4.2 5.6	■ ● ● ● ● - 260 140 185 103 4.3 5.6	■ ● ● ● ● - 260 140 185 103 4.2 5.6	■ ● ● ● ● - 260 140 185 103 4.3 5.7	■ ● ● ● ● - 260 140 185 103 4.2 5.6	■ ● ● ● ● - 260 140 185 103 4.3 5.7	■ ● ● ● ● - 260 140 185 103 4.2 5.6	■ ● ● ● ● - 260 140 185 103 4.3 5.7	■ ● - ● ② - 260 140 185 103 5.0 6.5	■ ● - ● ② - 260 140 185 103 5.0 6.5	■ ● - ● ② - 260 140 185 103 5.0 6.5
	■ ■ ● ●	■ ■ ● ●	■ ■ ● ●	■ ■ ● ●	■ ■ ● ●	■ ■ ● ●	■ ■ ● ●	■ ■ ● ●	■ ■ ● ●	■ ■ ● ●	■ ■ ● ●	■ ■ ● ●	■ ■ ● ●
	4,500 15,000												

① MCCB cannot be used in IT systems at this voltage.

② Not fully rated at 50°C refer to Temperature Ratings Pages 168 169

RATINGS AND SPECIFICATIONS

TEMBREAK 2 MOULDED CASE CIRCUIT BREAKERS

MCCB Electrical Characteristics to IEC 60947-2, EN 60947-2, JIS C 8201-2-1 ANN.1, AS/NZS 3947-2, NEMA AB-1

Frame reference	Quantity	Unit	Condition	TB2 H/L 800	
Max In (A) of Frame				**800**	
Model				H800	L800
Number of Poles				3, 4	3, 4
Type				NE	NE
Nominal current ratings					
	I_n	(A)	50°C	630 800	630 800
Electrical characteristics					
Rated operational voltage	U_e	(V)	AC 50/60 Hz DC	690 -	690 -
Rated insulation voltage	U_i	(V)		800	800
Rated impulse withstand voltage	U_{imp}	(kV)		8	8
Ultimate breaking capacity (IEC, JIS, AS/NZS)	I_{cu}	(kA)	690V AC 525V AC 440V AC 400/415V AC 220/240V AC 250V DC	25⑧ 40 125 125 150 -	25⑧ 45 180 200 200 -
Service breaking capacity (IEC, JIS, AS/NZS)	I_{cs}	(kA)	690V AC 525V AC 440V AC 400/415V AC 220/240V AC 250V DC	20⑧ 34 94 94 150 -	20⑧ 34 135 150 150 -
Rated breaking capacity (NEMA)		(kA)	480V AC 240V AC	40 150	45 200
Rated short-time withstand current	I_{cw}	(kA)	0.3 Seconds	10	10
Protection					
Adjustable thermal, adjustable magnetic				■	■
Fixed thermal, fixed magnetic					
Microprocessor					
Utilisation category				B	B
Installation					
Front connection (FC)				-	-
Extension bar (FB)				■	■
Cable clamp (FW				-	-
Rear connection (RC)				•	•
Plug-in (PM)				•	•
DIN rail mounting (DA)				-	-
Dimensions	height	(mm)		273	273
	width	(mm)	3 pole	210	210
			4 pole	280	280
	depth	(mm)		140	140
Weight	weight	(kg)	3 pole	⑥	⑥
			4 pole	⑦	⑦
Operation					
Direct Opening Action				■	■
Toggle operation				■	■
Door mounted (HS) / Breaker mounted handle (HB)				•	•
Motor operation (MC)				•	•
Endurance	Electrical		690V AC		
	Mechanical	cycles		4,000	
		cycles		10,000	

■ Standard • Optional - Not Available

RATINGS AND SPECIFICATIONS

	TB2 1000							TB2 1250			TB2 1600	
	1000							**1250**			**1600**	
	S800	S800	S800	S800	S800	S1000	S1000	S1250	S1250	S1250	S1600	S1600
	3, 4 CJ	3, 4 NJ	3, 4 RJ	3, 4 NE	3, 4 RE	3, 4 SE	3, 4 NE	3, 4 SE	3, 4 NE	3, 4 GE	3, 4 SE	3, 4 NE
	630 800	630 800	630 800	630 800	630 800	1000⑨	1000⑨	1250	1250	1250	1600	1600
	690 250 800 8	690 250 800 8	690 250 800 8	690 - 800 8	690 - 800 8	690 - 800 8	690 - 800 8	690 - 800 8	690 - 800 8	690 - 800 8	690 - 800 8	690 - 800 8
	10⑧ 15⑧ 30	20⑧ 30 50	25⑧ 45 65	20⑧ 30 50	25⑧ 35 65	20⑧ 30 45	25⑧ 45 65	20⑧ 30 45	25⑧ 45 65	45⑧ 65 85	20⑧ 30 45	45⑧ 65 85
	36	50	70	50	70	50	70	50	70	100/85①	50	100/85①
	50 50	85 50	100 50	85 -	100 -	85 -	100 -	85 -	100 -	125 -	85 -	125 -
	10⑧ 15⑧ 30	20⑧ 30 50	20⑧ 34 50	20⑧ 30 50	20⑧ 30 50	15⑧ 23 34	20⑧ 34 50	15⑧ 23 34	20⑧ 34 50	34⑧ 50 65	15⑧ 23 34	34⑧ 50 65
	36	50	50	50	50	38	50	38	50	75/65②	38	75/65②
	50 50	85 50	75 50	85 -	75 -	65 -	75 -	65 -	75 -	94 -	65 -	94 -
	15 50	30 85	45 100	30 85	35 100	30 85	45 100	30 85	45 100	65 125	30 85	65 125
	-	-	-	10	10	-	-	15	15	15	20	20
	■ A	■ A	■ A	■ B	■ B	■ A	■ A	■ B	■ B	■ B	■ B	■ B
	■ • •③ • • -	■ • •③ • • -	■ • •③ • • -	■ • •③ • • -	■ • •③ • • -	- ■ - • - -	- ■ - • - -	- ■ - • • -	- ■ - • • -	- ■ - • • -	- • - ■ - -	- • - ■ - -
	273 210 280 103 8.5 11.5	273 210 280 103 8.5 11.5	273 210 280 103 8.5 11.5	273 210 280 103 ④ ⑤	273 210 280 103 ④ ⑤	273 210 280 103 11.0 14.8	273 210 280 103 11.0 14.8	370 210 280 120 19.8 25.0	370 210 280 120 19.8 25.0	370 210 280 120 19.8 25.0	370 210 280 140 27.0 35.0	370 210 280 140 27.0 35.0
	■ ■ • •	■ ■ • •	■ ■ • •	■ ■ • •	■ ■ • •	■ ■ • •	■ ■ • •	■ ■ • •	■ ■ • •	■ ■ • •	■ ■ • •	■ ■ • •
				4,000 10,000				4,000 5,000			2,000 5,000	

① 100KA at 400V
② 75KA at 400V
③ 630A only
④ 8.7kg 630A, 9.1kg 800A
⑤ 11.9kg 630A, 12.3kg 800A
⑥ 13.3kg 630A, 14.8kg 800A
⑦ 16.8kg 630A, 18.8kg 800A
⑧ MCCB cannot be used in IT systems at this voltage
⑨ Not fully rated at 50ºC, refer to temperature ratings pages 168 -169

RATINGS AND SPECIFICATIONS

TEMBREAK MOULDED CASE CIRCUIT BREAKERS

MCCB Electrical Characteristics to IEC 60947-2, EN 60947-2, JIS C 8201-2-1 ANN.1, AS/NZS 3947-2, NEMA AB-1

Frame reference	Quantity	Unit	Condition	TB 3200	
Max In (A) of Frame				**3200**	
Model				XS2000	XS2500
Number of Poles				3, 4	3, 4
Type				NE	NE
Nominal current ratings					
	I_n	(A)	50°C	2000	2500
Electrical characteristics					
Rated operational voltage	U_e	(V)	AC 50/60 Hz	690	690
	U_i	(V)		690	690
Rated insulation voltage	U_{imp}	(kV)		8	8
Rated impulse withstand voltage					
Ultimate breaking capacity (IEC, JIS, AS/NZS)	I_{cu}	(kA)	690V AC	45①	45①
			525V AC	65①	65①
			440V AC	85	85
			400/415V AC	100/85	100/85
			220/240V AC	125	125
			250V DC	-	-
Service breaking capacity (IEC, JIS, AS/NZS)	I_{cs}	(kA)	690V AC	42①	42
			525V AC	49①	49
			440V AC	64	64
			400/415V AC	75/64	75/64
			220/240V AC	94	94
			250V DC	-	-
Rated short-time withstand current	I_{cw}	(kA)	0.3 Seconds	42	42
Protection					
Adjustable thermal, adjustable magnetic					
Fixed thermal, fixed magnetic					
Microprocessor				■	■
Utilisation category				B	B
Installation					
Front connection (FC)				-	-
Extension bar (FB)				•	-
Cable clamp (FW				-	-
Rear connection (RC)				■	■
Plug-in (PM)				-	-
DIN rail mounting (DA)				-	-
Dimensions	height	(mm)		450	450
	width	(mm)	3 pole	320	320
			4 pole	429	429
	depth	(mm)		185	185
Weight	weight	(kg)	3 pole	54	63
			4 pole	67	78
Operation					
Direct Opening Action				-	-
Toggle operation				■	■
Door mounted (HS) / Breaker mounted handle (HB)				OHE TYPE	OHE TYPE
Motor operation (MC)				•	•
Endurance	Electrical	cycles	690V AC	500	500
	Mechanical	cycles		2500	2500

■ Standard • Optional - Not Available

	TB 3200
	3200
	XS3200
	3 NE
	3200
	690 690 8
	45① 65 85 100/65 125 -
	42① 50 65 75/65 94 -
	38 (0.5s)
	■ B
	- - - ■ - - 450 320 - 185 65 -
	- ■ OHE TYPE • 500 2500

① MCCB cannot be used in IT systems at this voltage

RATINGS AND SPECIFICATIONS

TEMBREAK 2 CIRCUIT BREAKERS WITH ICU = 70KA @ 690V AC

MCCB Electrical Characteristics to IEC 60947-2, EN60947-2, JIS C 8201-2-1 ANN.1, AS/NZS 3947-2

Frame Reference	Quantity	Unit	Condition	TB2 H/L 250	TB2 H/L 400	TB2 H/L 800
Maximum In (A) of Frame				**250**	**400**	**800**
Model				L125	L400	L800
Number of Poles				3	3	3
Type				PJ	PE	PE
Nominal current Ratings						
	I_n	(A)	50°C	25,32,50,60, 100,125	250,400	630,800
Electrical characteristics						
Rated operational voltage	U_e	(V)	AC 50/60 Hz	690	690	690
Rated insulation voltage	U_i	(V)		800	800	800
Rated impulse voltage	U_{imp}	(kV)		8	8	8
Ultimate breaking capacity (IEC, JIS,AS/NZS)	I_{cu}	(kA)	690V AC	70	70	70
Service breaking capacity (IEC, JIS,AS/NZS)	I_{cs}	(kA)	690V AC	33	50	50
Rated short-time withstand	I_{cw}	(kA)	0.3 Seconds	-	5	10
Protection						
Adjustable thermal, adjustable magnetic				■	■	■
Microprocessor						
Utilisation Category				A	B	B
Installation						
Front Connection (FC)				■	-	-
Extension Bar (FB)				•	-	-
Cable Clamp (FW)				-	-	-
Rear Connection (RC)				•	■	■
Plug-in (PM)				•	•②	•②
Din Rail Mounting (DA)				-	-	-
Dimensions:	height	(mm)	3 pole	165	260	273
	width	(mm)		105	140	210
	depth	(mm)		103	140	140
Weight	weight	(kg)	3 pole	2.4	7.1	①
Operation						
Direct Opening Action				■	■	■
Toggle operation				■	■	■
Door mounted (HS)/ Breaker mounted handle (HB)				•	•	•
Motor operation				•	•	•
Endurance	Electrical	cycles	690V AC	1,000	1,000	500
	Mechanical	cycles		7,000	4,000	2,500

① 13.3kg/630A, 14.8kg/800A ② Refer temperature rating table pages 168 - 169

■ Standard • Optional - Not Available

TEMBREAK 2 CIRCUIT BREAKERS FOR 1000V AC

MCCB Electrical Characteristics to IEC 60947-2, EN60947-2, JIS C 8201-2-1 ANN.1

Frame Reference	Quantity	Unit	Condition	TB2 S 125		TB2 S250
Maximum In (A)				**125**		**250**
Model				VS125		VS250
Number of Poles				3		3
Type				NJ		NJ
Nominal current ratings						
	I_n	(A)	50°C	20,32	50,63,100 125	160,250
Electrical characteristics:						
Rated operational voltage	U_e	(V)	AC 50/60 Hz	1100	1100	1100
Rated insulation voltage	U_i	(V)		1100	1100	1100
Rated impulse voltage	U_{imp}	(kV)		8	8	8
Ultimate breaking capacity (IEC, JIS,AS/NZS)	I_{cu}	(kA)	1100V AC	4	6	6
Service breaking capacity (IEC, JIS,AS/NZS)	I_{cs}	(kA)	1100V AC	4	4	4
Protection						
Adjustable thermal, adjustable magnetic				■	■	■
Utilisation Category				A	A	A
Installation						
Front Connection (FC)				■	■	■
Extension Bar (FB)				•	•	•
Cable Clamp (FW)				•	•	•
Rear Connection (RC)				•	•	•
Plug-in (PM)				•	•	•
Din Rail Mounting (DA)				-	-	-
Dimensions:	height	(mm)	3 pole	155	155	165
	width	(mm)		90	90	105
	depth	(mm)		68	68	68
Weight	weight	(kg)	3 pole	1.1	1.1	1.5
Operation:						
Direct Opening Action				■	■	■
Toggle operation				■	■	■
Door mounted (HS)/ Breaker mounted handle (HB)				•	•	•
Motor operation				•	•	•
Endurance	Electrical	cycles	1100V AC	1,000	1,000	1,000
	Mechanical	cycles		7,000	7,000	7,000

CIRCUIT BREAKERS FOR 1000V AC ARE AVAILABLE UP TO 1250A. ASK FOR DETAILS.

RATINGS AND SPECIFICATIONS

TEMBREAK 2 LITE MOULDED CASE CIRCUIT BREAKERS

MCCB Electrical Characteristics to IEC 60947-2, EN60947-2, JIS C 8201-2-1 ANN.1, NEMA AB-1

Frame Reference	Quantity	Unit	Condition	TB2 Lite 160	
Max in (A) of Frame				**160**	**160**
Model				E160	E160
Number of Poles				1	3,4
Type				SF	SF
Nominal current ratings					
	I_n	(A)	50°C	16,20,25,32, 40,50,63,80, 100,125	16,20,25, 32,40,50, 63,80,100, 125,160
Electrical characteristics					
Rated operational voltage	U_e	(V)	AC 50/60 Hz	240	525
			DC	-	250
Rated insulation voltage	U_i	(V)		690	690
Rated impulse withstand voltage	U_{imp}	(kV)		8	8
Ultimate breaking capacity (IEC, JIS, AS/NZS)	I_{cu}	(kA)	690V AC	-	-
			525V AC	-	6
			440V AC	-	10
			400/415V AC	-	16
			220/240V AC	25	25
			250V DC	-	13
Service breaking capacity (IEC, JIS, AS/NZS)	I_{cs}	(kA)	690V AC	-	-
			525V AC	-	3
			440V AC	-	5
			400/415V AC	-	8
			220/240V AC	13	13
			250V DC	-	7
Rated breaking capacity (NEMA)		(kA)	480V AC	-	6
			240VAC	25	25
Protection					
Fixed thermal, fixed magnetic				■	■
Adjustable thermal, fixed magnetic				-	-
Utilisation category				A	A
Installation					
Front connection (FC)				■	■
Extension bar (FB)				●	●
Cable clamp (FW)				■ ①	-
Rear connection (RC)				-	●
Plug-in (PM)				-	-
DIN rail mounting (DA)				-	●
Dimensions	height	(mm)		130	130
	width	(mm)	3 pole, (1 pole)	(25)	75
			4 pole	-	100
	depth	(mm)		68	68
Weight	weight	(kg)	3 pole, (1 pole)	(0.3)	0.8
			4 pole	-	1.0
Operation					
Direct Opening Action				■	■
Toggle operation				■	■
Door mounted (HS) / Breaker mounted handle (HB)				-	●
Motor operation				-	-
Endurance	Electrical	cycles	415V AC	10,000	10,000②
	Mechanical	cycles		20,000	20,000

■ Standard ● Optional - Not Available

TB2 Lite 160					
	160				
	E160	S160	S160	S160	S160
	3, 4 SJ	3, 4 SCF	3, 4 SCJ	3, 4 SF	3, 4 SJ
	25,40,63,80 100,125,160	16,20,25,32 40,50,63,80, 100,125,160	25,40,63,80, 100,125,160	16,20,25,32 40,50,63,80, 100,125,160	25,40,63,80 100,125,160
	525 250 690 8	525 250 690 8	525 250 690 8	690 250 690 8	690 250 690 8
	- 6 10 16 25 13	- 7.5 15 25 35 20	- 7.5 15 25 35 20	6 10 25 40 50 25	6 10 25 40 50 25
	- 3 5 8 13 7	- 4 7.5 13 18 10	- 4 7.5 13 18 10	3 7.5 13 20 25 13	3 7.5 13 20 25 13
	6 25	7.5 35	7.5 35	10 50	10 50
	- ■ A	■ - A	- ■ A	■ - A	- ■ A
	■ ● ■ ① ● - ● 130 75 100 68 0.8 1.0	■ ● - ● - ● 130 75 100 68 0.8 1.0	■ ● ■ ① ● - ● 130 75 100 68 0.8 1.0	■ ● - ● - ● 130 75 100 68 0.8 1.0	■ ● ■ ① ● - ● 130 75 100 68 0.8 1.0
	■ ■ ● - 10,000② 20,000	■ ■ ● - 10,000② 20,000	■ ■ ● - 10,000② 20,000	■ ■ ● - 10,000② 20,000	■ ■ ● - 10,000② 20,000

① Factory-fit at time of order
② 14,000 ≤125A

RATINGS AND SPECIFICATIONS

TEMBREAK 2 LITE MOULDED CASE CIRCUIT BREAKERS

MCCB Electrical Characteristics to IEC 60947-2, EN60947-2, JIS C 8201-2-1 ANN.1, NEMA AB-1

Frame Reference	Quantity	Unit	Condition	TB2 Lite 250	
Max In (A) of Frame				**250**	
Model				E250	E250
Number of Poles				3, 4	3, 4
Type				SCF	SCJ
Nominal current ratings					
	I_n	(A)	50°C	125,150,175 200,225, 250	100,125, 160,200 250
Electrical characteristics					
Rated operational voltage	U_e	(V)	AC 50/60 Hz	525	525
			DC	250	250
Rated insulation voltage	U_i	(V)		690	800
Rated impulse voltage	U_{imp}	(kV)		8	8
Ultimate breaking capacity (IEC, JIS, AS/NZS)	I_{cu}	(kA)	690V AC	-	-
			525V AC	6	6
			440V AC	10	10
			400/415V AC	16	16
			220/240V AC	25	25
			250V DC	13	13
Service breaking capacity (IEC, JIS, AS/NZS)	I_{cs}	(kA)	690V AC	-	-
			525V AC	3	3
			440V AC	5	5
			400/415V AC	8	8
			220/240V AC	13	13
			250V DC	7	7
Rated breaking capacity (NEMA)		(kA)	480V AC	6	6
			240VAC	25	25
Protection					
Fixed thermal, fixed magnetic				■	-
Adjustable thermal, adjustable magnetic				-	■
Utilisation category				A	A
Installation					
Front connection (FC)				■	■
Extension bar (FB)				●	●
Cable clamp (FW)				●	●
Rear connection (RC)				●	●
Plug-in (PM)				-	-
DIN rail mounting (DA)				-	-
Dimensions	height	(mm)		165	165
	width	(mm)	3 pole	105	105
			4 pole	140	140
	depth	(mm)		68	68
Weight	weight	(kg)	3 pole	1.5	1.5
			4 pole	1.9	1.9
Operation					
Direct Opening Action				■	■
Toggle operation				■	■
Door mounted (HS) / Breaker mounted handle (HB)				●	●
Motor operation				●	●
Endurance	Electrical	cycles	415V AC	6,000	6,000
	Mechanical	cycles		18,000	18,000

■ Standard ● Optional - Not Available

TB2 Lite 250				
	250			
	E250	E250	S250	S250
	3, 4 SF	3, 4 SJ	3, 4 SF	3, 4 SJ
	125,150,175 200,225, 250	100,125,160 200,250	125,150,175 200,225, 250	160,200 250
	525 250 690 8	525 250 800 8	690 250 690 8	690 250 800 8
	- 7.5 15 25 35 15	- 7.5 15 25 35 15	4 10 30 40 85 25	4 10 30 40 85 25
	- 6 12 19 27 12	- 6 12 19 27 12	4 7.5 15 20 43 13	4 7.5 15 20 43 13
	10 35	10 35	25 85	25 85
	■ - A	- ■ A	■ - A	- ■ A
	■ ● ● ● - - 165 105 140 68 1.5 1.9	■ ● ● ● - - 165 105 140 68 1.5 1.9	■ ● ● ● - - 165 105 140 68 1.5 1.9	■ ● ● ● - - 165 105 140 68 1.5 1.9
	■ ■ ● ● 6,000 18,000	■ ■ ● ● 6,000 18,000	■ ■ ● ● 6,000 18,000	■ ■ ● ● 6,000 18,000

RATINGS AND SPECIFICATIONS

TEMBREAK 2 CIRCUIT BREAKERS WITH INTEGRAL RESIDUAL CURRENT PROTECTION (CBR) MCCB Electrical Characteristics to IEC 60947-1, IEC 60947-2, IEC 60947-2 ANNEX B, IEC 60755

Frame reference	Quantity	Unit	Condition	
Maximum In (A) of Frame				
Model Number of Poles Type				
Nominal current ratings				
	I_n	(A)	50°C	
Electrical characteristics				
Rated operational voltage Rated insulation voltage Rated impulse voltage	U_e U_i U_{imp}	(V) (V) (kV)	AC 50/60 Hz	
Ultimate breaking capacity (IEC, JIS,AS/NZS)	I_{cu}	(kA)	525V AC 440V AC 400/415V AC 220/240V AC	
Service breaking capacity (IEC, JIS,AS/NZS)	I_{cu}	(kA)	525V AC 440V AC 400/415V AC 220/240V AC	
Protection				
Adjustable thermal, fixed magnetic Residual current protection, Type A Utilisation Category				
Installation				
Front Connection (FC) Extension Bar (FB) Cable Clamp (FW) Rear Connection (RC) Plug-in (PM) Din Rail Mounting (DA) Dimensions:	height width	(mm) (mm)	3 pole 4 pole	
	depth	(mm)		
Weight	weight	(kg)	3 pole 4 pole	
Operation				
Direct Opening Action Toggle operation Door mounted (HS)/ Breaker mounted handle (HB) Motor operation Residual Current Monitor and Remote Trip Module				
Endurance	Electrical Mechanical	cycles cycles	415V AC	

■ Standard • Optional - Not Available

	TB2 S125			TB2 S250		
	125			**250**		
	ZE125	ZS125	ZS125	ZE250	ZS250	ZS250
	3,4 NJ	3,4 NJ	3,4 GJ	3,4 NJ	3,4 NJ	3,4 GJ
	20,32 50,63 100,125	20,32 50,63 100,125	20,32 50,63 100,125	160,250	160,250	160,250
	525 525 8	525 525 8	525 525 8	525 525 8	525 525 8	525 525 8
	8 15 25 35	22 25 36 50	25 50 65 85	10 15 25 35	25 25 36 65	25 50 65 85
	6 12 19 27	22 25 36/30 50	22 25 36/33 85	7.5 12 19 27	25 25 36 65	25 25 36 85
	■ ■ A	■ ■ A	■ ■ A	■ ■ A	■ ■ A	■ ■ A
	■ • • • - • 155 90 120 68 1.1 1.4	■ • • • - • 155 90 120 68 1.1 1.4	■ • • • - • 155 90 120 68 1.1 1.4	■ • • • - • 165 105 140 68 1.5 1.9	■ • • • - • 165 105 140 68 1.5 1.9	■ • • • - • 165 105 140 68 1.5 1.9
	■ ■ • • •	■ ■ • • •	■ ■ • • •	■ ■ • • •	■ ■ • • •	■ ■ • • •
	30,000 30,000			10,000 10,000		

RATINGS AND SPECIFICATIONS

MOULDED CASE CIRCUIT BREAKERS FOR USE ABOVE 250V DC

MCCB Electrical Characteristics to IEC 60947-2, EN60947-2, JIS C 8201-2-1 ANN.1

Frame reference	Quantity	Unit	Condition	TB2 Lite 160	
Max In (A) of Frame				**160**	
Model				S160	S160
Number of Poles				3	3
Type				SD	GD
Nominal current ratings					
	I_n	(A)	50°C	25,32,40, 63,80,100, 125,160	25,32,40, 63,80,100, 125,160
Electrical characteristics					
Rated insulation voltage	U_i	(V)	AC 50/60 Hz	690	690
Rated impulse voltage	U_{imp}	(kV)		8	8
Ultimate breaking capacity (IEC, JIS)	I_{cu}	(kA)	1000V DC①②	-	-
			750V DC①②	-	-
			600V DC①②	5	10
			500V DC①②	7.5	15
			350V DC①②	10	-
Service breaking capacity (IEC, JIS)	I_{cs}	(kA)	1000V DC①②	-	-
			750V DC①②	-	-
			600V DC①②	5	5
			500V DC①②	7.5	7.5
			350V DC①②	10	-
Protection					
Adjustable thermal, fixed magnetic				■	■
Magnetic trip only (adjustable)					
Installation					
Front connection (FC)				■	■
Extension bar (FB)				•	•
Rear connection (RC)				•	•
Plug-in (PM)				-	-
DIN rail mounting (DA)				-	-
Dimensions	height	(mm)		130+50③	130+50③
	width	(mm)	3 pole	75	75
			4 pole	-	-
	depth	(mm)		68	68
	weight	(kg)	3 pole	0.8	0.8
Weight			4 pole	-	-
Operation					
Direct Opening Action				■	■
Toggle operation				■	■
Breaker mounted (HB)				•	•
Door mounted (HS)				•	•
Motor operation				-	-
Endurance	Electrical	cycles	1000V DC	-	-
			750V DC		
			350 - 600V DC	1,000	1,000
	Mechanical	cycles	-	7,000	7,000

■ Standard • Optional - Not Available

	TB2 Lite 250		TB2 S250			
	250		**250**			
	S250	S250	PVS160	PVS160	PVS250	PVS250
	3	3	3(4)	4	3(4)	4
	SD	GD	SDL	SDH	SDL	SDH
	100,125 160,200, 250	100,125 160,200, 250	50 63 100 125 160	50 63 100 125 160	100 125 160 200 250	100 125 160 200 250
	800 8	800 8	800 8	1000 8	800 8	1000 8
	- - 5 7.5 10	- - 10 15 -	- 5(10)	5 -	- 5(10)	5 -
	- - 5 7.5 10	- - 5 7.5 -	- 5(5) - - -	5 - - - -	- 5(5) - - -	5 - - - -
	■	■	■	■	■	■
	■ ● ● - - 165+55③ 105 - 68 1.5 -	■ ● ● - - 165+55③ 105 - 68 1.5 -	■ ● ● - - 165+55 x 2③ 105 140 68 1.5 1.9	■ ● ● - - 165+55 x 2③ - 140 68 - 1.9	■ ● ● - - 165+55 x 2③ 105 140 68 1.5 1.9	■ ● ● - - 165+55 x 2③ - 140 68 - 1.9
	■ ■ ● ● ● - - 1,000 7,000	■ ■ ● ● ● - - 1,000 7,000	■ ■ ● ● ● - 1,000 - 7,000	■ ■ ● ● ● 1,000 - - 7,000	■ ■ ● ● ● - 1,000 - 7,000	■ ■ ● ● ● 1,000 - - 7,000

① Connect all poles in series when over DC250V
② The time constant (L/R) of the circuit should be less than 2.0ms nearby rated current less than 5ms for short circuit < 10kA less than 10ms for short circuit < 20kA less than 15ms for short circuit > 20kA
③ Includes the dimensions of the terminal cover (Mandatory)

RATINGS AND SPECIFICATIONS

MOULDED CASE CIRCUIT BREAKERS FOR USE ABOVE 250V DC

MCCB Electrical Characteristics to IEC 60947-2, EN60947-2, JIS C 8201-2-1 ANN.1

Frame reference	Quantity	Unit	Condition	TB2 E/S 400	TB2 H/L 400
Max In (A) of Frame				**400**	**400**
Model				S400	PVS400
Number of Poles				3	3 (4)
Type				ND	NDL
Nominal current ratings					
	I_n	(A)	50°C	250,400	250,400
Electrical characteristics					
Rated insulation voltage	U_i	(V)	AC 50/60 Hz	800	800 (1150)
Rated impulse voltage	U_{imp}	(kV)		8	8
Ultimate breaking capacity (IEC, JIS)	I_{cu}	(kA)	1000V DC①②	-	-
			750V DC①②	-	10
			600V DC①②	15	-
			500V DC①②	15	-
			350V DC①②	20	-
Service breaking capacity (IEC, JIS)	I_{cs}	(kA)	1000V DC①②	-	-
			750V DC①②	-	5 (10)
			600V DC①②	15	-
			500V DC①②	15	-
			350V DC①②	20	-
Protection					
Fixed thermal, fixed magnetic				■	■
Adjustable thermal, fixed magnetic					
Magnetic trip only (adjustable)					
Installation					
Front connection (FC)				■	■
Extension bar (FB)				•	•
Rear connection (RC)				•	•
Plug-in (PM)				-	-
DIN rail mounting (DA)				-	-
Dimensions	height	(mm)		260	260
	width	(mm)	3 pole	140	140
			4 pole	-	185
	depth	(mm)		103	103
	weight	(kg)	3 pole	4.2	4.2
Weight			4 pole	-	5.6
Operation					
Direct Opening Action				■	■
Toggle operation				■	■
Breaker mounted (HB)				•	•
Door mounted (HS)				•	•
Motor operation				•	•
Endurance	Electrical	cycles	1000V DC	-	-
			750V DC	-	1,000
			350 - 600V DC	1,000	-
	Mechanical	cycles	-	4,000	4,000

	TB2 H/L 400	TB2 H/L 800		TB2 1000		TB 1250	TB 1600	TB 3200		
	400	**800**		**800**	**1000**	**1250**	**1600**	**3200**		
	PVS400	PVS800	PVS800	S800	S1000	XS1250	XS1600	XS2000	XS2500	XS3200
	4	3 (4)	4	3	3	3	3	3	3	3
	NDH	NDL	NDH	ND	ND	ND	ND	ND	ND	ND
	250,400	630,800	630,800	630,800	1,000	1250	1600	2000	2500	3200
	1150 8	800 (1150) 8	1150 8	800 8	800 8	690 8	690 8	690 8	690 8	690 8
	5 - - - -	- 10 - - -	5 - - - -	- - 20 20 30	- - 20 20 30	- 20 50 50	- 20 50 50	- 20 50 50	- 20 50 50	- 20 50 50
	5 - - - -	- 10 - - -	5 - - - -	- - 10 10 15	- - 10 10 15	- - 15 25 25	- - 15 25 25	- - 15 25 25	- - 15 25 25	- - 15 25 25
	■	■	■	■	■	■	■	■	■	■
	■ ● ● - - 260 - 185 103 - 5.6	- ■ ● - - 273 210 280 103 8.5 11.5	- ■ ● - - 273 - 280 103 - 11.5	- ■ ● - - 273 210 - 103 8.5 -	- ■ ● - - 273 210 - 103 10.8 -	- ■ ● - - 370 210 - 140 26.0 -	- ● ■ - - 370 210 - 140 27.0 -	- ● ■ - - 450 320 - 185 54.0 -	- - ■ - - 450 320 - 185 62.5 -	- - ■ - - 450 320 - 185 62.5 -
	■ ■ ● ● ● - 1,000 - 4,000	■ ■ ● ● ● - 500 - 2,500	■ ■ ● ● ● 500 - - 2,500	■ ■ ● ● ● - - 500 2,500	■ ■ ● ● ● - - 500 2,500	■ ■ ● ● ● - - 500 2,500	■ ■ ● ● ● - - 500 2,500	- ■ - ●③ ● - - 500 2,500	- ■ - ●③ ● - - 500 2,500	- ■ - ●③ ● - - 500 2,500

① Connect all poles in series when over DC250V
② The time constant (L/R) of the circuit should be less than 2.0ms nearby rated current less than 5ms for short circuit < 10kA less than 10ms for short circuit < 20kA less than 15ms for short circuit > 20kA
③ Fixed Depth (not adjustable)

RATINGS AND SPECIFICATIONS

SWITCH-DISCONNECTORS FOR USE ABOVE 250V DC

MCCB Electrical Characteristics to IEC 60947-3, EN60947-3, JIS C 8201-3

Frame reference	Quantity	Unit	Condition	TB2 Lite 160	TB2 Lite 250
Max In (A) of Frame				**160**	**250**
Model				S160	S250
Number of Poles				3	3
Type				SDN	SDN
Nominal current ratings					
	I_n	(A)		160	250
Electrical characteristics					
Rated operational voltage	U_e	(V)	DC	600	600
Rated insulation voltage	U_i	(V)	AC 50/60 Hz	690	800
Rated impulse voltage	U_{imp}	(kV)		8	8
Rated short circuit making capacity	I_{cm}	(kA peak)		2	3
Rated short-time withstand current	I_{cw}	(kA rms)	0.3 seconds	2	3
Utilisation category to IEC 60947-3 ①②			DC	DC-22A	DC-22A
Installation					
Front connection (FC)				■	■
Extension bar (FB)				•	•
Rear connection (RC)				•	•
Plug-in (PM)				-	-
DIN rail mounting (DA)				•	-
Dimensions	height	(mm)		130	165
	width	(mm)	3 pole	75	105
			4 pole	-	-
	depth	(mm)		68	68
Weight	weight	(kg)	3 pole	0.8	1.5
			4 pole	-	-
Operation					
Direct Opening Action				■	■
Toggle operation				■	■
Breaker mounted handle (HB)				•	•
Door mounted (HS)				•	•
Motor operation				-	•
Endurance	Electrical	cycles	1000V DC	-	-
			800V DC	-	-
			600V DC	1,000	1,000
	Mechanical	cycles		7,000	7,000

■ Standard • Optional - Not Available

	TB2 S250				TB2 H/L 400		TB2 H/L 800	
	250				**400**		**800**	
	PVS160	PVS160	PVS250	PVS250	PVS400	PVS400	PVS800	PVS800
	4	4	4	4	4	4	4	4
	SNL	SNH	SNL	SNH	NNL	NNH	NNL	NNH
	160	160	250	250	400	400	630 800	630 800
	800 800 8	1000 1000 8	800 800 8	1000 1000 8	800 1150 8	1000 1150 8	800 1150 8	1000 1150 8
	3 3 DC-22A	3 3 DC-22A	3 3 DC-22A	3 3 DC-22A	9 5 DC-22A	9 5 DC-22A	17 10 DC-22A	17 10 DC-22A
	■ • • - - 165+55 x 2③ - 140 68 - 1.9	■ • • - - 165 + 55 x 2③ - 140 68 - 1.9	■ • • - - 165+55 x 2③ - 140 68 - 1.9	■ • • - - 165+55 x 2③ - 140 68 - 1.9	■ • • - - 260 - 185 103 - 5.6	■ • • - - 260 - 185 103 - 5.6	- ■ • - - 273 - 280 103 - 11.5	- ■ • - - 273 - 280 103 - 11.5
	■ ■ • • • - 1,000 - 7,000	■ ■ • • • 1,000 - - 7,000	■ ■ • • • - 1,000 - 7,000	■ ■ • • • 1,000 - - 7,000	■ ■ • • • - 1,000 - 4,000	■ ■ • • • 1,000 - - 4,000	■ ■ • • • - 500 - 2,500	■ ■ • • • 500 - - 2,500

① Connect all poles in series.
② The time constant (L/R) of the circuit should be less than 2.0ms nearby rated current less than 5ms for short circuit < 10kA less than 10ms for short circuit < 20kA less than 15ms for short circuit > 20kA
③ Includes the dimensions of the terminal cover (mandatory).

RATINGS AND SPECIFICATIONS

SWITCH-DISCONNECTORS

MCCB Electrical Characteristics to IEC 60947-3, EN 60947-3, AS/NZS 60947-3

Frame reference	Quantity	Unit	Condition	TB2 Lite 160	TB2 Lite 250
Max In (A) of Frame				**160**	**250**
Model				S160	S250
Number of Poles				3, 4	3, 4
Type				SN	SN
Nominal current ratings					
	I_e	(A)		160	250
Electrical characteristics					
Rated operational voltage	U_e	(V)	AC 50/60 Hz	690	690
			DC	250	250
Rated insulation voltage	U_i	(V)		690	800
Rated impulse withstand voltage	U_{imp}	(kV)		8	8
Rated short-circuit making capacity	I_{cm}	(kA peak)		2.8	6
Rated short-time withstand current	I_{cw}	(kA rms)	0.3 Seconds	2	3
Utilisation category to IEC 60947-3			AC	AC-23A	AC-23A
			DC	DC-22A	DC-22A
Installation					
Front connection (FC)				■	■
Extension bar (FB)				•	•
Cable clamp (FW)				•	•
Rear connection (RC)				•	•
Plug-in (PM)				-	-
Draw-out (DR)				-	-
DIN rail mounting (DA)				•	-
Dimensions	height	(mm)	3 pole	130	165
	width	(mm)	4 pole	75	105
				100	140
	depth	(mm)		68	68
Weight	weight	(kg)	3 pole	0.7	1.5
			4 pole	0.9	1.9
Operation					
Direct Opening Action				■	■
Toggle operation				■	■
Door mounted (HS) / Breaker mounted handle (HB)				•	•
Motor operation (MC)				•	•
Endurance	Electrical	cycles	415V AC	10,000	6000
	Mechanical	cycles		20,000	18000

■ Standard • Optional - Not Available

	TBS S125	TB2 S250		TB2 E/S 630		TB2 1000		TB21250	TB2 1600
	125	**160**	**250**	**400**	**630**	**800**	**1000**	**1250**	**1600**
	S125 3, 4 NN	S160 3, 4 NN	S250 3, 4 NN	S400 3, 4 NN	S630 3, 4 NN	S800 3, 4 NN	S1000 3, 4 NN	S1250 3, 4 NN	S1600 3, 4 NN
	125	160	250	400	630	630 800	1000	1250	1600
	690 250 800 8 3.6 2 AC-23A DC-22A	690 250 800 8 6 3 AC-23A DC-22A	690 250 800 8 6 3 AC-23A DC-22A	690 250 800 8 9 5 AC-23A DC-22A	690 250 800 8 9 5③ AC-23A DC-22A	690 250 800 8 17 10 AC-23A DC-22A	690 250 800 8 17 10 AC-23A DC-22A	690 250 800 8 32 15 AC-23A DC-22A	690 250 800 8 45 20 AC-23A DC-22A
	■ • • • • - • 155 90 120 68 1.1 1.4	■ • • • • - - 165 105 140 68 1.5 1.9	■ • • • • - - 165 105 140 68 1.5 1.9	■ • • • • - - 260 140 185 103 4.2 5.6	■ • • • • ④ - - 260 140 185 103 4.4 5.8	■ • - • • - 273 210 280 103 ① ②	- ■ - • - - - 273 210 280 103 10.4 14.0	- ■ - • • • - 370 210 280 120 18.2 23.4	- • - ■ - • - 370 210 280 140 24.9 32.9
	■ ■ • • 30,000 30,000	■ ■ • • 10,000 30,000	■ ■ • • 10,000 30,000	■ ■ • • 4,500 15,000	■ ■ • • 4,500 15,000	■ ■ • • ← 4,000 10,000 →	■ ■ • • 	■ ■ • • 4,000 5,000	■ ■ • • 2,000 5,000

SWITCH DISCONNECTORS ARE AVAILABLE UP TO 2500A. ASK US FOR DETAILS.

① 8.0kg/630A, 8.5kg/800A
② 11.0kg/630A, 11.5kg/800A
③ 7.6kA/0.1sec.
④ Contact Terasaki for details.

CONTENTS

TEMBREAK 2 & TEMBREAK

MCCBS FROM 12A TO 3200A • MCCBS FOR 1000V AC
MCCBS FOR 1000V DC • MCCBS WITH INTEGRAL RCD
SWITCH DISCONNECTORS • MEASUREMENT AND DATA COMMUNICATION

RATINGS AND SPECIFICATIONS	SECTION 1
PROTECTION CHARACTERISTICS	SECTION 2
APPLICATION DATA	SECTION 3
ACCESSORIES	SECTION 4
INSTALLATION	SECTION 5
DIMENSIONS	SECTION 6
ORDER CODES	SECTION 7

PROTECTION CHARACTERISTICS

Frame Reference	TB2 Lite 160	TB2 Lite 250	TBS 125	TB2 S250	TB2 S/H/L 250	TB2 H/L 400	TB2 E/S 630
Max. In (A) of Frame	160	250	125	250	250	400	630
TEMBREAK 2 MOULDED CASE CIRCUIT BREAKERS			S125-NJ S125-GJ	S160-NJ S160-GJ S250-NJ S250-GJ	H125-NJ L125-NJ H160-NJ L160-NJ H250-NJ L250-NJ		E400-NJ S400-CJ S400-NJ S400-GJ S400-PJ
					S250-NE S250-GE S250-PE H250-NE	H400-NE L400-NE	S400-NE S400-GE S400-PE S630-CE E630-NE S630-NE S630-GE
TEMBREAK 2 CIRCUIT BREAKERS WITH Icu = 70KA AT 690V Ac					L125-PJ	L400-PE	
TEMBREAK 2 CIRCUIT BREAKERS FOR 1000V Ac			VS125-NJ	VS250-NJ			XV400NE②③
TEMBREAK 2 LITE SPACE SAVING, MONEY SAVING MOULDED CASE CIRCUIT BREAKERS	E160-SF S160-SCF S160-SF	E250-SCF E250-SF S250-SF					
	E160-SJ S160-SCJ S160-SJ	E250-SCJ E250-SJ S250-SJ					
TEMBREAK 2 CIRCUIT BREAKERS WITH INTEGRAL RESIDUAL CURRENT PROTECTION (CBR)			ZE125-NJ ZS125-NJ ZS125-GJ	ZE250-NJ ZS250-NJ ZS250-GJ			
CIRCUIT BREAKERS AND SWITCH-DISCONNECTORS FOR USE ABOVE 250V DC	S160-SD S160-GD S160-SDN	S250-SD S250-GD S250-SDN		PVS160-SDL③ PVS160-SDH③ PVS250-SDL③ PVS250-SDH③		PVS400-NDL PVS400-NDH	S400-ND 350V DC S400-ND 600V DC

■ Standard • Optional - Not Available

	TB2 H/L 800	TB2 1000	TB2 1250	TB2 1600	TB 3200	
	800	1000	1250	1600	3200	
		S800-CJ S800-NJ S800-RJ	S1250-SE S1250-NE S1250-GE	S1600-NE S1600-SE	XS2000NE②③ XS2500NE②③ XS3200NE②③	**TEMBREAK 2 ADJUSTABLE THERMAL AND ADJUSTABLE MAGNETIC PROTECTION** Pages 43 - 59
		S800-NE S800-RE				**ELECTRONIC PROTECTION** Pages 60 - 70
	H800-NE L800-NE	S1000-SE S1000-NE				
						ELECTRONIC PROTECTION WITH MEASUREMENT AND DATA COMMUNICATION① Pages 71 - 77
	L800-PE					**ELECTRONIC PROTECTION LET-THROUGH CHARACTERISTICS** Pages 78 - 87
		XV630PE②③ XV800PE②③	XV1250NE②③			
						TEMBREAK 2 LITE FIXED PROTECTION Pages 88 - 94
						TEMBREAK 2 LITE ADJUSTABLE PROTECTION Pages 95 - 101
						RESIDUAL (EARTH LEAKAGE) CURRENT PROTECTION Pages 102 - 104
	PVS800-NDL PVS800-NDH	S800-ND S1000-ND	XS1250ND②	XS1600ND②	XS2000ND② XS2500ND② XS3200ND②③	**DC PROTECTION** Pages 105 - 109

CONTENTS | SECTION 2

① Except L400-PE, L800-PE, S1250 and S1600
② TemBreak 1. Frame sizes vary from Tembreak 2.
③ Contact Terasaki for protection characteristics.

PROTECTION CHARACTERISTICS

TEMBREAK 2 ADJUSTABLE THERMAL AND ADJUSTABLE MAGNETIC PROTECTION

Thermal Magnetic trip units are especially suited to the following applications:

- Installations where harmonic distortion of current waveforms is likely.
  They operate inherently on the root mean square (rms) heating effect of current.
- DC circuits. Refer to section 3"MCCBs in DC SYSTEMS" for more information.

3 Pole MCCB with Adjustable Thermal and Adjustable Magnetic Characteristics

All standard 3 pole and 4 pole TemBreak 2 thermal magnetic models have adjustable thermal and adjustable magnetic characteristics.

Traditionally, thermal magnetic MCCBs have had adjustable thermal with fixed magnetic characteristics. The fixed magnetic element can limit the application of the MCCB.

An adjustable magnetic characteristic allows short-circuit protection to be matched to the load and supply characteristics, for example motor inrush currents or generator short-circuit currents. Lowering the short-circuit tripping threshold can allow a higher earth-loop impedance in an installation and provide end-of-cable protection with the correct disconnection times.

TEMBREAK 2 ADJUSTABLE THERMAL AND ADJUSTABLE MAGNETIC PROTECTION

Adjustable Dials

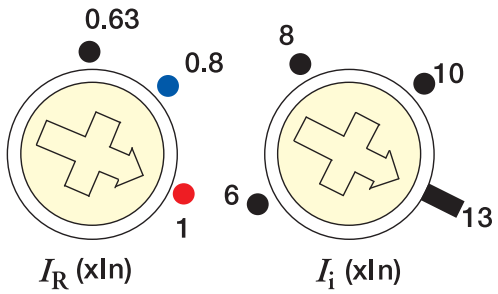

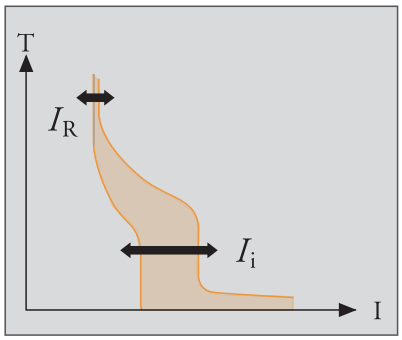

1. I_R is the thermal element adjustment dial and is used to set the rated current to match the conductor rating.

   I_R can be set between 0.63 and 1.0 times I_n.

2. I_i is the magnetic element adjustment dial and is used to set the short circuit tripping threshold to suit the application.

   I_i Can be set to the values shown in the table below:

Models, Types, Rated Currents and Magnetic trip current

Model	Type	Rated current I_n (A)	Magnetic trip current I_i (A)
S125	-NJ	20, 32, 50, 63, 100	6 – 12 ×I_n
		125	6 – 10 ×I_n
S125	-GJ	20, 32, 50, 63, 100	6 – 12 ×I_n
		125	6 – 10 ×I_n
H125	-NJ	20, 32, 50, 63, 100, 125	6 - 12 ×I_n
L125	-NJ	20, 32, 50, 63, 100, 125	6 – 12 ×I_n
VS125	-NJ	20, 32, 50, 63, 100	6 – 12 ×I_n
		125	6 – 10 ×I_n
L125	-PJ	20, 32, 50, 63, 100, 125	6 – 12 ×I_n
S160	-NJ	20, 32, 50, 63, 100, 125	6 – 12 ×I_n
		160	6 – 13 ×I_n
S160	-GJ	50, 63, 100, 125	6 – 12 ×I_n
		160	6 – 13 ×I_n
H160	-NJ	160	6 – 13 ×I_n
L160	-NJ	160	6 – 13 ×I_n
S250	-NJ	160, 200	6 – 13 ×I_n
		250	6 – 10 ×I_n
S250	-GJ	160, 200	6 – 13 ×I_n
		250 (225A for Plug-In)	6 – 10 ×I_n
H250	-NJ	160	6 – 13 ×I_n
		250 (225A for Plug-in)	6 – 10 ×I_n
L250	-NJ	160	6 – 13 ×I_n
		250 (225A for Plug-in)	6 – 10 ×I_n
VS250	-NJ	160	6 – 13 ×I_n
		250	6 – 10 ×I_n
E400	-NJ	250, 400	6 – 12 ×I_n
S400	-CJ	250, 400	6 – 12 ×I_n
S400	-NJ	250, 400	6 – 12 ×I_n
S400	-GJ	250, 400	6 – 12 ×I_n
S400	-PJ	250, 400	6 – 12 ×I_n
S800	-CJ	630, 800	5 – 10 ×I_n
S800	-NJ	630, 800	5 – 10 ×I_n
S800	-RJ	630, 800	5 – 10 ×I_n

PROTECTION CHARACTERISTICS

TEMBREAK 2 ADJUSTABLE THERMAL AND ADJUSTABLE MAGNETIC PROTECTION

Generator Protection

Generators may need specially modified protection characteristics, based on their short-circuit capability.

If a generator is capable of delivering short-circuit current greater than six times its full load current, a standard TemBreak 2 thermal magnetic MCCB may be used, with I_i set at less than the available short-circuit current. (Note that MCCBs, with fixed magnetic characteristics may not be suitable for this application.)

A thermal magnetic MCCB with low instantaneous protection may be used where the generator short-circuit current is less than six times its full load current. These are modified versions of the standard MCCB.

Four pole MCCBs with low instantaneous protection have protection on the neutral pole as standard. The magnetic characteristic of MCCBs with low instantaneous protection is fixed at the following values:

Model	Magnetic Trip Current
S125	$3x I_n$
S160	$3x I_n$
S250	$3x I_n$
E400	$3.5x I_n$
S400	$3.5x I_n$

Neutral Pole Protection

Neutral pole protection is available as an optional extra on four pole thermal magnetic MCCBs. The thermal and magnetic elements in the neutral pole are related to those in the phase poles as follows:

	Phase Trip Threshold	Neutral Trip Threshold
Thermal	I_r (adjustable)	I_N (adjustable)= I_n
Magnetic	I_i (adjustable)	I_i (adjustable)

Motor Protection

MCCBs feeding motors are often only required to provide protection from short-circuits. Overload protection is provided by a dedicated thermal or electronic overload relay. Tembreak 2 MCCBs without thermal protection elements are available for this application. Four pole MCCBs with magnetic trip only have protection on the neutral pole as standard.

TEMBREAK 2 ADJUSTABLE THERMAL AND ADJUSTABLE MAGNETIC PROTECTION

Time/Current Characteristic Curves

S125-NJ, S125-GJ, VS125-NJ (20A to 100A)

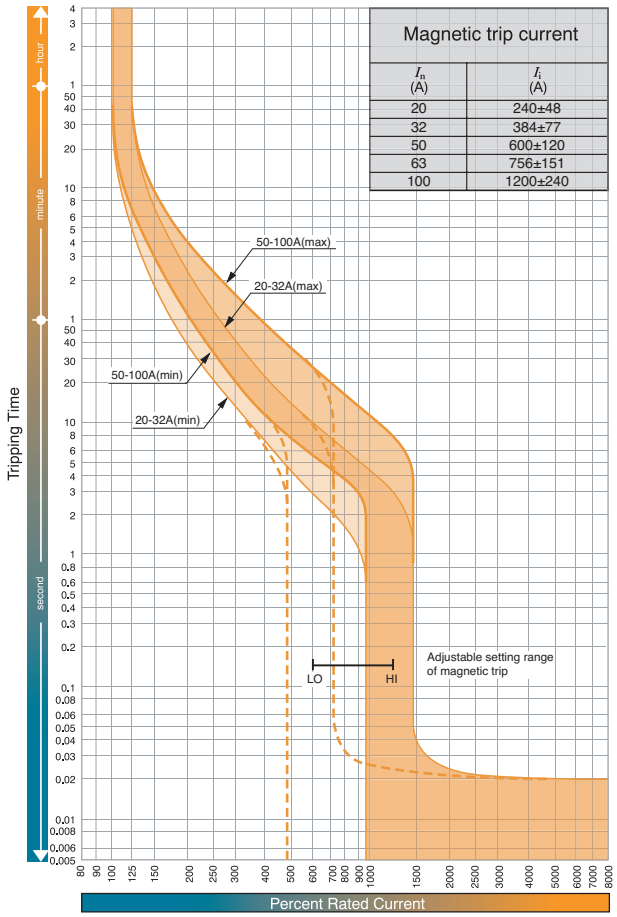

Time/Current Characteristic Curves

S125-NJ, S125-GJ, VS125-NJ (125A)

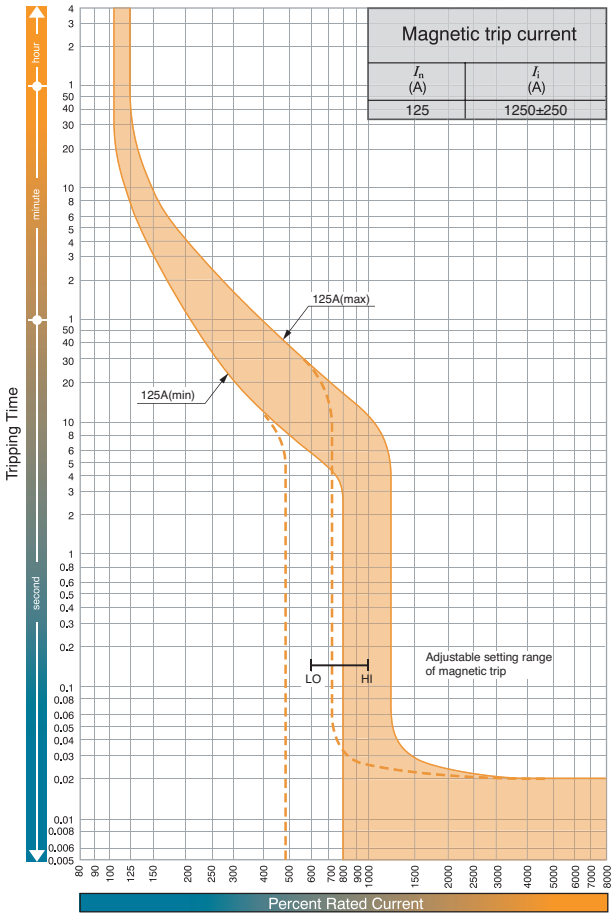

PROTECTION CHARACTERISTICS

TEMBREAK 2 ADJUSTABLE THERMAL AND ADJUSTABLE MAGNETIC PROTECTION

Time/Current Characteristic Curves

H125-NJ, L125-NJ, L125-PJ

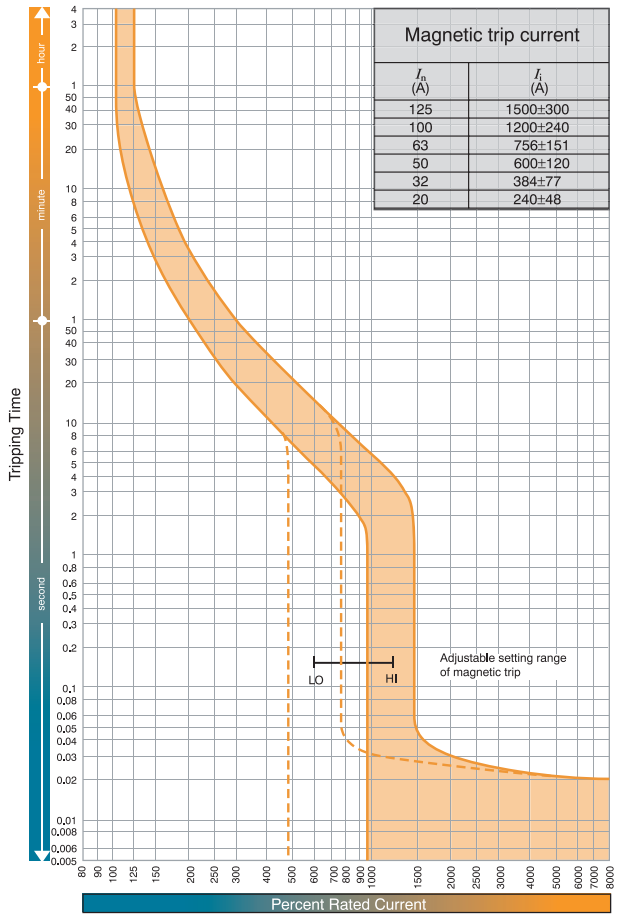

TEMBREAK 2 ADJUSTABLE THERMAL AND ADJUSTABLE MAGNETIC PROTECTION

Time/Current Characteristic Curves

S160-NJ, S160-GJ, S250-NJ, S250-GJ, VS250-NJ (20A to 200A)

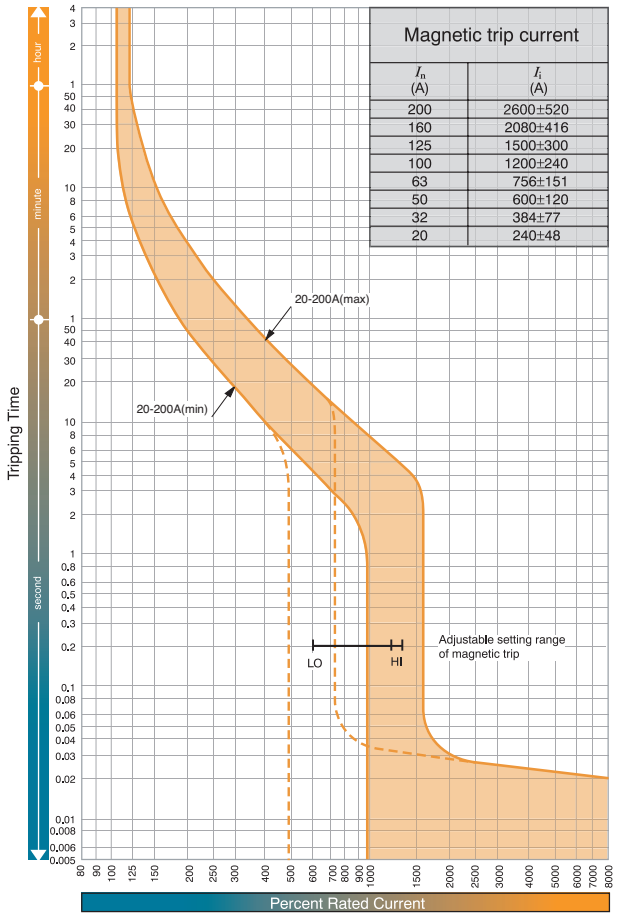

Magnetic trip current	
I_n (A)	I_i (A)
200	2600±520
160	2080±416
125	1500±300
100	1200±240
63	756±151
50	600±120
32	384±77
20	240±48

Time/Current Characteristic Curves

S250-NJ, S250-GJ, VS250-NJ (250A)

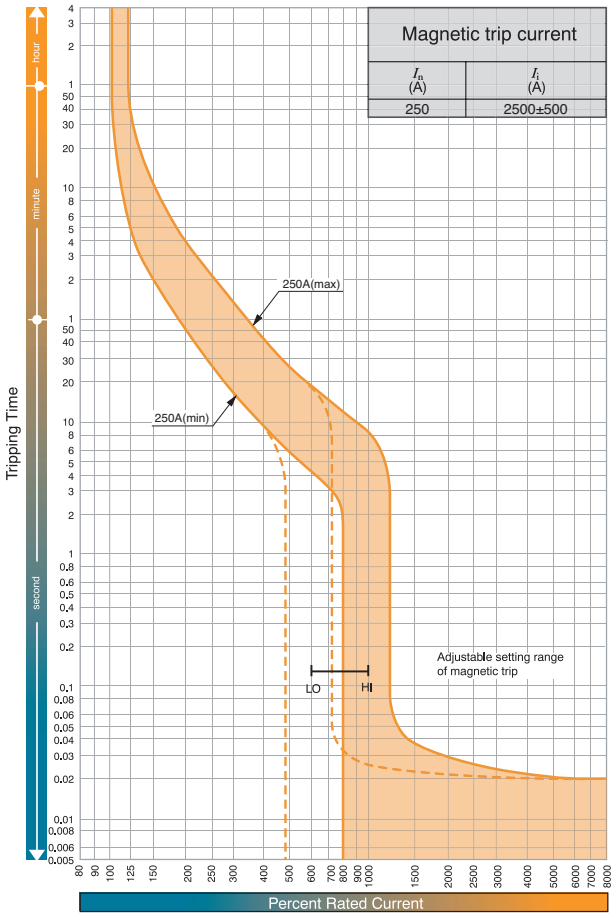

Magnetic trip current	
I_n (A)	I_i (A)
250	2500±500

PROTECTION CHARACTERISTICS

TEMBREAK 2 ADJUSTABLE THERMAL AND ADJUSTABLE MAGNETIC PROTECTION

Time/Current Characteristic Curves

H160-NJ, H250-NJ, L160-NJ,L250-NJ

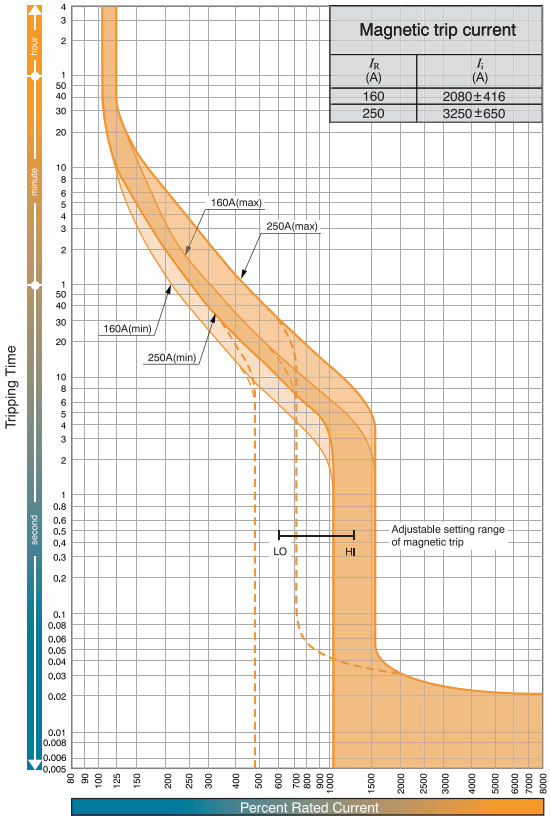

✻ For Plug-in 225A 2925±585A

TEMBREAK 2 ADJUSTABLE THERMAL AND ADJUSTABLE MAGNETIC PROTECTION

Time/Current Characteristic Curves

E400-NJ, S400-CJ, S400-NJ, S400-GJ, S400-PJ

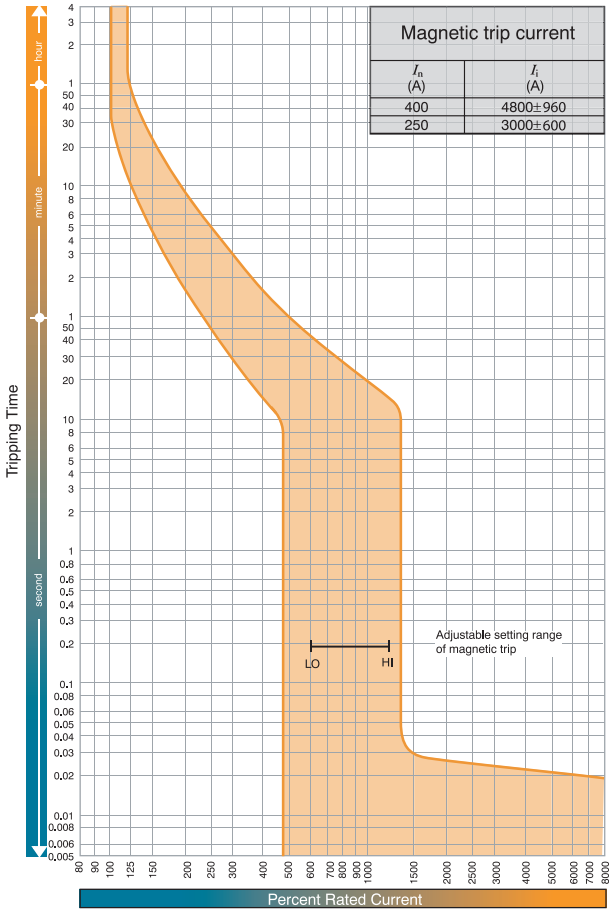

PROTECTION CHARACTERISTICS

TEMBREAK 2 ADJUSTABLE THERMAL AND ADJUSTABLE MAGNETIC PROTECTION

Time/Current Characteristic Curves

S800-CJ, S800-NJ, S800-RJ (630A)

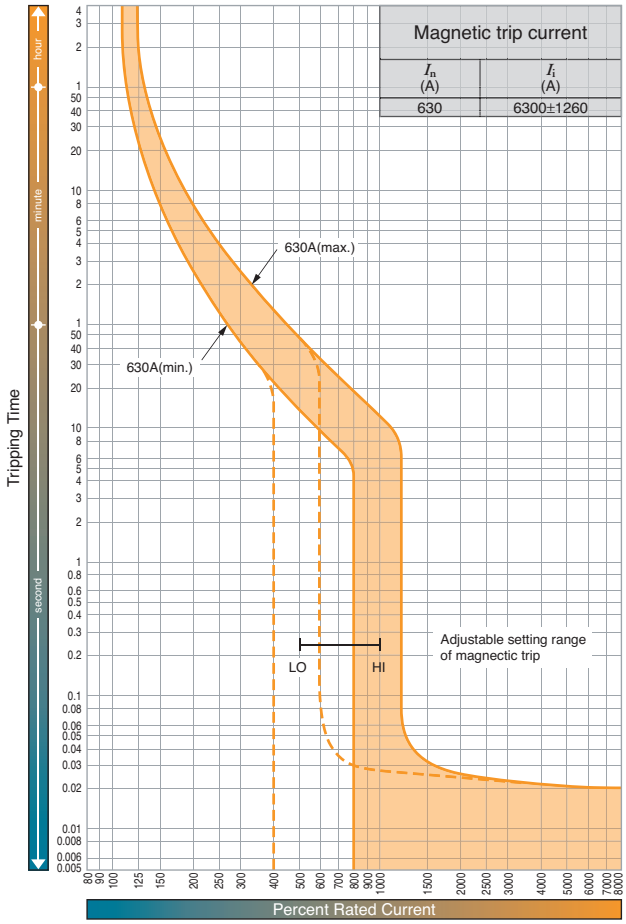

Time/Current Characteristic Curves

S800-CJ, S800-NJ, S800-RJ (800A)

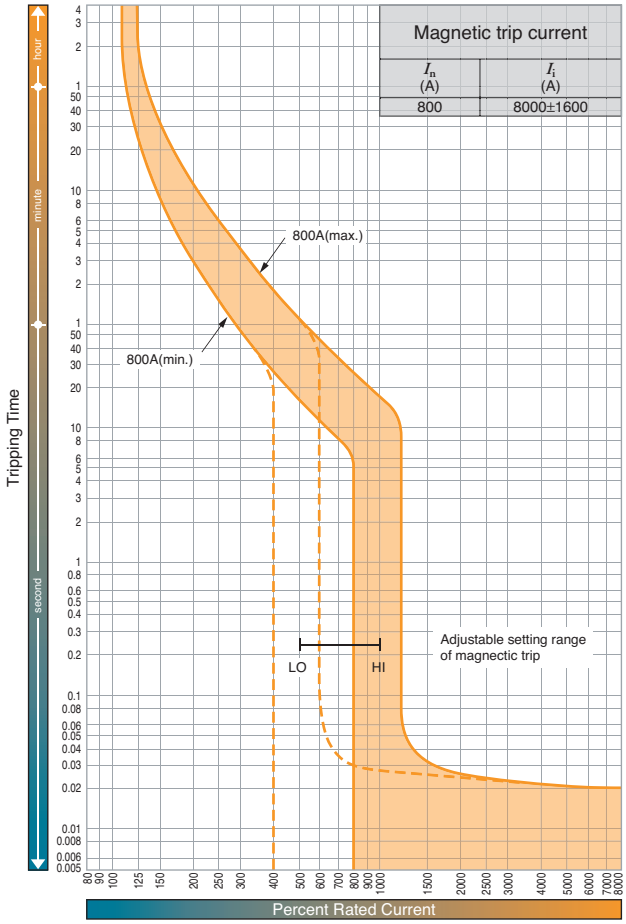

TEMBREAK 2 ADJUSTABLE THERMAL AND ADJUSTABLE MAGNETIC PROTECTION

Let-Through Peak Current Characteristics

S125-NJ, S125-GJ. 380/415/440V AC.

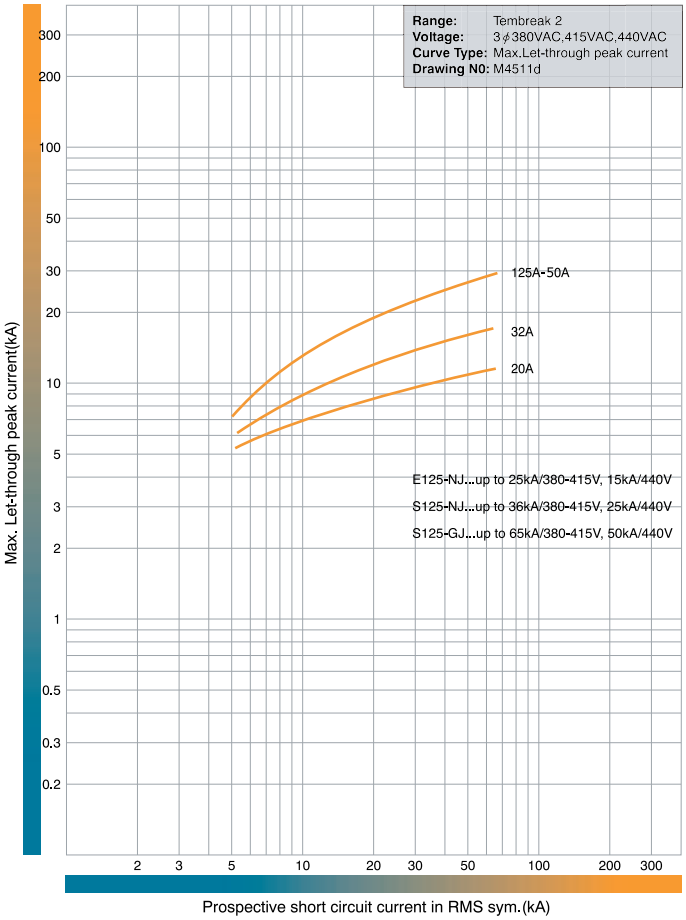

Let-Through Peak Current Characteristics

S125-NJ, S125-GJ. 690V AC.

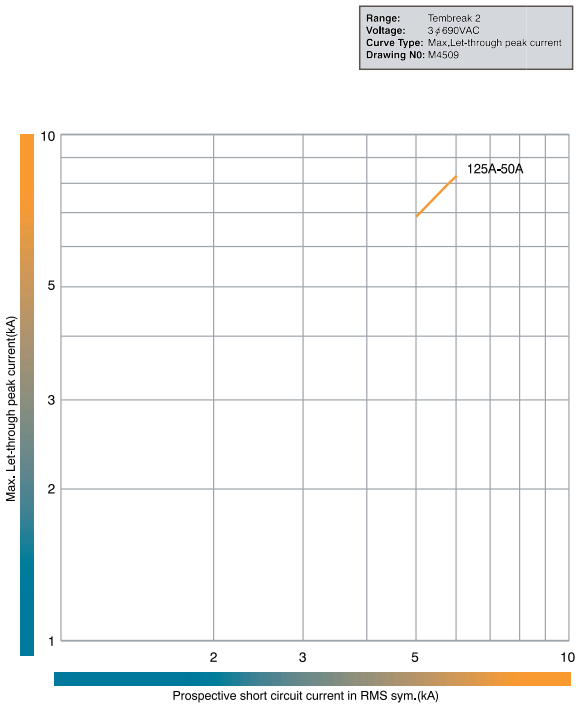

PROTECTION CHARACTERISTICS

TEMBREAK 2 ADJUSTABLE THERMAL AND ADJUSTABLE MAGNETIC PROTECTION

Let-Through Peak Current Characteristics

H125-NJ, L125-NJ. 380/415/440V AC.

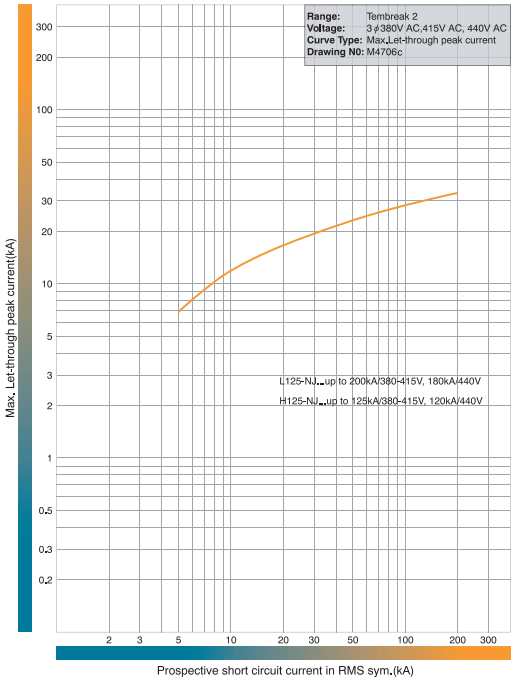

Let-Through Peak Current Characteristics

H125-NJ, L125-NJ. 690V AC.

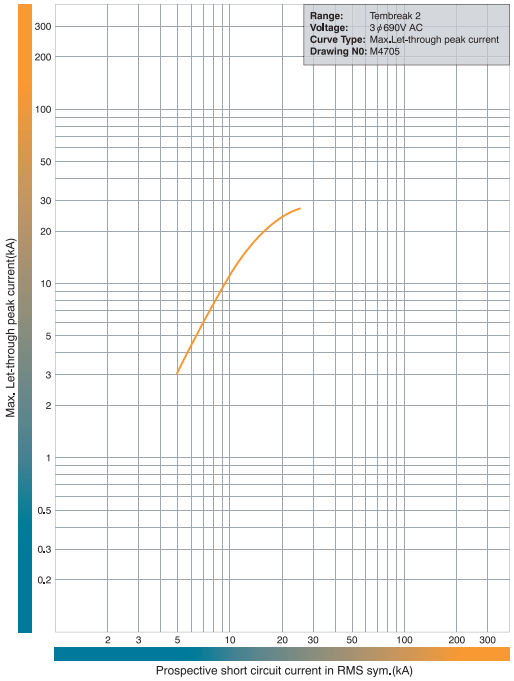

Let-Through Peak Current Characteristics

S160-NJ, S160-GJ, S250-NJ, S250-GJ. 380/415/440V AC.

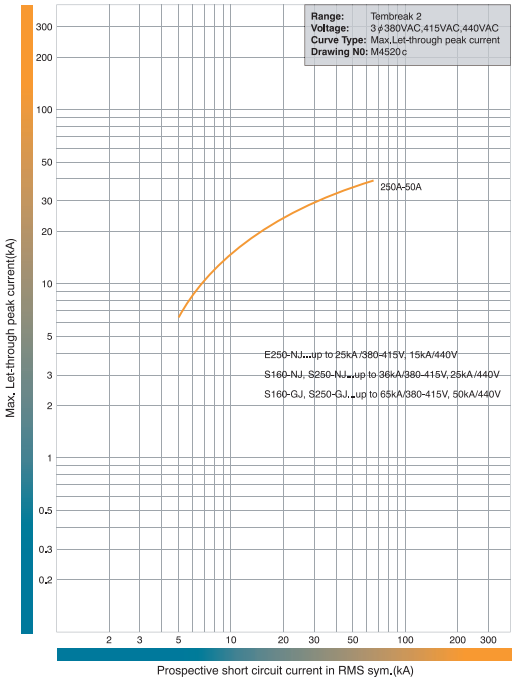

Let-Through Peak Current Characteristics

S160-NJ, S160-GJ, S250-NJ, S250-GJ. 690V AC.

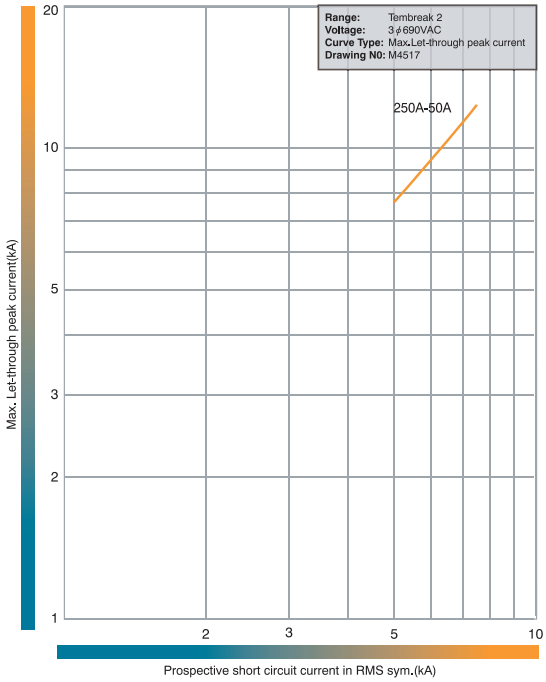

TEMBREAK 2 ADJUSTABLE THERMAL AND ADJUSTABLE MAGNETIC PROTECTION

Let-Through Peak Current Characteristics

H160-NJ, L160-NJ, H250-NJ. 380/415/440V AC.

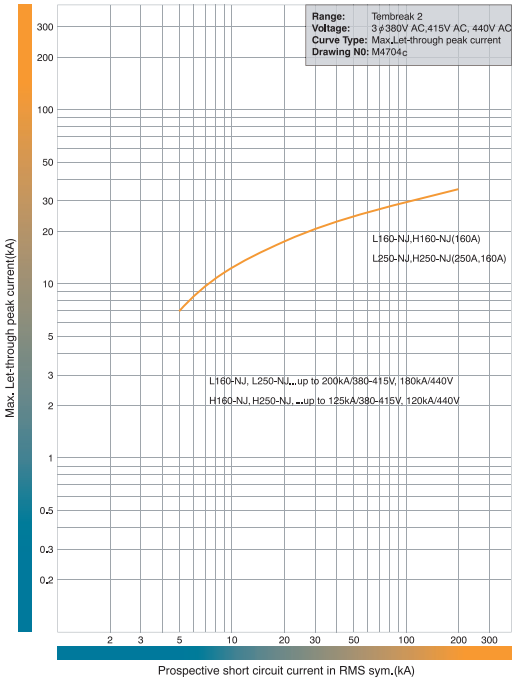

Let-Through Peak Current Characteristics

H160-NJ, L160-NJ, H250-NJ, L250-NJ. 690V AC.

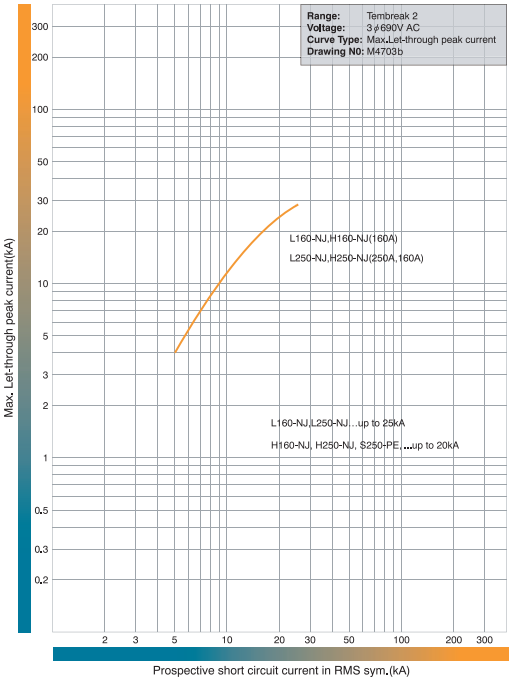

Let-Through Peak Current Characteristics

E400-NJ, S400-CJ, S400-NJ, S400-GJ, S400-PJ. 415V AC.

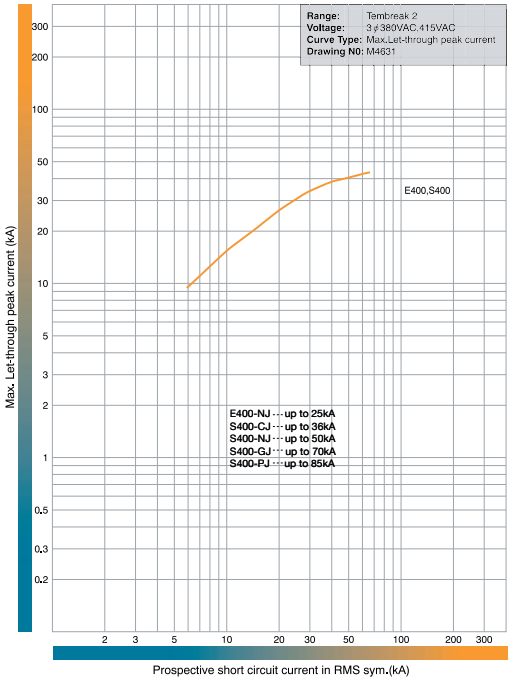

Let-Through Peak Current Characteristics

S400-CJ, S400-NJ, S400-GJ, S400-PJ. 690V AC.

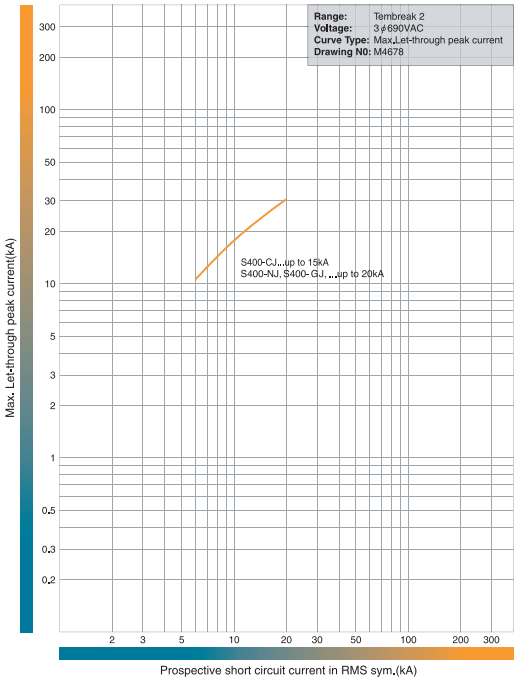

PROTECTION CHARACTERISTICS

TEMBREAK 2 ADJUSTABLE THERMAL AND ADJUSTABLE MAGNETIC PROTECTION

Let-Through Peak Current Characteristics

S800-CJ, S800-NJ, S800-RJ. 415V AC.

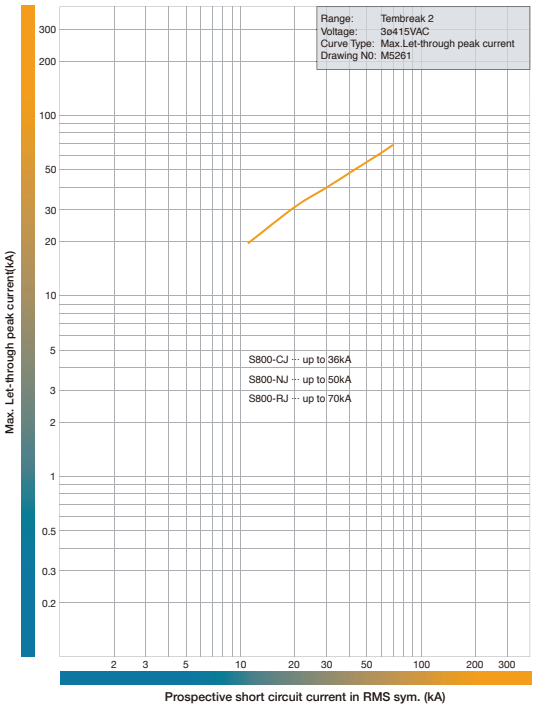

Let-Through Peak Current Characteristics

S800-NJ, S800-RJ. 690V AC.

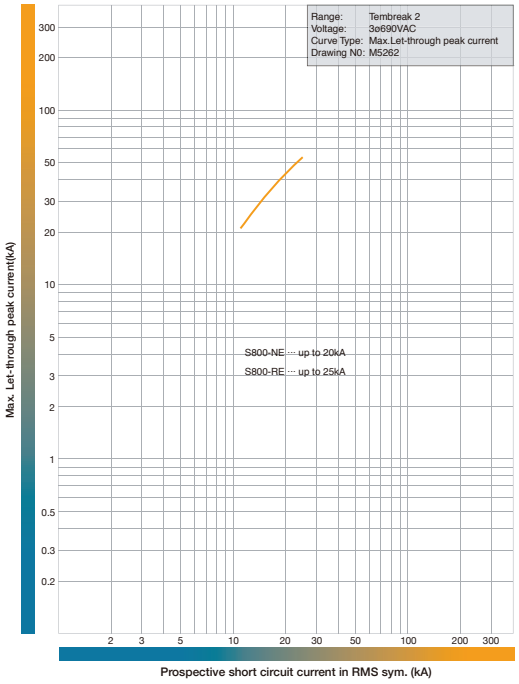

Let-Through Energy Characteristics

S125-NJ, S125-GJ. 440V AC. 380/415/440V AC.

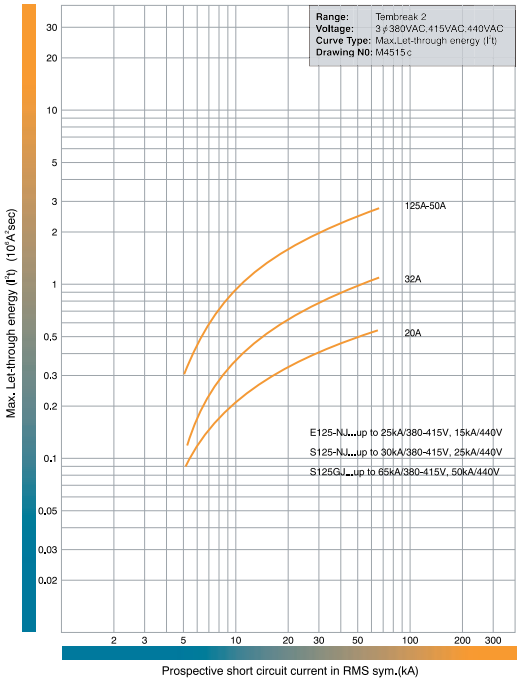

Let-Through Energy Characteristics

S125-NJ, S125-GJ. 690V AC.

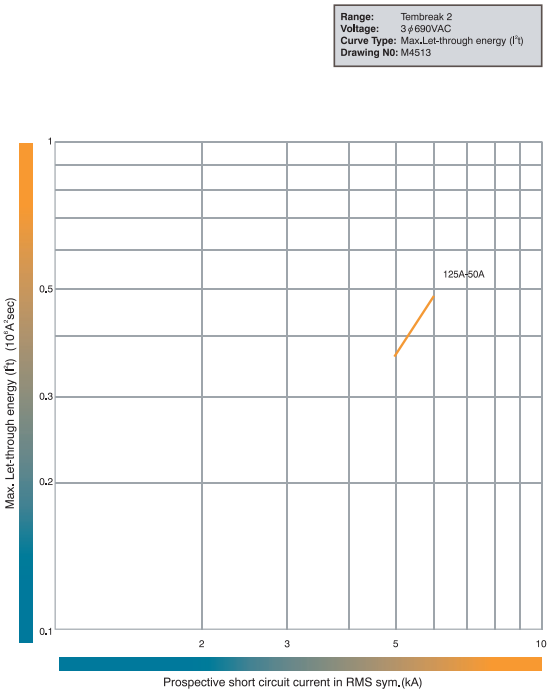

TEMBREAK 2 ADJUSTABLE THERMAL AND ADJUSTABLE MAGNETIC PROTECTION

Let-Through Energy Characteristics

H125-NJ, L125-NJ. 380/415/440V AC.

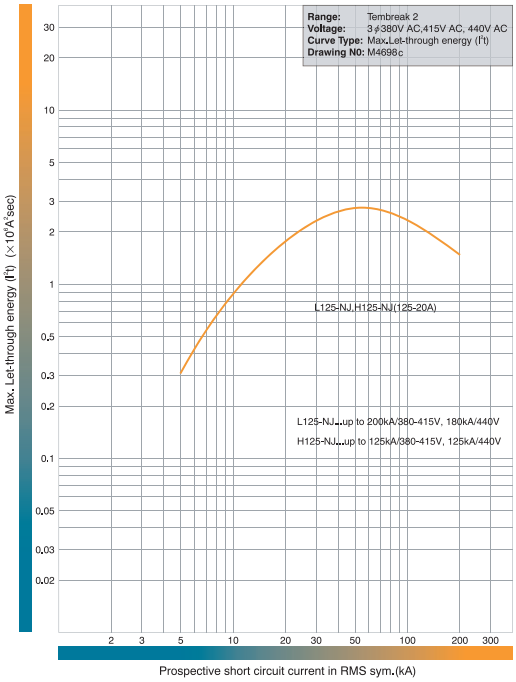

Let-Through Energy Characteristics

H125-NJ, L125-NJ. 690V AC.

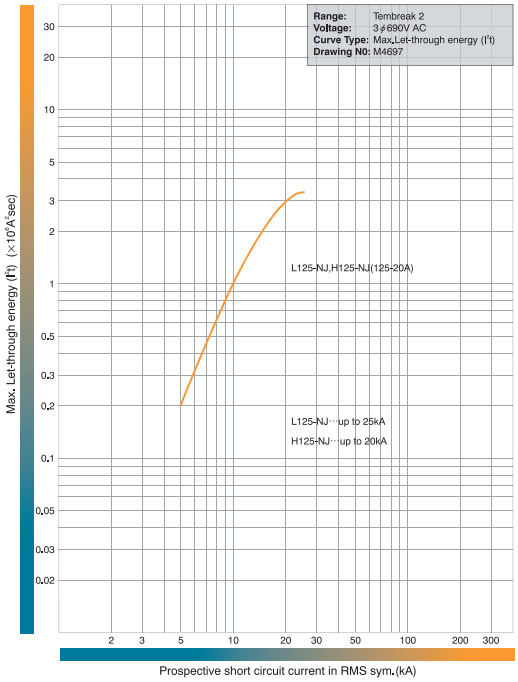

Let-Through Energy Characteristics

S160-NJ, S160-GJ, S250-NJ, S250-GJ. 380/415/440V AC.

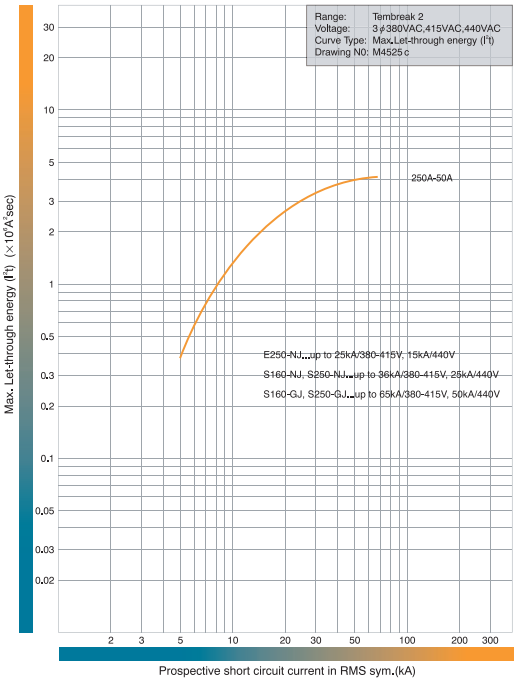

Let-Through Energy Characteristics

S160-NJ, S160-GJ, S250-NJ, S250-GJ. 690V AC.

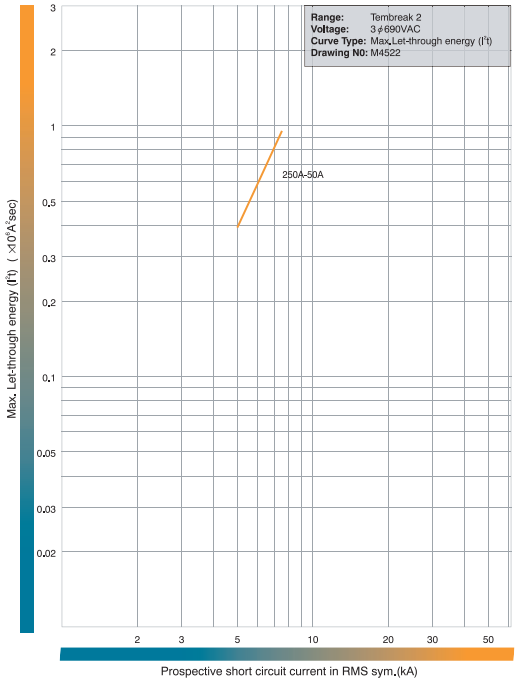

PROTECTION CHARACTERISTICS

TEMBREAK 2 ADJUSTABLE THERMAL AND ADJUSTABLE MAGNETIC PROTECTION

Let-Through Energy Characteristics

HI60-NJ, L160-NJ, H250-NJ, L250-NJ. 380/415/440V AC.

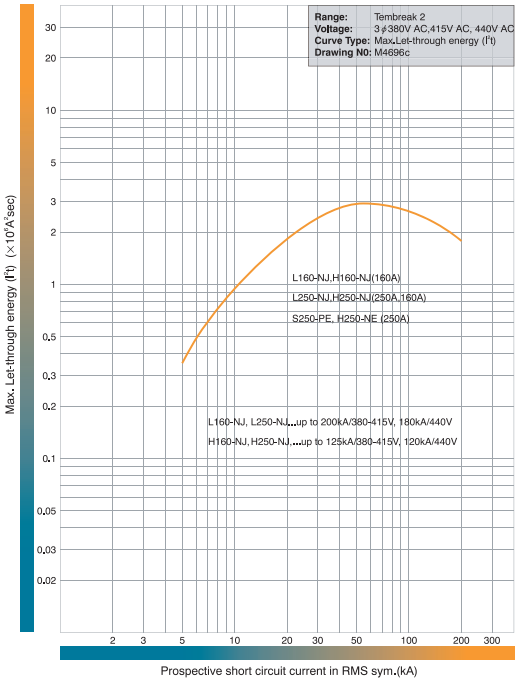

Let-Through Energy Characteristics

HI60-NJ, L160-NJ, H250-NJ, L250-NJ. 690V AC.

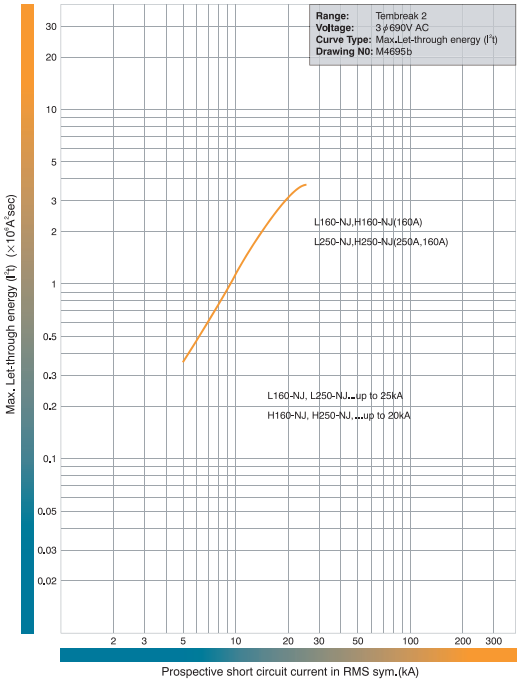

TEMBREAK 2 ADJUSTABLE THERMAL AND ADJUSTABLE MAGNETIC PROTECTION

Let-Through Energy Characteristics

E400-NJ, S400-CJ, S400-NJ, S400-GJ, S400-PJ. 380/415/440V AC.

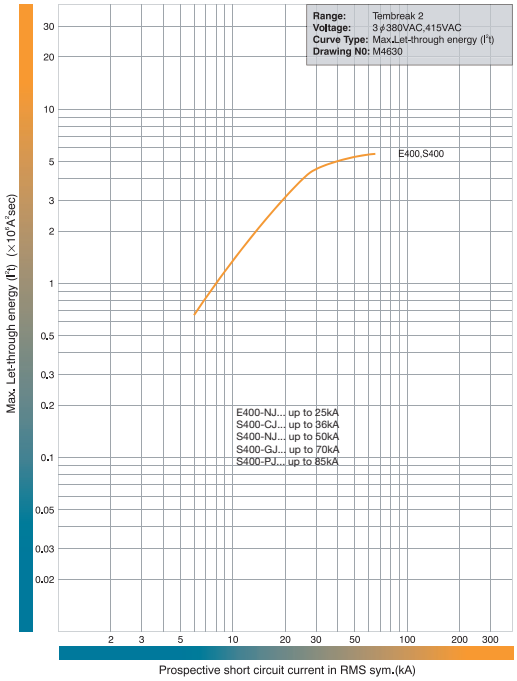

Let-Through Energy Characteristics

S400-CJ, S400-NJ, S400-GJ, S400-PJ. 690V AC.

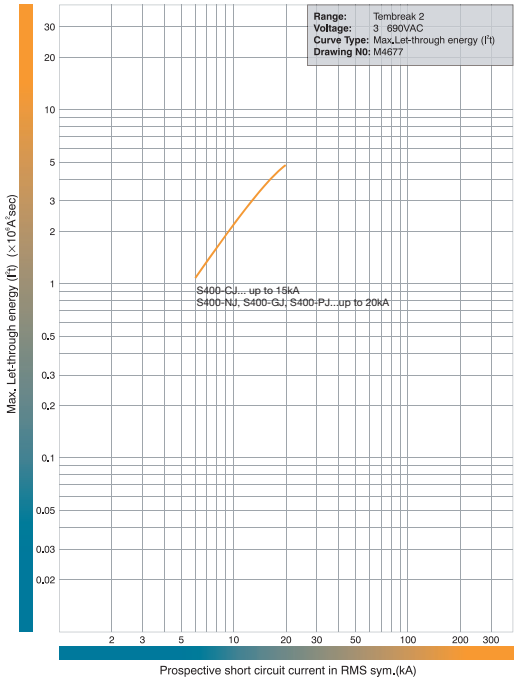

PROTECTION CHARACTERISTICS

TEMBREAK 2 ADJUSTABLE THERMAL AND ADJUSTABLE MAGNETIC PROTECTION

Let-Through Energy Characteristics

S800-CJ, S800-NJ, S800-RJ. 415V AC.

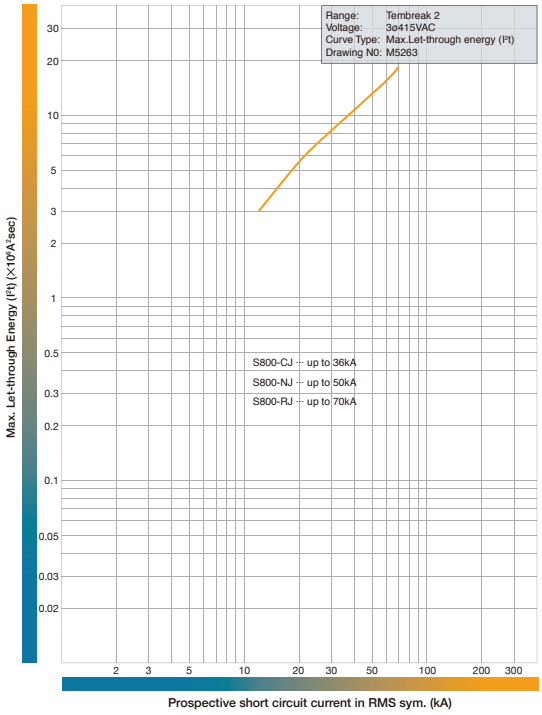

Let-Through Energy Characteristics

S800-NJ, S800-RJ. 690V AC.

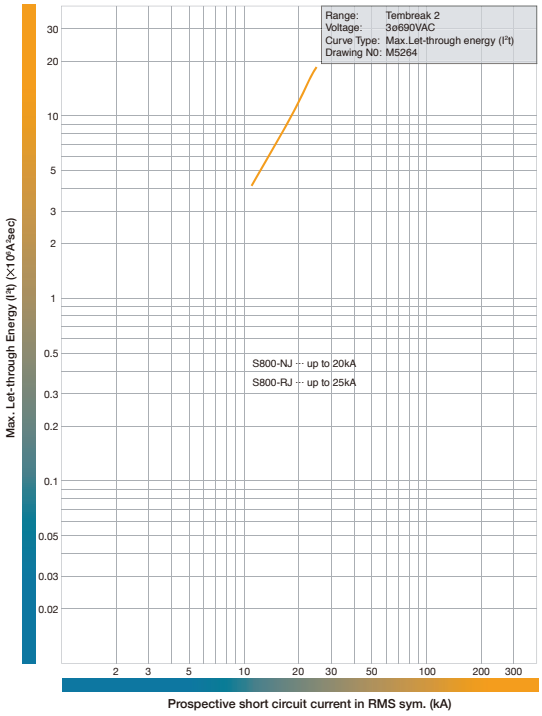

ELECTRONIC PROTECTION

TemBreak 2 MCCBs from 250A frame to 1600A frame are available with electronic protection units. Current ratings, I_n, of 40A, 125A, 160A, 250A, 400A, 630A, 800A, 1000A, 1250A and 1600A are available. These offer great flexibility as their characteristics can be set to suit a wide range of application conditions. Overload protection can be set between 0.4 and 1.0 times I_n.

Terasaki offer one of the most adaptable protection units on the market:

If you require a characteristic which is not available as a preset on our standard electronic protection unit, send us the details and we will program a customised characteristic to your specification.*

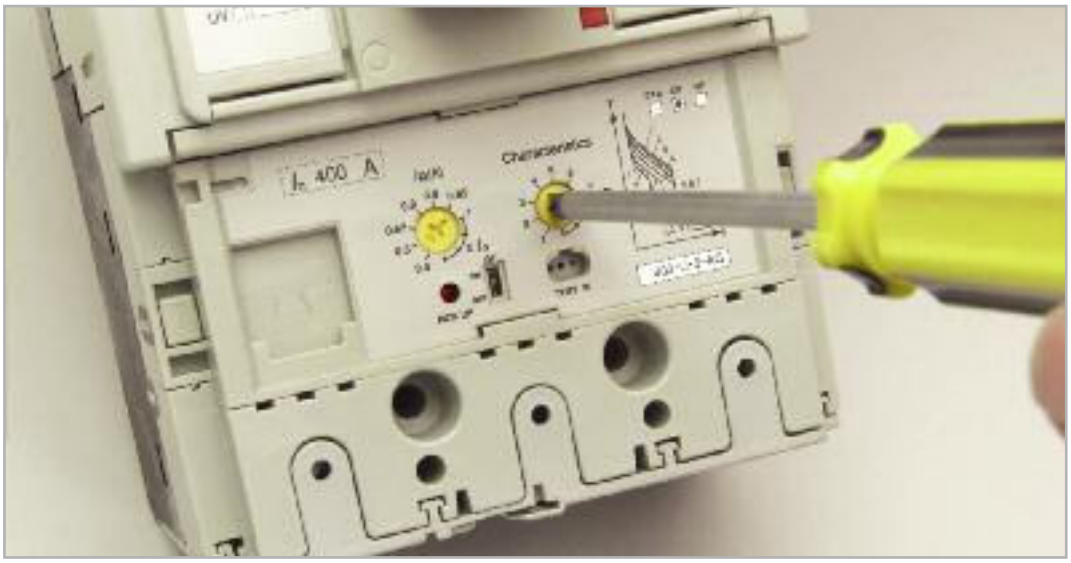

Selecting a Preset Characteristic for a 400A TemBreak 2 MCCB with Electronic Protection

Every TemBreak 2 electronic protection unit includes overload protection (L), delayed short-circuit protection (S) and instantaneous protection (I) as standard.

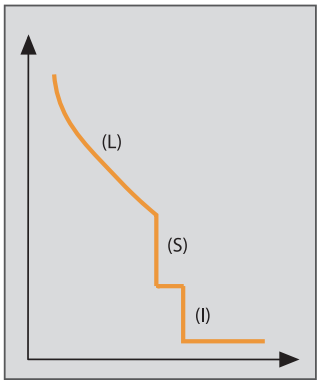

Electronic Protection Characteristic

*Characteristic is programmable within certain limits.
Contact us for details.

PROTECTION CHARACTERISTICS

ELECTRONIC PROTECTION

Optional Functions

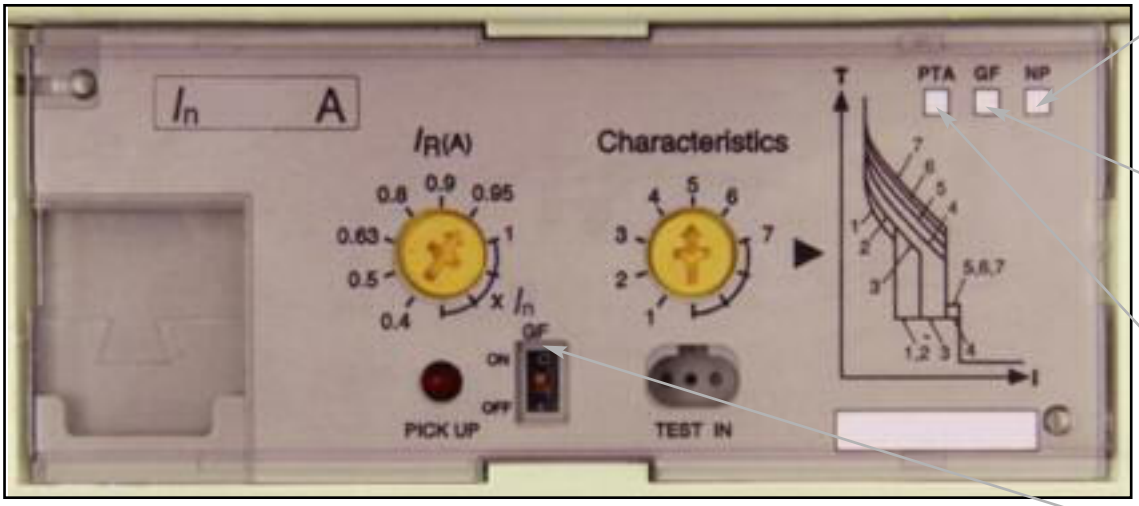

Neutral protection (N) is present if this box is filled

Ground fault trip (G) is present if this box is filled

Preferential trip (P) alarm is present if this box is filled

DIP switch to enable/ground fault trip

Three optional functions are available:

Ground Fault Trip (G)

This function trips the MCCB after time delay, t_g, if the ground fault current exceeds the preset threshold, I_g. Ground fault protection can be enabled and disabled by operating a DIP switch on the electronic protection unit. An external current transformer is available if the ground fault trip function is required on a 3 pole MCCB, in a 3 phase, 4 wire system.
The ground fault trip function is available from 400A to 1600A.

Neutral Protection (N)

Neutral protection trips the MCCB after time delay, t_N, if current in the neutral conductor exceeds the rated current, I_n, of the MCCB. The time delay characteristic is identical to that of the overload characteristic (L).

Preferential Trip Alarm (P)

An LED and volt-free output contact are activated after a time delay, t_p, if the load current exceeds the preset threshold, I_p.

An OCR power supply is required for operation of the preferential trip alarm. This is mounted as shown below, either on the side of the breaker (250A to 1600A – standard), or remotely (400 to 1600A only – on request). Ratings, specifications and wiring arrangements are shown below. Dimensions of the OCR power supply for preferential trip alarm can be found in Section 7. Note that the breaker mounted terminal block is not compatible with the OCR power supply for Front-Connected and Rear-Connected MCCBs described in Section 5, if the OCR power supply is mounted on the right side of the breaker.

OCR Power Supply Specifications	
Voltage	200-240V AC
Rated Power	2VA

Rated Current of Output Contact		
	resistive load	inductive load
250V AC	2A	2A
220V DC	2A	2A

ELECTRONIC PROTECTION

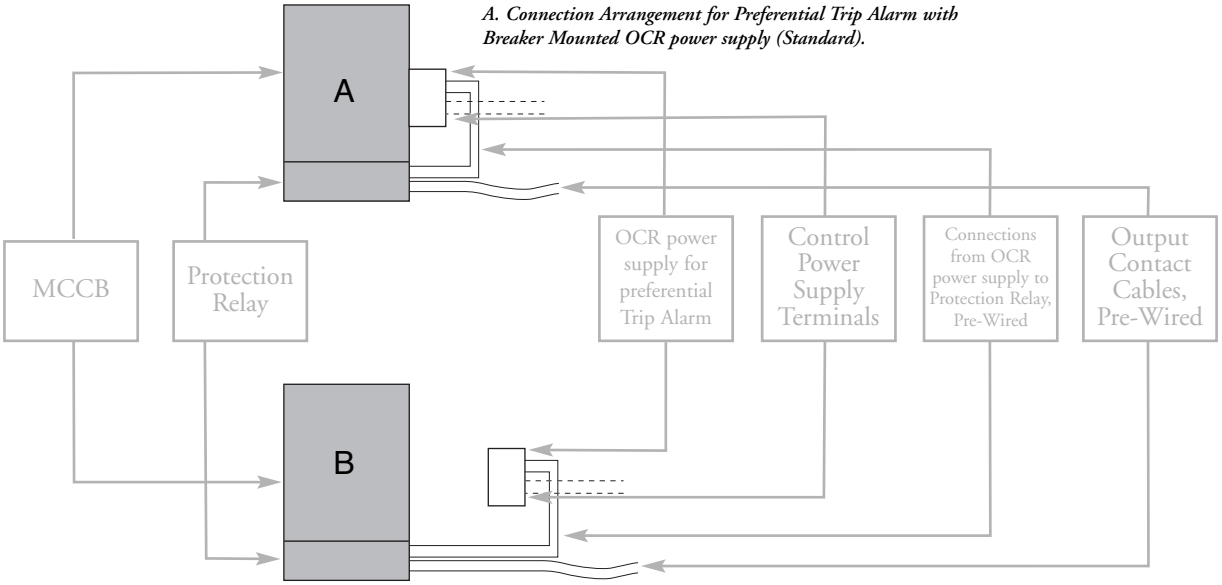

A. Connection Arrangement for Preferential Trip Alarm with Breaker Mounted OCR power supply (Standard).

B. Connection Arrangement for Preferential Trip Alarm with Remotely Mounted OCR power supply (On Request).

How to Specify Optional Functions

Optional functions must be specified at the time of order. Descriptions for electronic MCCBs include a 1-4 digit alphabetic code after the type designation which details the combination of optional functions. For example:

S400-GE **APG** 3P 400A FC - includes preferential trip and ground fault trip.

The table below lists codes for all the optional functions currently available:

Optional Function					
I_n	Poles	Code	Ground Fault (G)	Neutral Protection (N)	Preferential Trip Alarm (P)
250	3	AP	-	-	■
	4	AP	-	-	■
		AN	-	■	-
		APN	-	■	■
400	3	AP	-	-	■
630		AG	■	-	-
800		APG	■	-	■
1000	4	AP	-	-	■
1250		AN	-	■	-
1600		APN	-	■	■
		AGN	■	■	-
		APGN	■	■	■

■ Available - Not Available

PROTECTION CHARACTERISTICS

ELECTRONIC PROTECTION

Adjustment Dials

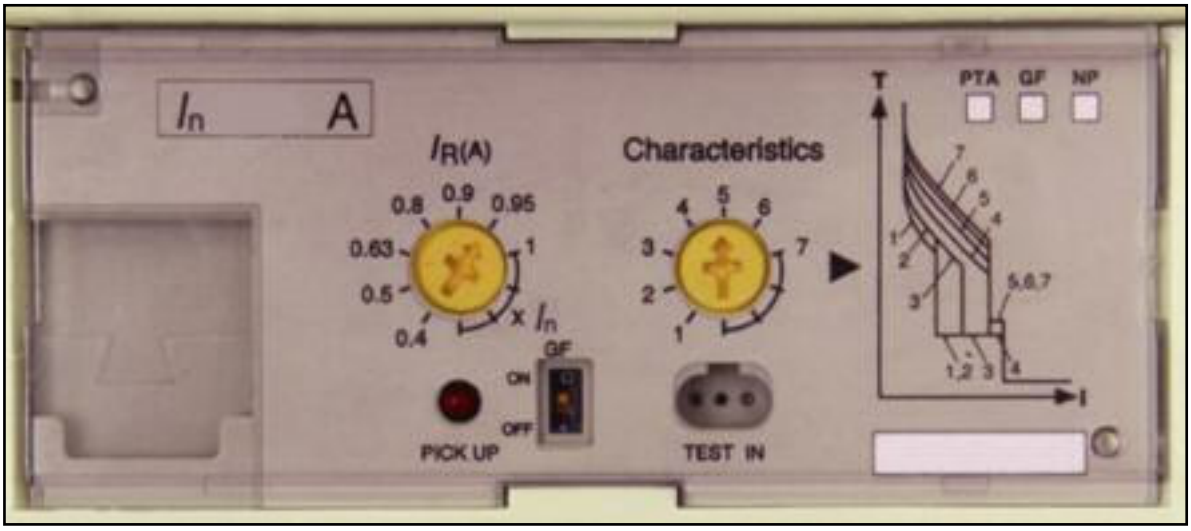

The left adjustment dial sets the rated current to match the conductor rating. The right adjustment dial selects one of seven preset characteristics on 400A, 800A, 1250A and 1600A models, and one of six preset characteristics on 630A and 1000A models, and one of 5 preset characteristics on 250A model. The effects of the left adjustment dial (labelled I_R(A)), and the right adjustment dial (labelled Characteristics) are detailed in the tables shown underneath each time / current graph.

Tolerances of Characteristics

Characteristics		Tolerance
Long Time Delay	I_R	Tripping when (I_R×1.05) < load current ≦ (I_R×1.25)
	t_R	± 20%
Short Time Delay	I_{sd}	± 15%
	t_{sd}	Total clearing time +50ms, resettable time −20ms
Instantaneous	I_i	± 20%
Preferential Trip Alarm	I_p	± 10%
	t_p	± 10%
Ground Fault Trip	I_g	± 15%
	t_g	Total clearing time +50ms, resettable time −20ms
Neutral Protection	I_N	Tripping when (I_N×1.05) < load current ≦ (I_N×1.3)

ELECTRONIC PROTECTION

Time/Current Characteristic Curves

S250-NE, S250-GE, S250-PE, H250-NE

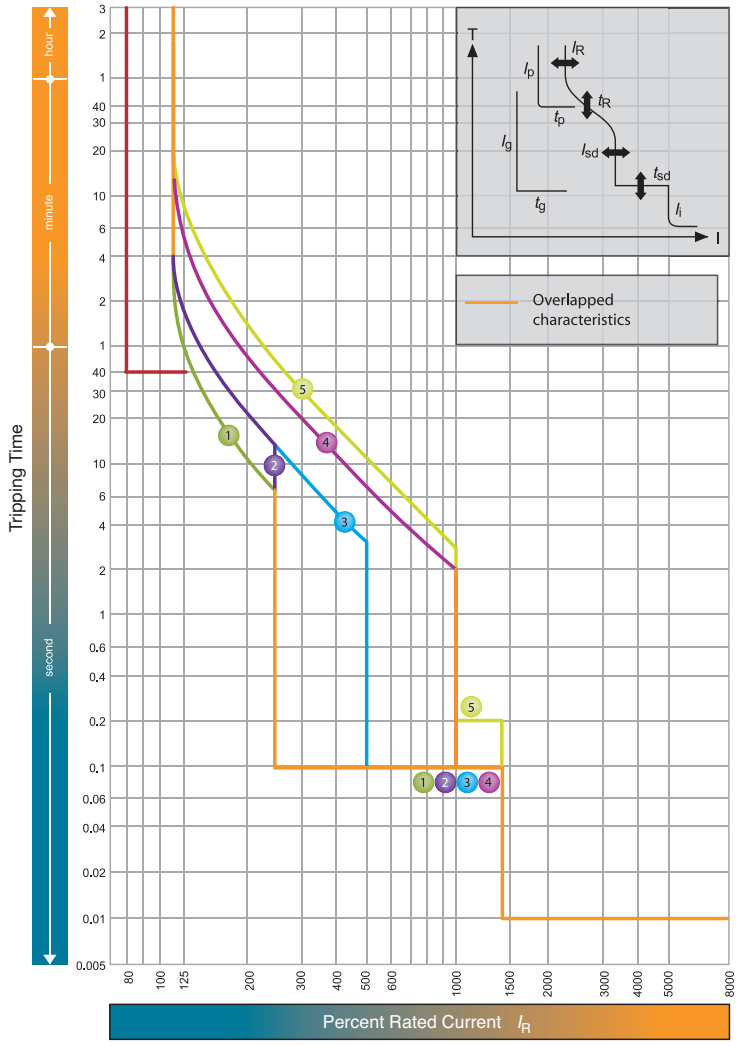

I_n = 250A; 160A; 125A; 40A Note(1)

I_R (A)									
LTD Pick-up current	I_R	x/n	0.4	0.5	0.63	0.8	0.9	0.95	1.0

	Characteristics		No.	1	2	3	4	5
Standard	LT	t_R	(s)	11	21	21	5	7.5
				at 200% x I_R			at 600% x I_R	
	ST	I_{sd}	x/I_R	2.5		5	10	
		t_{sd}	(s)	0.1				0.2
	INST	I_i	x/I_R	14(Max: 13 x I_n) Note (2)				
Option	PTA	I_p	x/I_R	0.8				
		t_p	(s)	40				
	NP	I_N	x/I_R	1.0 Note (3)				
		t_N	(s)	$t_N = t_R$				

Note
(1) For Plug-in (PM), max. setting for I_R should be less than 225A. When I_n=250A, I_R should be I_nX0.9 or less.
(2) I_i max. = 13 x I_n. (3) Characteristic of neutral protection (t_N vs. I_N) is identical to characteristic of phase protection (t_R vs. I_R).

PROTECTION CHARACTERISTICS

ELECTRONIC PROTECTION

Time/Current Characteristic Curves

S400-NE, S400-GE, S400-PE, H400-NE, L400-NE, L400-PE

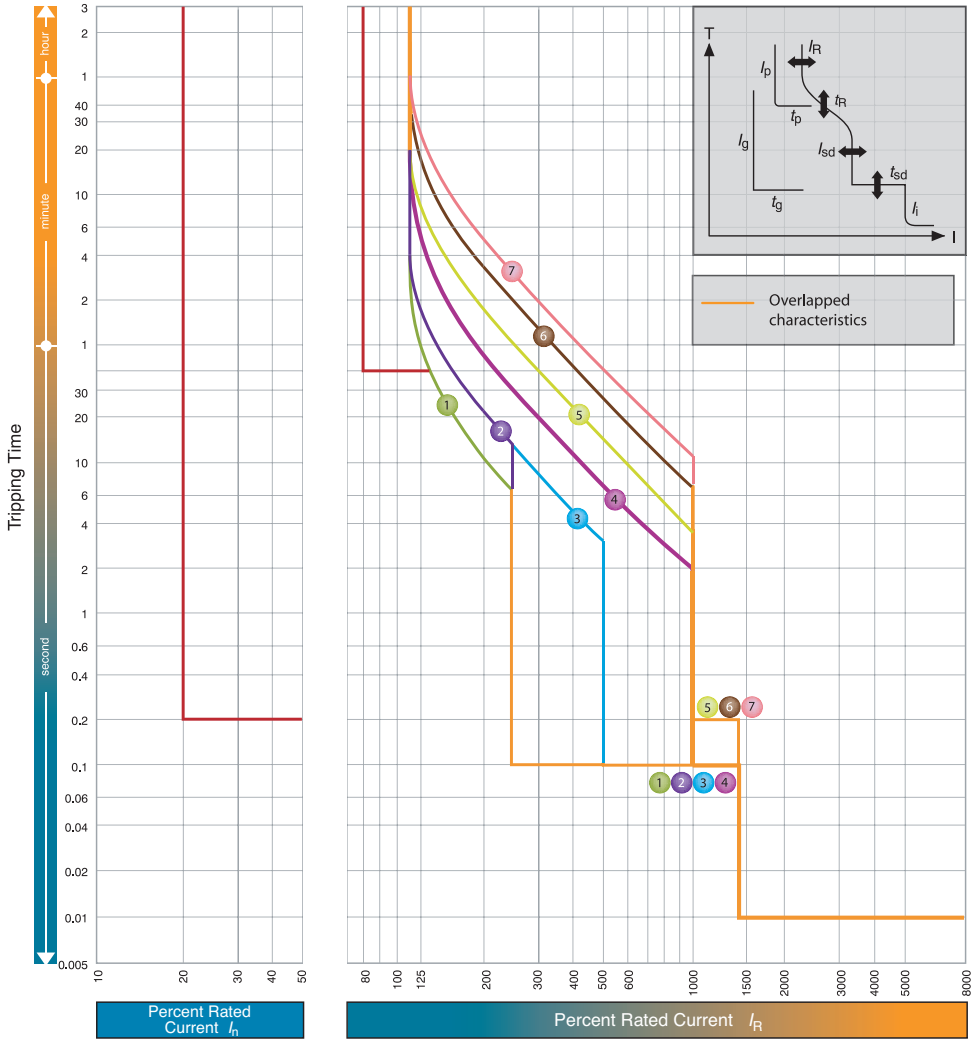

I_n = 400A; 250A Note (1)

I_R (A)										
LTD Pick-up current	I_R	x/n	0.4	0.5	0.63	0.8	0.9	0.95	1.0

	Characteristics		No.	1	2	3	4	5	6	7
Standard	LT	t_R	(s)	11	21	21	5	10	19	29
				at 200% x I_R			at 600% x I_R			
	ST	I_{sd}	xI_R	2.5		5	10			
		t_{sd}	(s)	0.1				0.2		
	INST	I_i	xI_R	14(Max: 13 x I_n) Note (2)						
Option	PTA	I_p	xI_R	0.8						
		t_p	(s)	40						
	GF Note(4)	I_g	xI_n	0.2						
		t_g	(s)	0.2						
	NP	I_N	xI_R	1.0/0.5 Note (3)						
		t_N	(s)	t_N=t_R						

Note

(1) GF is not available when In is 250A. (2) I_i max. = 13 x I_n. (3) 1.0 x I_R or 0.5 x I_R can be selected. Characteristic of neutral protection (t_N vs. I_N) is identical to characteristic of phase protection (t_R vs. I_R). (4) When you specify GF on MCCBs with 3 poles the terminal block is automatically fitted to connect with the external neutral CT for 3 phases 4 wires system. See terminal blocks in section 4.

ELECTRONIC PROTECTION

Time/Current Characteristic Curves

E630-NE, S630-CE, S630-GE

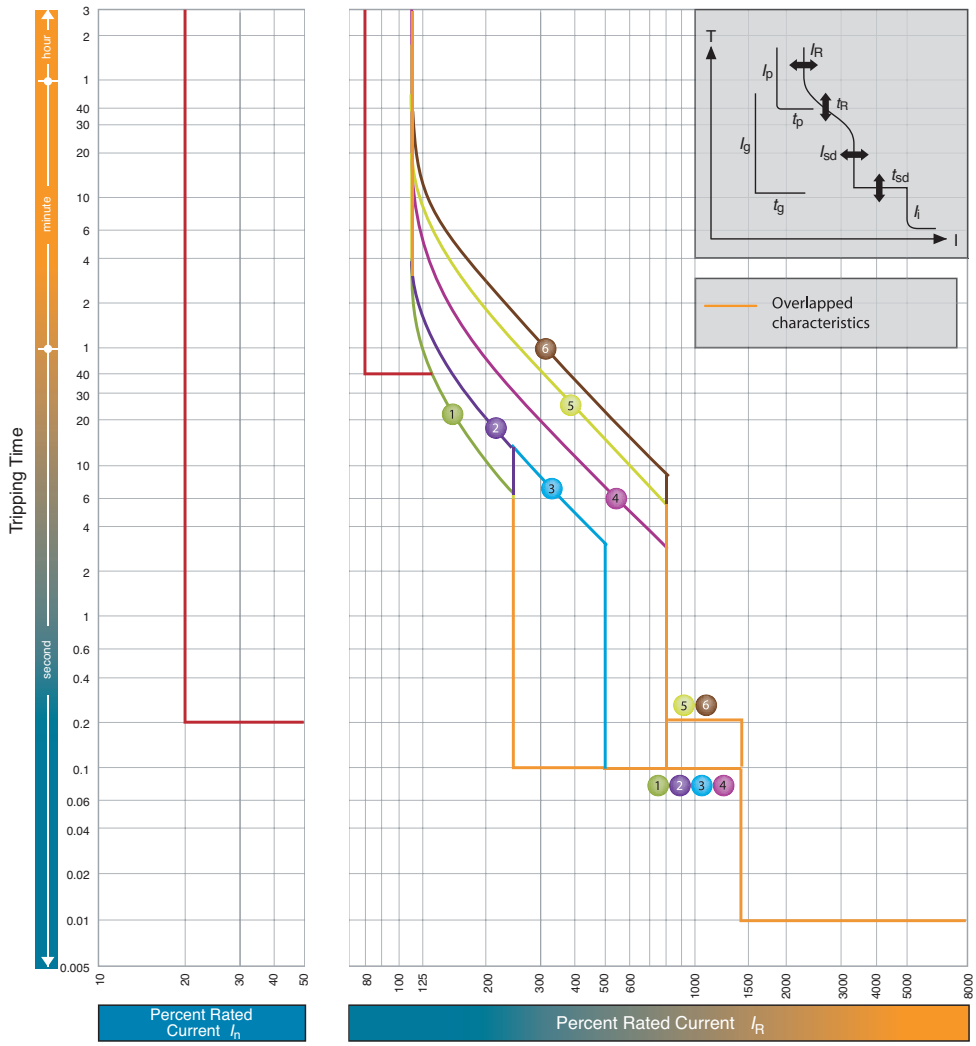

I_n = 630A

			I_R (A)								
			LTD Pick-up current	I_R	xI_n	0.4	0.5	0.63	0.8	0.85	0.9	0.95	1.0

	Characteristics		No.	1	2	3	4	5	6
Standard	LT	t_R	(s)	11	21	21	5	10	16
				at 200% x I_R			at 600% x I_R		
	ST	I_{sd}	xI_R	2.5		5	8		
		t_{sd}	(s)	0.1				0.2	
	INST	I_i	xI_R	14(Max: 10 x I_n) Note (1)					
Option	PTA	I_p	xI_R	0.8					
		t_p	(s)	40					
	GF Note(3)	I_g	xI_n	0.2					
		t_g	(s)	0.2					
	NP	I_N	xI_R	1.0/0.5 Note(2)					
		t_N	(s)	t_N=t_R					

Note

(1) I_i max. = 10 x I_n. (2) 1.0 x I_R or 0.5 x I_R can be selected. Characteristic of neutral protection (t_N vs. I_N) is identical to characteristic of phase protection (t_R vs. I_R). (3) When you specify GF on MCCBs with 3 poles the terminal block is automatically fitted to connect with the external neutral CT for 3 phases 4 wires system. See terminal blocks in section 4.

PROTECTION CHARACTERISTICS

ELECTRONIC PROTECTION

Time/Current Characteristic Curves

S800-NE, S800-RE, H800-NE, L800-NE, L800-PE

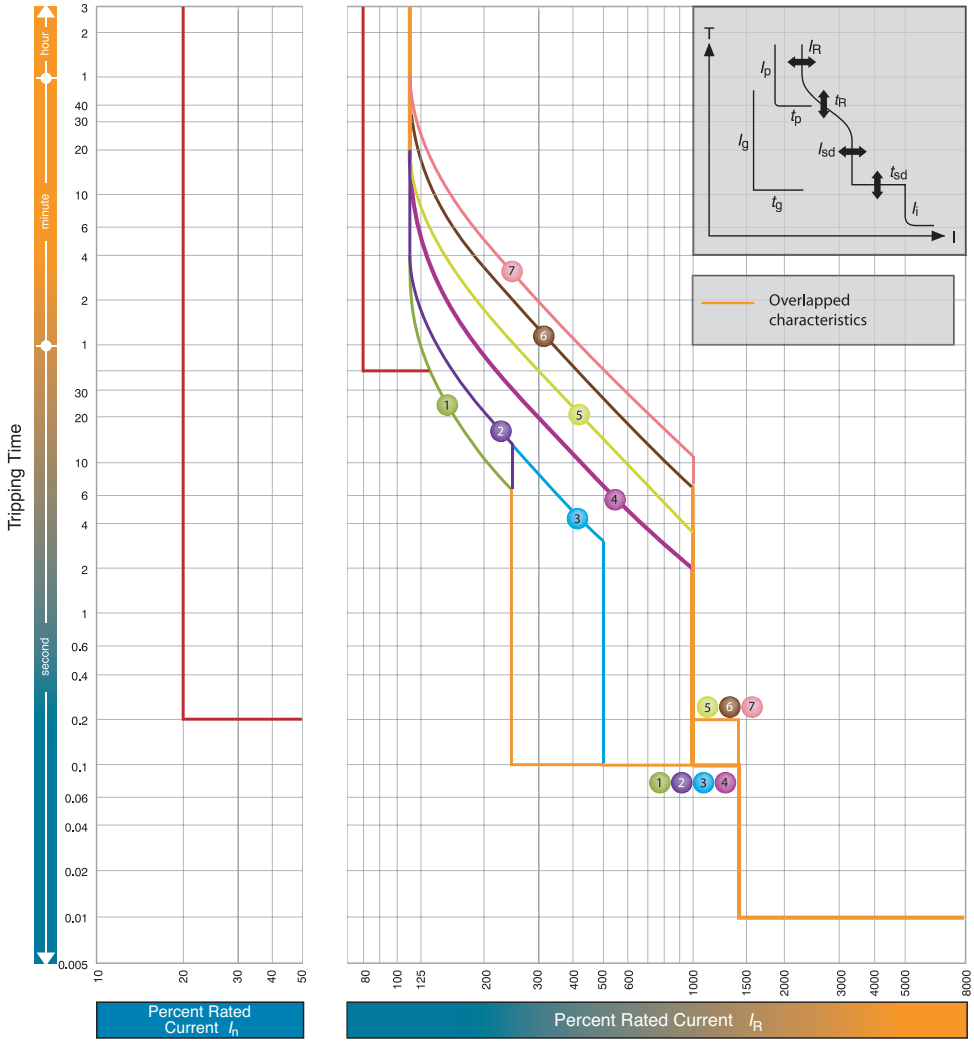

I_n = 800A; 630A

	I_R (A)										
	LTD Pick-up current	I_R	x/n	0.4	0.5	0.63	0.8	0.9	0.95	1.0	
	Characteristics		No.	1	2	3	4	5	6	7	
Standard	LT	t_R	(s)	11	21	21	5	10	19	29	
				at 200% x I_R			at 600% x I_R				
	ST	I_{sd}	xI_R	2.5		5	10				
		t_{sd}	(s)	0.1				0.2			
	INST	I_i	xI_R	14(Max: 12 x I_n) Note (1)							
Option	PTA	I_p	xI_R	0.8							
		t_p	(s)	40							
	GF Note(3)	I_g	xI_n	0.2							
		t_g	(s)	0.2							
	NP	I_N	xI_R	1.0/0.5 Note(2)							
		t_N	(s)	t_N=t_R							

Note

(1) I_i max. = 12 x I_n. (2) 1.0 x I_R or 0.5 x I_R can be selected. Characteristic of neutral protection (t_N vs. I_N) is identical to characteristic of phase protection (t_R vs. I_R). (3) When you specify GF on MCCBs with 3 poles the terminal block is automatically fitted to connect with the external neutral CT for 3 phases 4 wires system. See terminal blocks in section 4.

ELECTRONIC PROTECTION

Time/Current Characteristic Curves

S1000-SE, S1000-NE

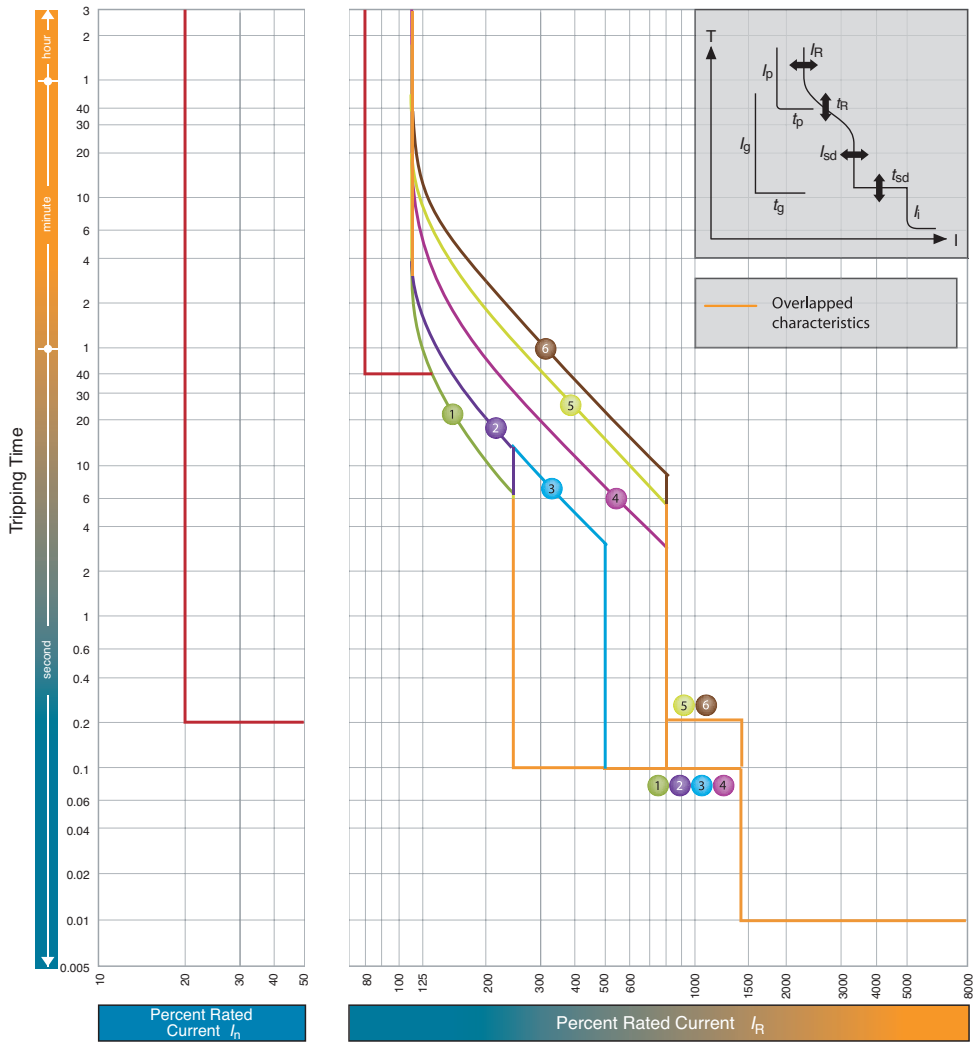

I_n = 1000A

	I_R (A)									
	LTD Pick-up current	I_R	xI_n	0.4	0.5	0.63	0.8	0.9	0.95	1.0

	Characteristics		No.	1	2	3	4	5	6
Standard	LT	t_R	(s)	11	21	21	5	10	16
				at 200% x I_R			at 600% x I_R		
	ST	I_{sd}	xI_R	2.5		5	8		
		t_{sd}	(s)	0.1				0.2	
	INST	I_i	xI_R	14(Max: 10 x I_n) Note (1)					
Option	PTA	I_p	xI_R	0.8					
		t_p	(s)	40					
	GF Note(3)	I_g	xI_n	0.2					
		t_g	(s)	0.2					
	NP	I_N	xI_R	1.0/0.5 Note(2)					
		t_N	(s)	t_N=t_R					

Note

(1) I_i max. = 10 x I_n. (2) 1.0 x I_R or 0.5 x I_R can be selected. Characteristic of neutral protection (t_N vs. I_N) is identical to characteristic of phase protection (t_R vs. I_R). (3) When you specify GF on MCCBs with 3 poles the terminal block is automatically fitted to connect with the external neutral CT for 3 phases 4 wires system. See terminal blocks in section 4.

PROTECTION CHARACTERISTICS

ELECTRONIC PROTECTION

Time/Current Characteristic Curves

S1250-SE, S1250-NE, S1250-GE

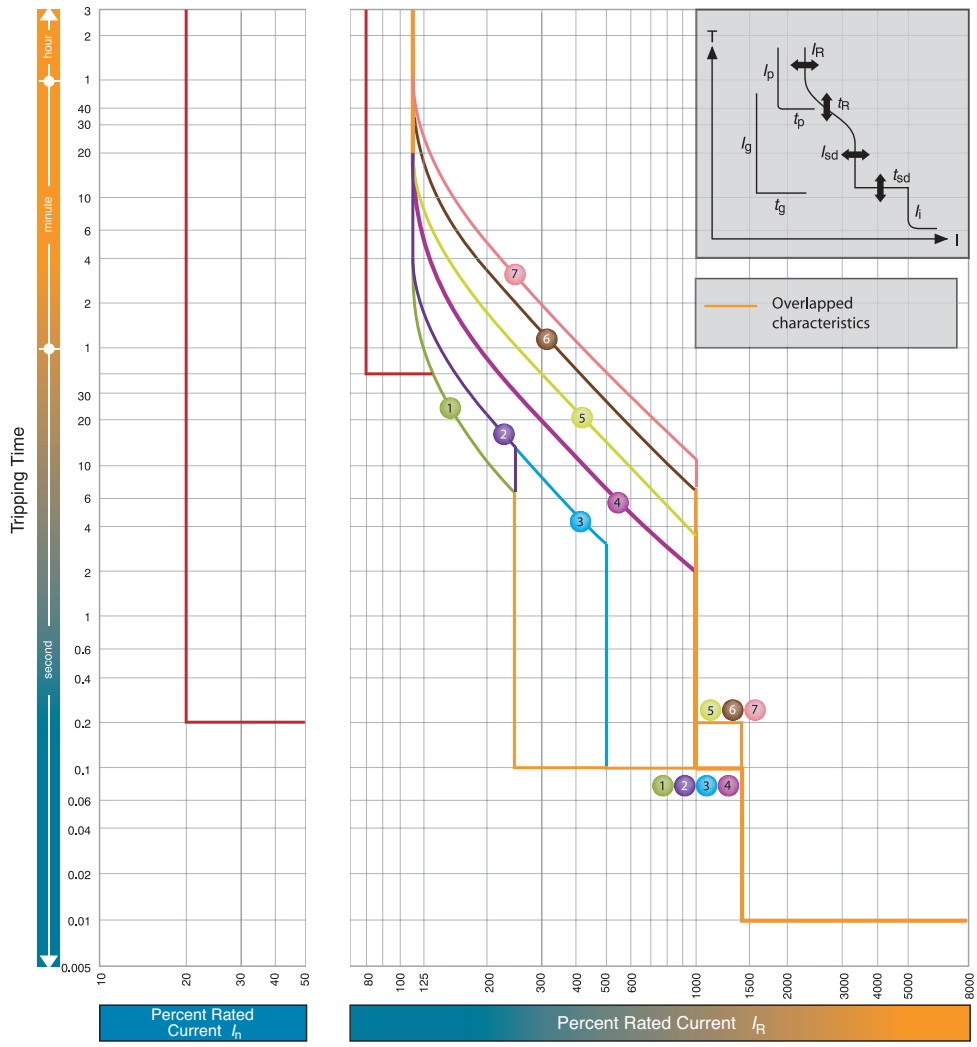

I_n = 1250A

	I_R (A)									
	LTD Pick-up current	I_R	x/n	0.4	0.5	0.63	0.8	0.9	0.95	1.0

	Characteristics		No.	1	2	3	4	5	6	7
Standard	LT	t_R	(s)	11	21	21	5	10	19	29
				at 200% x I_R			at 600% x I_R			
	ST	I_{sd}	xI_R	2.5		5	10			
		t_{sd}	(s)	0.1				0.2		
	INST	I_i	xI_R	14(Max: 12 x I_n) Note (1)						
Option	PTA	I_p	xI_R	0.8						
		t_p	(s)	40						
	GF Note(3)	I_g	xI_n	0.2						
		t_g	(s)	0.2						
	NP	I_N	xI_R	1.0/0.5 Note(2)						
		t_N	(s)	t_N=t_R						

Note

(1) I_i max. = 12 x I_n. (2) 1.0 x I_R or 0.5 x I_R can be selected. Characteristic of neutral protection (t_N vs. I_N) is identical to characteristic of phase protection (t_R vs. I_R). (3) When you specify GF on MCCBs with 3 poles the terminal block is automatically fitted to connect with the external neutral CT for 3 phases 4 wires system. See terminal blocks in section 4.

ELECTRONIC PROTECTION

Time/Current Characteristic Curves

S1600-SE, S1600-NE

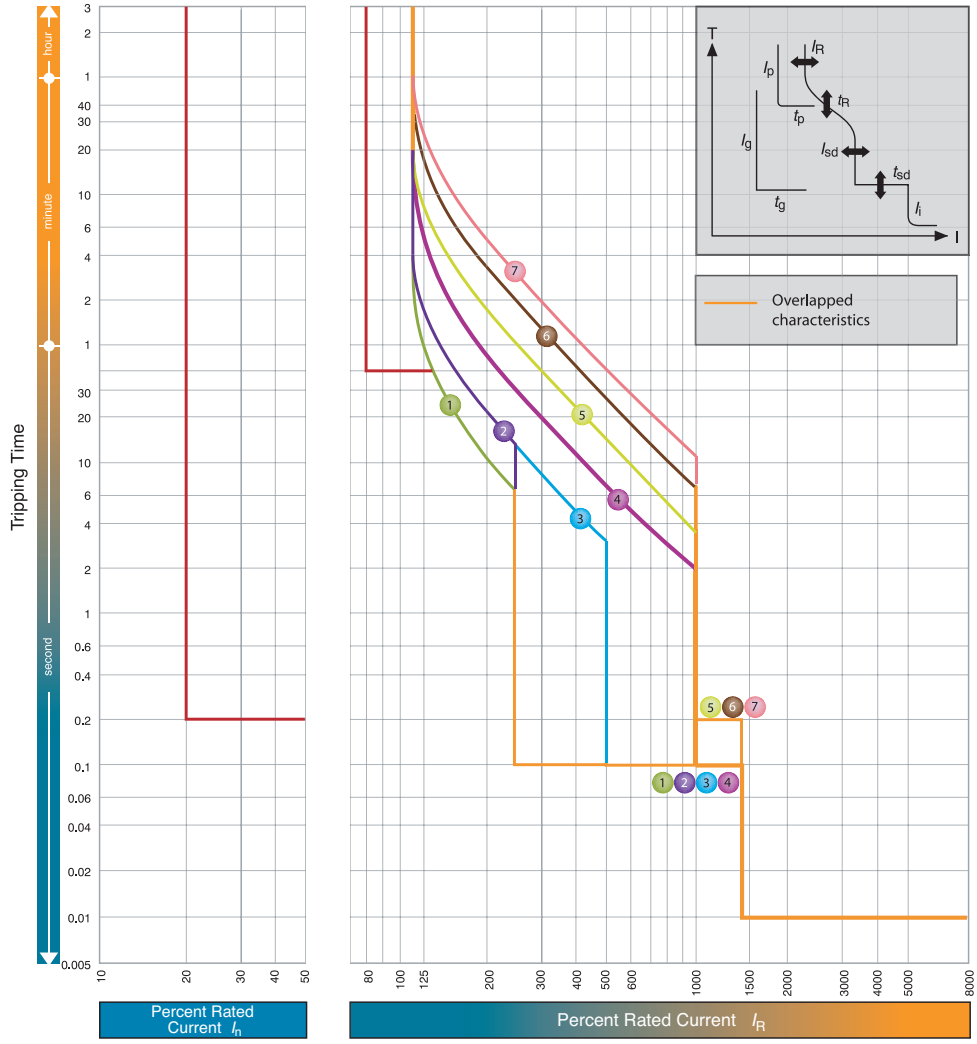

I_n = 1600A

	I_R (A)									
	LTD Pick-up current	I_R	x/n	0.4	0.5	0.63	0.8	0.9	0.95	1.0

	Characteristics		No.	1	2	3	4	5	6	7
Standard	LT	t_R	(s)	11	21	21	5	10	19	29
				at 200% x I_R			at 600% x I_R			
	ST	I_{sd}	x/I_R	2.5		5	10			
		t_{sd}	(s)	0.1				0.2		
	INST	I_i	x/I_R	14(Max: 12 x I_n) Note (1)						
Option	PTA	I_p	x/I_R	0.8						
		t_p	(s)	40						
	GF Note(3)	I_g	x/I_n	0.2						
		t_g	(s)	0.2						
	NP	I_N	x/I_R	1.0/0.5 Note(2)						
		t_N	(s)	t_N=t_R						

Note

(1) I_i max. = 12 x I_n. (2) 1.0 x I_R or 0.5 x I_R can be selected. Characteristic of neutral protection (t_N vs. I_N) is identical to characteristic of phase protection (t_R vs. I_R). (3) When you specify GF on MCCBs with 3 poles the terminal block is automatically fitted to connect with the external neutral CT for 3 phases 4 wires system. See terminal blocks in section 4.

PROTECTION CHARACTERISTICS

ELECTRONIC PROTECTION WITH MEASUREMENT AND DATA COMMUNICATION

Appearance

The TemBreak 2 enhanced electronic breaker with integrated VT and CT monitors the current, voltage, instantaneous electrical power, integrated electrical energy and power factor of a circuit. This breaker using the Modbus protocol allows data such as measured values and event/fault logs to be transmitted to an external device.

- 250A frame models have measurements and data communication options but no LCD window.
- Models of 400A frame and above have an LCD window. The LCD window provides the phase currents, line voltages (and their maximum values), power factor, electrical power and electrical energy. It can also provide the 1st to 19th harmonic currents for each phase.
- When a fault occurs, the cause of the fault and the fault current are indicated on the LCD. Data in memory is stored even if the power is lost. You can view event or fault logs after the power is restored.

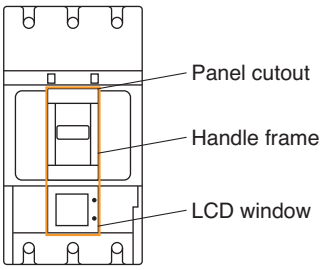

The LCD window is equal to the handle frame in width; the panel cutout can be made easily.

ELECTRONIC PROTECTION WITH MEASUREMENT AND DATA COMMUNICATION

- Models of 400A frame and above are available in three LCD orientations corresponding to the installation orientations of the breaker.

Vertical (move the handle up to ON) (Standard orientation)	Horizontal (move the handle right to ON)	Horizontal (move the handle left to ON)
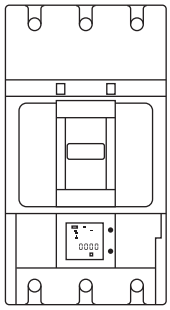	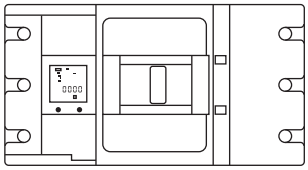	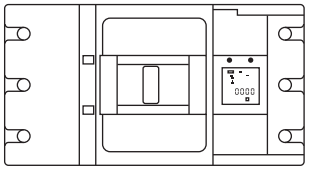

If the breaker is installed in a horizontal orientation, please specify "Horizontal (move the handle right to ON)" or "Horizontal (move the handle left to ON)" when ordering. Otherwise the standard orientation "Vertical (move the handle up to ON)" will apply.

OCR Power Supply for Electronic Protection with Measurement and Data Communication

The XOW OCR, protection relays, requires control power.
The OCR power supply is installed on the right side of the breaker as standard.
This can also be installed separately to the breaker. Please specify when ordering.

● Specifications of OCR power supply (XOW -1)

Note ①: The permissible range of the control voltage is 85 to 110% of the rated voltage. Please specify the rated voltage when ordering.

Note ②: When the OCR power supply is installed on the right side of the breaker, the breaker cannot be equipped with a terminal block for connection to the shunt trip device and under voltage trip device.

Note ③: XOW-2 requires a 24V DC (2W) supply.

Control voltage Note ① (Rated voltage)	100 – 120 VAC or 200 – 240 VAC
Current consumption	2VA

Dimensions of the OCR power supply can be found in Section 6.

PROTECTION CHARACTERISTICS

ELECTRONIC PROTECTION WITH MEASUREMENT AND DATA COMMUNICATION

Available types

	Electronic Protection Code	Protective function				Alarm function	Display	
		Long time-delay trip Short time-delay trip Instantaneous trip	Ground fault trip	N-phase protection	Phase rotation protection	Pre-trip alarm	LCD window	LCD backlight
		A	GF	NP	NS	PTA		
FOR 250 AF	AC	●	—	—	—	—	—	—
	ACN	●	—	●	—	—	—	—
	ACP	●	—	—	—	●	—	—
	ACZ	●	—	—	—	—	—	—
	ACNP	●	—	●	—	●	—	—
	ACNZ	●	—	●	—	—	—	—
	ACPZ	●	—	—	—	●①	—	—
	ACNPZ	●	—	●	—	●①	—	—
FOR 400A TO 1000A	A	●	—	—	—	—	●	●
	AGN	●	●	●	—	—	●	●
	AP	●	—	—	—	●	●	●
	APGNS	●	●	●	●	●	●	●
	APCWH	●	—	—	—	●	●	●
	APGNSCWH	●	●	●	●	●	●	●

● : Standard equipment ○ : Optional — : Not applicable

Note - ① A volt-free output contact is not available. The OCR can send the data via communication.
② The fault sensed data is output only. The OCR can send the fault sensed data to it's upstream TemPower2 OCR.
③ 24V DC only (2W)

Measurement Indication Function Specification XOW - 2 without Display (250AF)

Measurement/event indication		Modbus communication function ○ : Yes —: Non	Note
Load current (±1%)	Present value for each phase	○	Among L1, L2, L3 phases, the phase having the highest current is subject to measurement.
	Present max value	○	
Line voltage (±0.5%)	Present value of each line voltage	○	
	Present max value	○	
	Present phase voltage value for each phase	○	Applies to 4-pole breakers only
Electrical power (±2%)	Present value of active power	○	
	Present value of reactive power	○	
	Present value of apparent power	○	
Demand Electric Power (±2%)	Demand value of active power	○	
	Demand value of reactive power	○	
	Demand value of apparent power	○	
	Max demand value of active power	○	
Electrical energy (±2%)	Active electrical energy	○	
	Reactive electrical energy	○	
	Apparent electrical energy	○	
Power Factor (±0.02%)	Present value	○	
Frequency (±0.1Hz)	Present value	○	
Trip event log	Fault current	○	
	Indication of cause	○	
Alarm event log	Cause of alarm, indication of operated value	○	

Network interface I/O specifications

Item	Modbus line
Communication protocol	RS-485
Communication mode	2-wire, half-duplex
Topology	Multi-drop bus
Transmission rate	19.2 kbps max
Transmission distance	1.2 km max (at 19.2 kbps)
Data format	Modbus-RTU
Max number of nodes	1–31

Note: Electrical energy is stored every 2 hours and the fault current and cause of fault are stored every time a fault occurs in a flash memory.

ELECTRONIC PROTECTION WITH MEASUREMENT AND DATA COMMUNICATION

	Selectivity Function	Measurement/event indication									
	Zone Interlock ②	Load current, Line voltage Electrical power, Electrical energy, Power factor, Demand electrical power	Electrical energy pulse	Harmonic current	Trip event log	Alarm event log	Communication function	External display	Test function	Indication via output contact	Control power supply
	Z		W	H			C	I		Y	
	—	●	—	—	●	●	●	○	—	—	Required③
	—	●	—	—	●	●	●	○	—	—	Required③
	—	●	—	—	●	●	●	○	—	—	Required③
	●	●	—	—	●	●	●	○	—	—	Required③
	—	●	—	—	●	●	●	○	—	—	Required③
	●	●	—	—	●	●	●	○	—	—	Required③
	●	●	—	—	●	●	●	○	—	—	Required③
	●	●	—	—	●	●	●	○	—	—	Required③
	—	●	—	—	●	●	—	—	●	—	Required
	—	●	—	—	●	●	—	—	●	—	Required
	—	●	—	—	●	●	—	—	●	●	Required
	—	●	—	—	●	●	—	—	●	●	Required
	—	●	●	●	●	●	●	○	●	●	Required
	—	●	●	●	●	●	●	○	●	●	Required

Measurement Indication Function Specification XOW - 1S with LCD (400AF - 1000AF)

Measurement/event (accuracy)		Modbus communication function ○ : Yes —: Non	Note
Load current (±1.5%)	Present value for each phase	○	Ground fault current and negative-phase current can be displayed depending on the specifications.
	Present max value	○	Among L1, L2, L3 phases, the phase having the highest current is subject to measurement and the value of the current is displayed.
Line voltage (±1.0%)	Present value of each line voltage	○	
	Present max value	○	
	Present phase voltage value for each phase	○	Applies to 4-pole breakers only.
Harmonic current (±2.5%)	Present value of 3rd, 5th, 7th, ...19th harmonic current for each phase	—	
Electrical power (±2.5%)	Present value	○	
	Demand value	○	
	Max demand value	○	
Electrical energy (±2.5%)	Electrical energy	○	
Power factor (±5%)	Present value	○	
Trip event log	Fault current (±1.5%)	○	
	Indication of cause	○	
Alarm event log	Cause of alarm, Indication of operated value	○	

Note: Electrical energy is stored every hour and the fault current and cause of fault are stored every time a fault occurs in a flash memory.

Network interface I/O specifications

Item	Modbus line
Communication protocol	RS-485
Communication mode	2-wire, half-duplex
Topology	Multi-drop bus
Transmission rate	19.2 kbps max
Transmission distance	1.2 km max (at 19.2 kbps)
Data format	Modbus-RTU
Max number of nodes	1–31

PROTECTION CHARACTERISTICS

ELECTRONIC PROTECTION WITH MEASUREMENT AND DATA COMMUNICATION

Time/Current Characteristic Curves

S250-NE, S250-GE, S250-PE, H250-NE

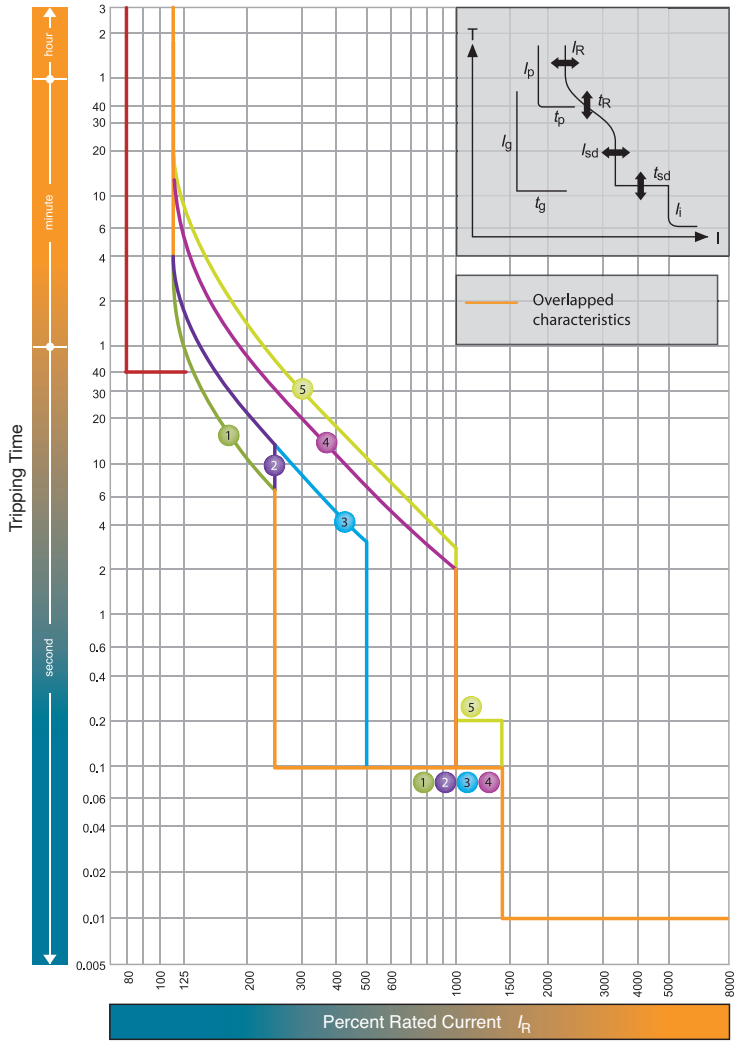

I_n = 250A; 160A; 125A; 40A Note(1)

LTD Pick-up current I_R	x/n	0.4	0.5	0.63	0.8	0.9	0.95	1.0

	Characteristics			No.	1	2	3	4	5
Standard	LT	t_R	(s)		11	21	21	5	7.5
					at 200% x I_R			at 600% x I_R	
	ST	I_{sd}	x/I_R		2.5		5	10	
		t_{sd}	(s)		0.1				0.2
	INST	I_i	x/I_R		14(Max: 13 x I_n) Note (2)				
Option	PTA	I_p	x/I_R		0.8				
		t_p	(s)		40				
	NP	I_N	x/I_R		1.0 Note (3)				
		t_N	(s)		$t_N = t_R$				

Note
(1) For Plug-in (PM), max. setting for I_R should be less than 225A. When I_n=250A, I_R should be I_n×0.9 or less.
(2) I_i max. = 13 x I_n. (3) Characteristic of neutral protection (t_N vs. I_N) is identical to characteristic of phase protection (t_R vs. I_R).

ELECTRONIC PROTECTION WITH MEASUREMENT AND DATA COMMUNICATION

400A and Above

Applicable MCCB type	CT rated primary current I_{CT}
S400-NE, S400-GE, S400-PE, H400-NE, L400-NE	250A
	400A
E630-NE, S630-CE, S630-GE	630A
S800-NE, S800-RE, H800NE, L800-NE	630A
	800A
S1000-SE, S1000-NE	1000A

Protective function		Symbol	Setting range
Rated current (A)		I_n	[I_{CT}] x (0.5-0.63-0.8-1.0)
Long time-delay trip LT	Pick-up current (A)	I_R	[I_n] x (0.8-0.85-0.9-0.95-1.0) • Non tripping at not more than [I_R] x 1.05 • Tripping at more than [I_R] x 1.05 and not more than [I_R] x 1.2
	Time-delay (s)	t_R	(0.5-1.25-2.5-5-10-15-20-25-30) (sec) at 600% of [I_R] ① Time-delay setting tolerance: ±20%, +0.13s –0s
	COLD/HOT	—	COLD/HOT
Short time-delay trip ST	Pick-up current (A)	I_{sd}	[I_n] x (1-1.5-2-2.5-3-4-6-8-10-NON) ② Current setting tolerance: ±15%
	Time-delay (s)	t_{sd}	I^2t OFF: 0.05-0.1-0.2-0.3s (Definite time characteristic) I^2t ON: 0.05-0.1-0.2-0.3s (Ramp characteristic at less than 1000% of [I_n], Definite time characteristic at 1000% or more of [I_n]) ③
	I^2t ramp characteristic	—	OFF/ON
Instantaneous trip INST	Pick-up current (A)	I_i	[I_n] x (2-3-4-6-8-10-12-13-14-NON) ④⑤ Current setting tolerance: ±20%
Ground fault trip GF	Pick-up current (A)	I_g	[I_{CT}] x (0.2-0.3-0.4-NON) Current setting tolerance: ±20%
	Time-delay (s)	t_g	I^2t OFF: 0.1-0.2-0.3-0.4-0.8s (Definite time characteristic) Time-delay setting tolerance: +50ms –20ms I^2t ON: 0.1-0.2-0.3-0.4-0.8s (Ramp characteristic at less than 40% of [I_{CT}], Definite time characteristic at 40% or more of [I_{CT}]) Time-delay setting tolerance: ±15%, +50ms –20ms
	I^2t ramp characteristic	—	OFF/ON
	Mode	—	TRIP/OFF ⑥
N-phase protection NP	Pick-up current (A)	I_N	[I_{CT}] x (0.4-0.5-0.63-0.8-1.0-NON) • Non tripping at not more than [I_N] x 1.05 • Tripping at more than [I_N] x 1.05 and not more than [I_N] x 1.2
	Time-delay (s)	t_N	Tripping at 600% of [I_N] with LT time-delay [t_R].
	COLD/HOT	—	COLD/HOT
Phase rotation protection NS	Pick-up current (A)	I_{NS}	[I_n] x (0.2-0.3-0.4-0.5-0.6-0.7-0.8-0.9-1.0) Current setting tolerance: ±10%
	Time-delay (s)	t_{NS}	(0.4-0.8-1.2-1.6-2.0-2.4-2.8-3.2-3.6-4.0) (sec) at 150% of [I_{NS}] Time-delay setting tolerance: ±20%, +0.13s –0s
	Mode	—	TRIP/OFF ⑥
Pre-trip alarm PTA	Pick-up current (A)	I_P	[I_n] x (0.7-0.8-0.9-1.0) Current setting tolerance: ±10%
	Time-delay (s)	t_P	5-10-15-20-40-60-80-120-160-200s more than [I_P] Time-delay setting tolerance: ±10%, +0.1s –0s
	Mode	—	AL/OFF ⑥

Note ①: For E630, S630, S1000, (0.5-1.25-2.5-5-10-15-16)sec.
②: For E630, S630, S1000, [I_n] x (1-1.5-2-2.5-3-4-6-8-NON).
③: For E630, S630, S1000, 800% or more [I_n].
④: The max. pick-up current is set to 1300% x [I_{CT}] for S400, H400 and L400, 1000% x [I_{CT}] for E630, S630 and S1000, 1200% x [I_{CT}] for S800, H800 and L800.
⑤: When the short time delay trip function has been set to NON, the instantaneous trip function cannot be set to NON. When the instantaneous trip function has been set to NON, the short time delay trip function cannot be set to NON.
⑥: Selecting "OFF" disables protective functions.
Unless otherwise specified when ordering, the settings will default to those underlined in the table above.

PROTECTION CHARACTERISTICS

ELECTRONIC PROTECTION WITH MEASUREMENT AND DATA COMMUNICATION

Long time-delay and instantaneous trip

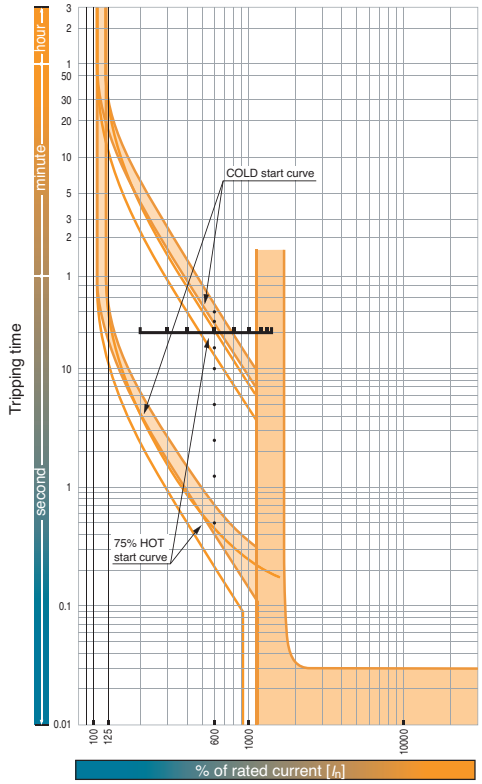

Short time-delay trip

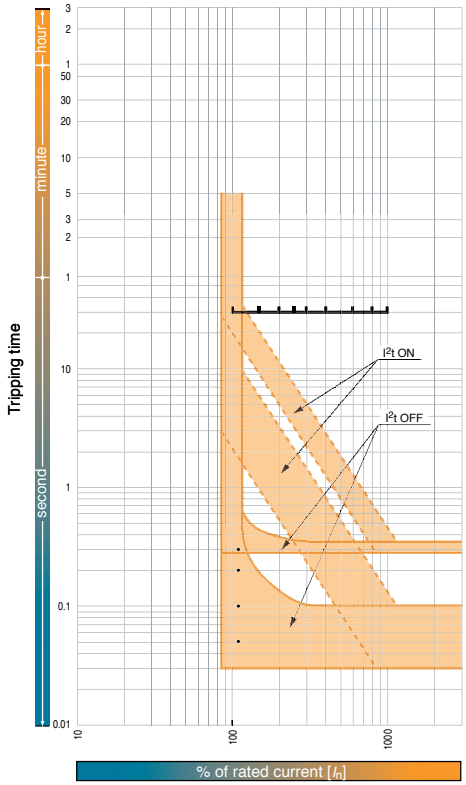

N-phase protection and ground fault trip

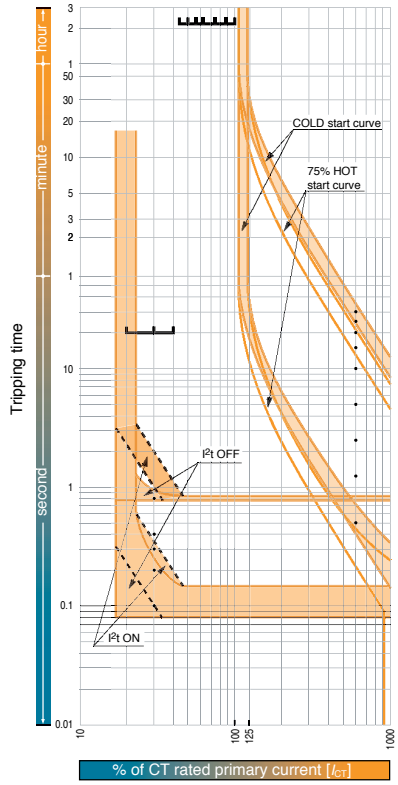

Phase rotation protection and pre-trip alarm

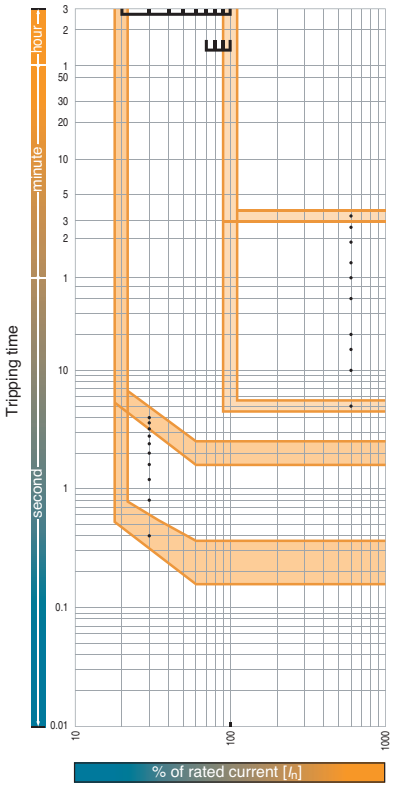

ELECTRONIC PROTECTION: LET-THROUGH CHARACTERISTICS

Let-Through Peak Current Characteristics

S250-NE, S250-GE, S250-PE, H250-NE. 380/415/440V AC.

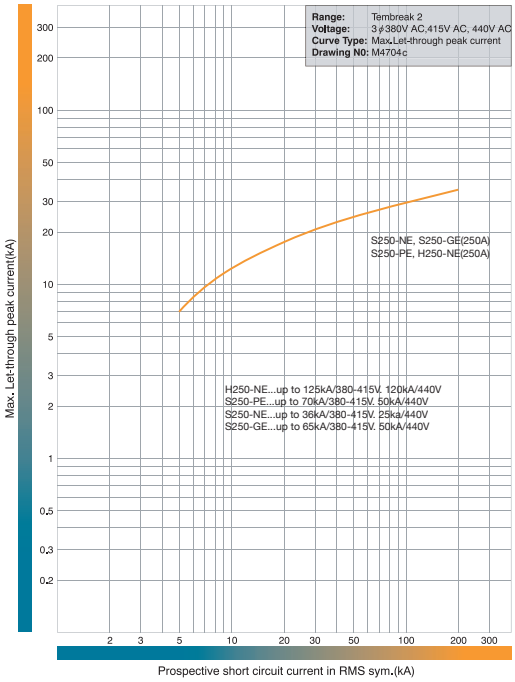

Let-Through Peak Current Characteristics

S250-NE, S250-GE, S250-PE, H250-NE. 690V AC.

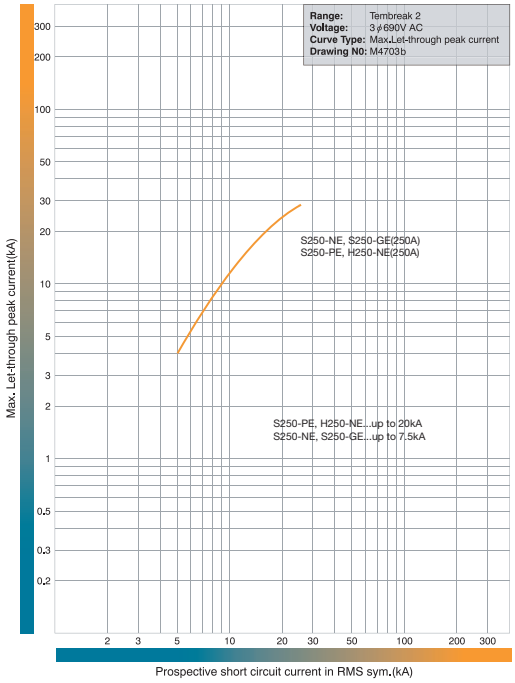

Let-Through Peak Current Characteristics

S400-NE, S400-GE, S400-PE. 415V AC.

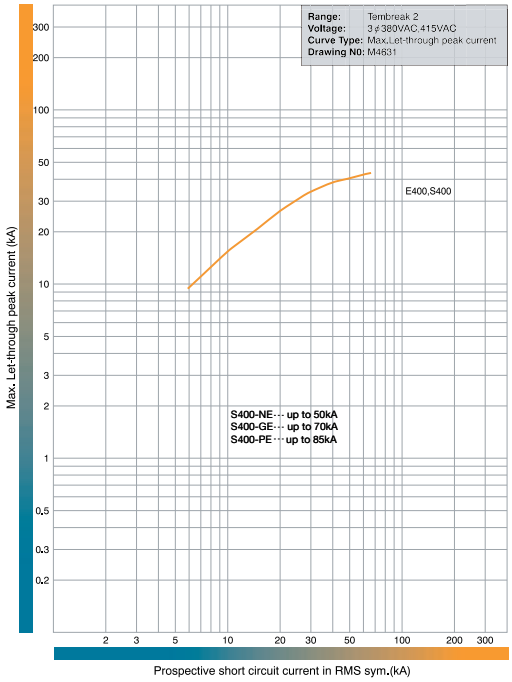

Let-Through Peak Current Characteristics

S400-NE, S400-GE, S400-PE. 690V AC.

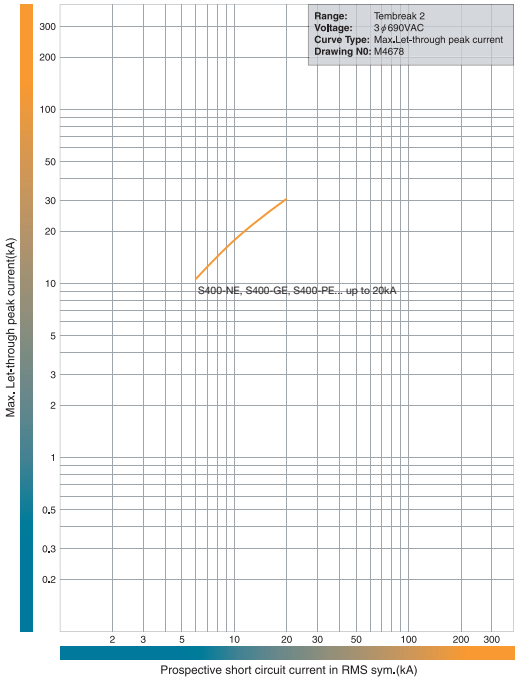

PROTECTION CHARACTERISTICS

ELECTRONIC PROTECTION: LET-THROUGH CHARACTERISTICS

Let-Through Peak Current Characteristics

H400-NE, L400-NE. 415V AC.

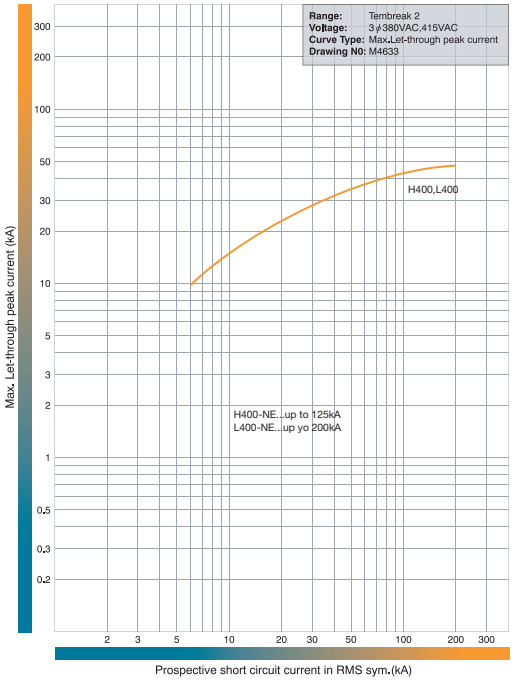

Let-Through Peak Current Characteristics

E630-NE, S630-CE, S630-GE. 415V AC.

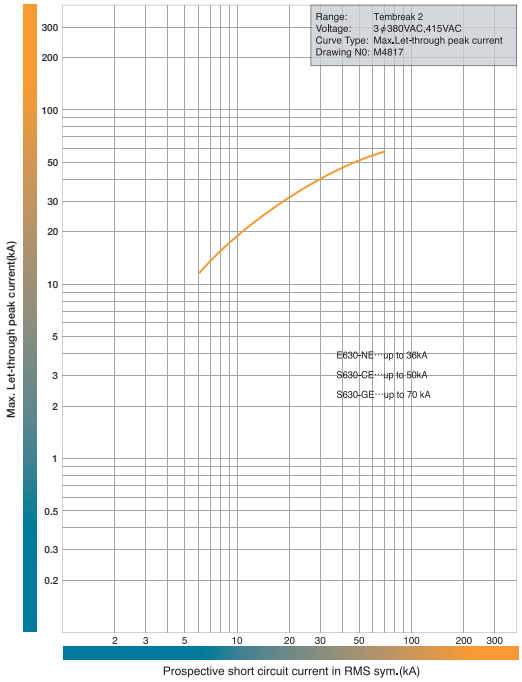

Let-Through Peak Current Characteristics

E630-NE, S630-CE, S630-GE. 690V AC.

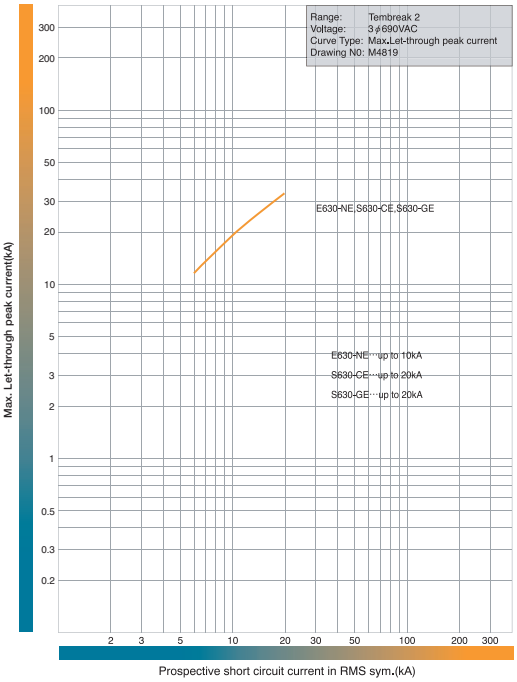

ELECTRONIC PROTECTION: LET-THROUGH CHARACTERISTICS

Let-Through Peak Current Characteristics

S800-NE, S800-RE. 415V AC.

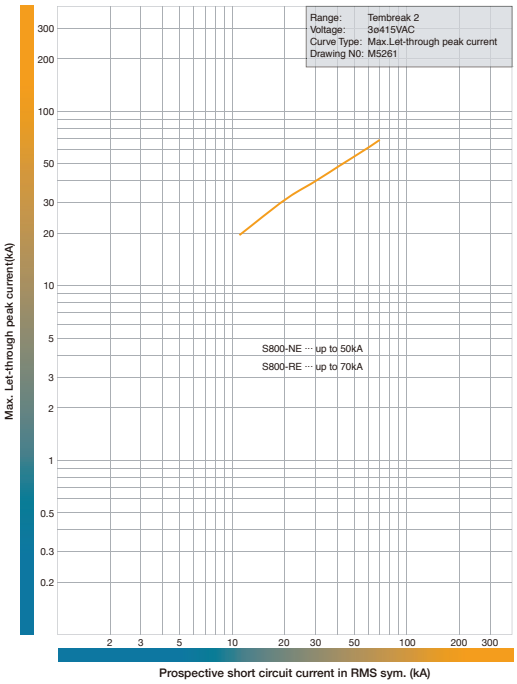

Let-Through Peak Current Characteristics

S800-NE, S800-RE. 690V AC.

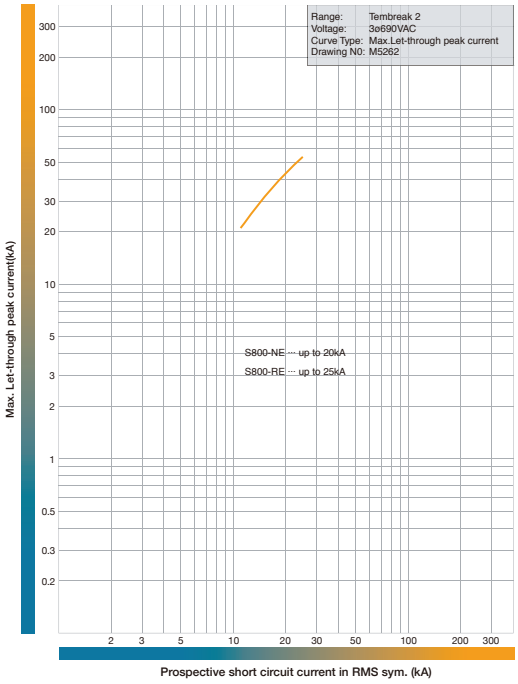

Let-Through Peak Current Characteristics

H800-NE, L800-NE. 415V AC.

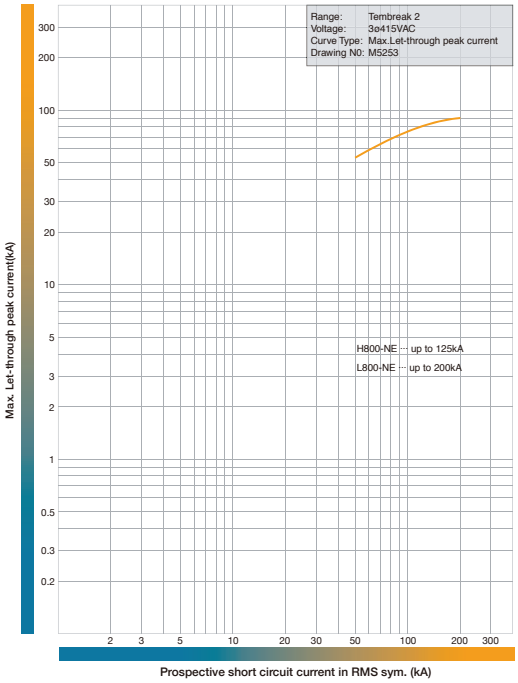

Let-Through Peak Current Characteristics

H800-NE, L800-NE. 690V AC.

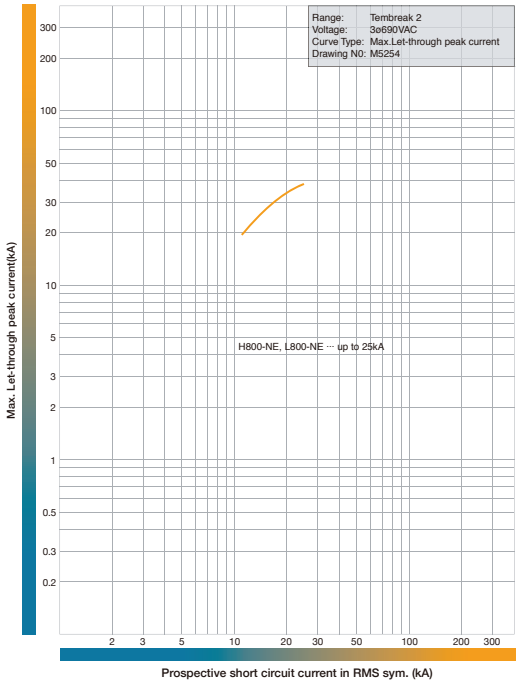

PROTECTION CHARACTERISTICS

ELECTRONIC PROTECTION: LET-THROUGH CHARACTERISTICS

Let-Through Peak Current Characteristics

S1000-SE S1000-NE. 415V AC.

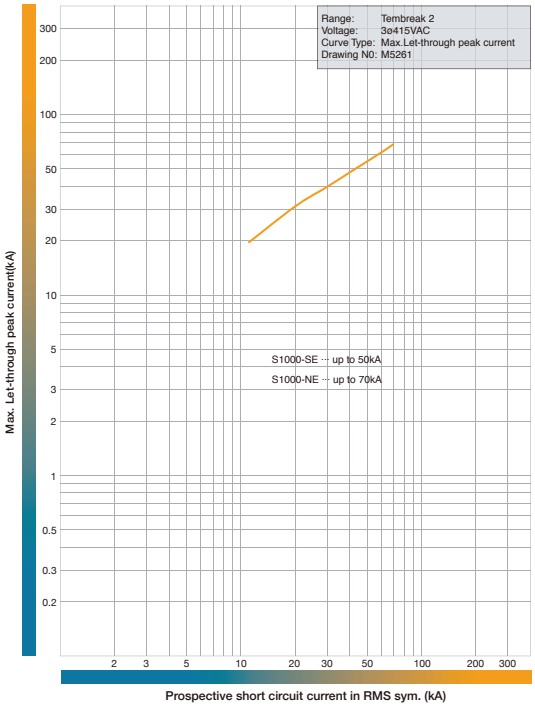

Let-Through Peak Current Characteristics

S1000-SE, S1000-NE. 690V AC.

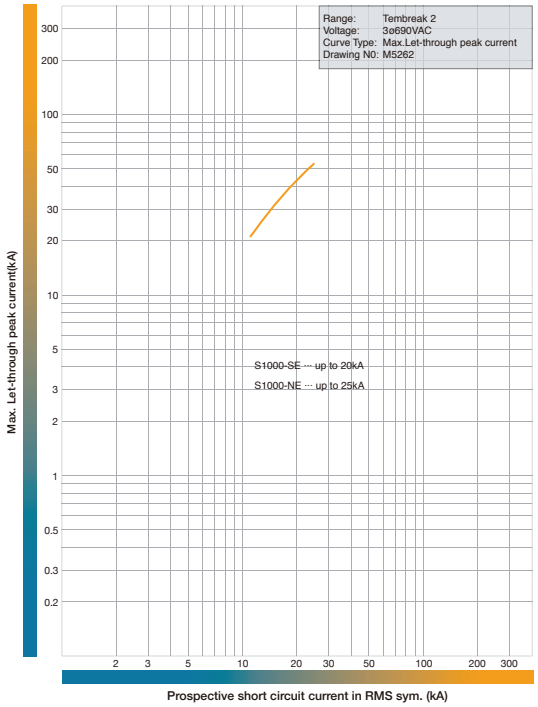

ELECTRONIC PROTECTION: LET-THROUGH CHARACTERISTICS

Let-Through Peak Current Characteristics

S1250-SE, S1250-NE, S1250-GE. 415V AC.

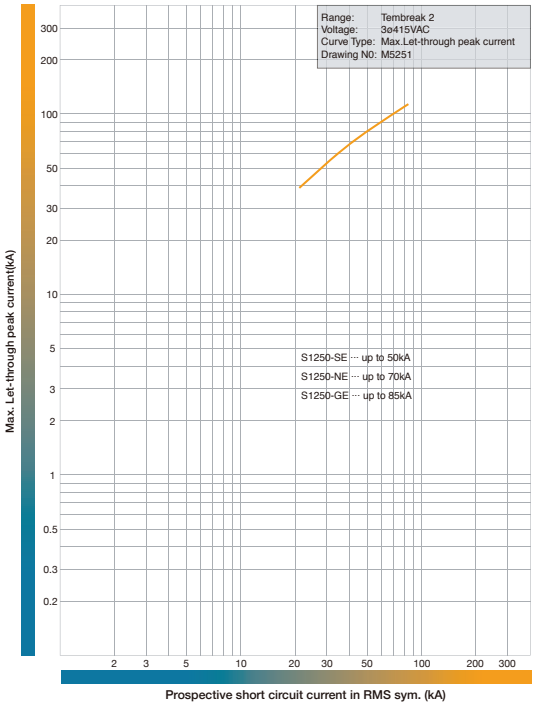

Let-Through Peak Current Characteristics

S1250-SE, S1250-NE, S1250-GE. 690V AC.

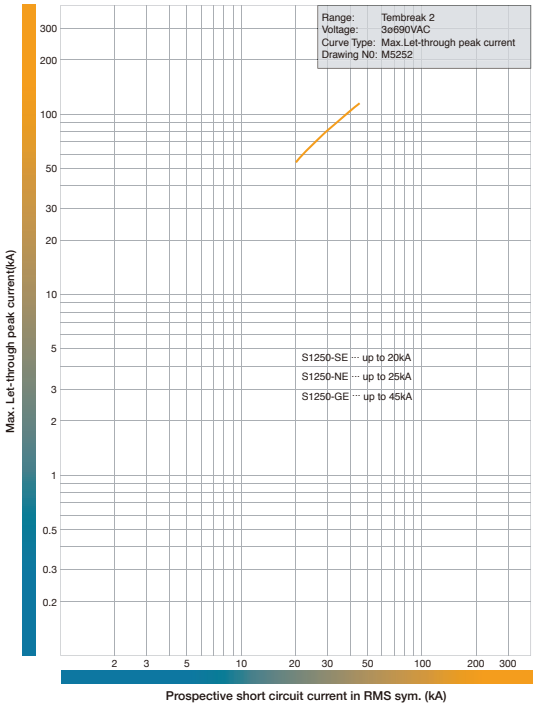

Let-Through Peak Current Characteristics

S1600-SE, S1600-NE. 415V A

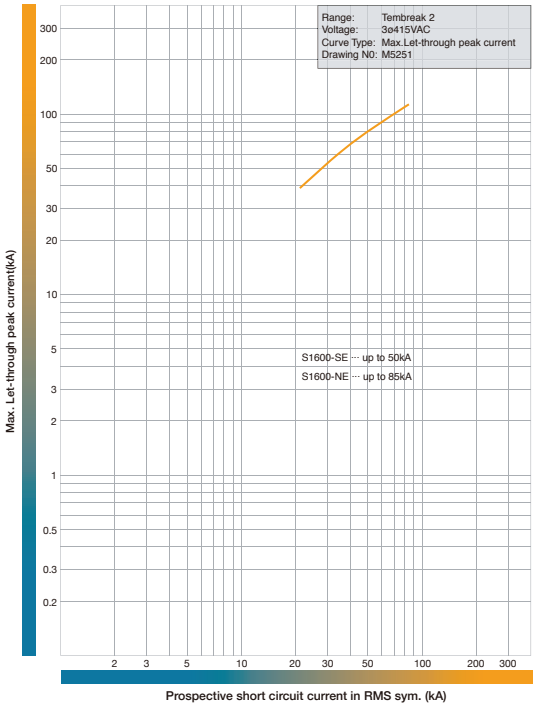

Let-Through Peak Current Characteristics

S1600-SE, S1600-NE. 690V AC.

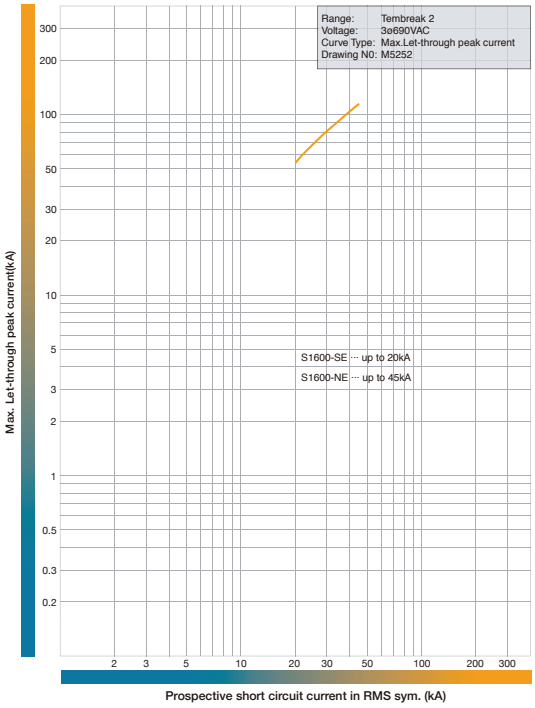

PROTECTION CHARACTERISTICS

ELECTRONIC PROTECTION: LET-THROUGH CHARACTERISTICS

Let-Through Energy Characteristics

S250-NE, S250-GE, S250-PE H250-NE. 380/415/440V AC.

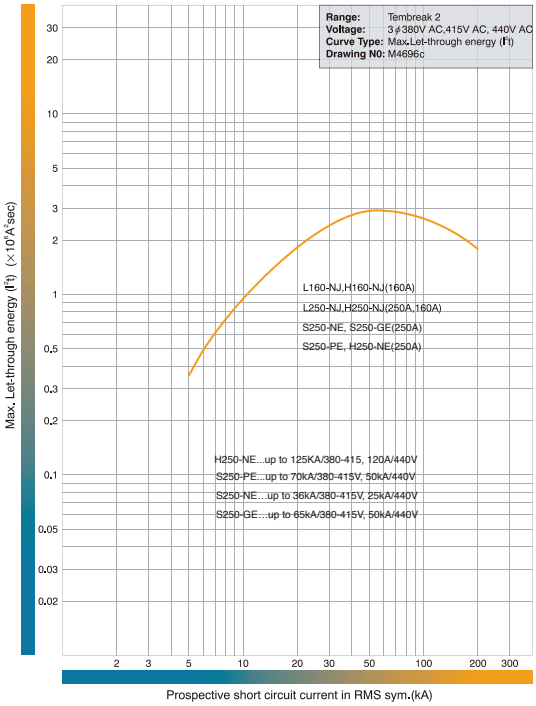

Let-Through Energy Characteristics

S250-NE, S250-GE, S250-PE H250-NE. 690V AC.

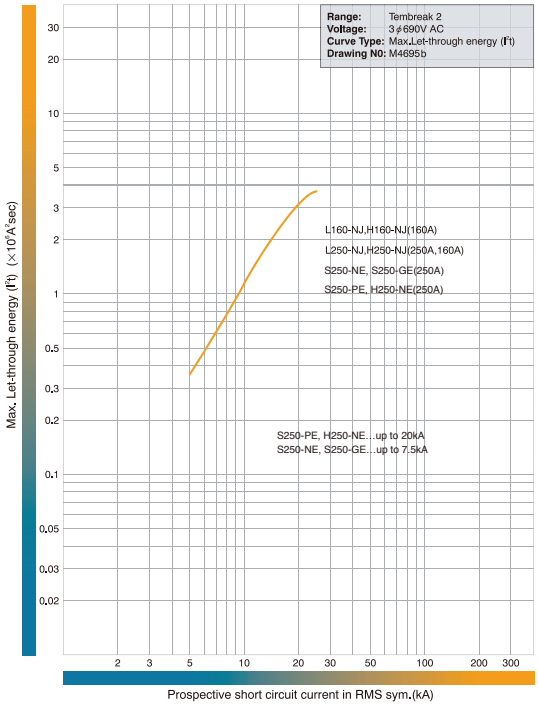

Let-Through Energy Characteristics

S400-NE, S400-GE, S400-PE. 415V AC.

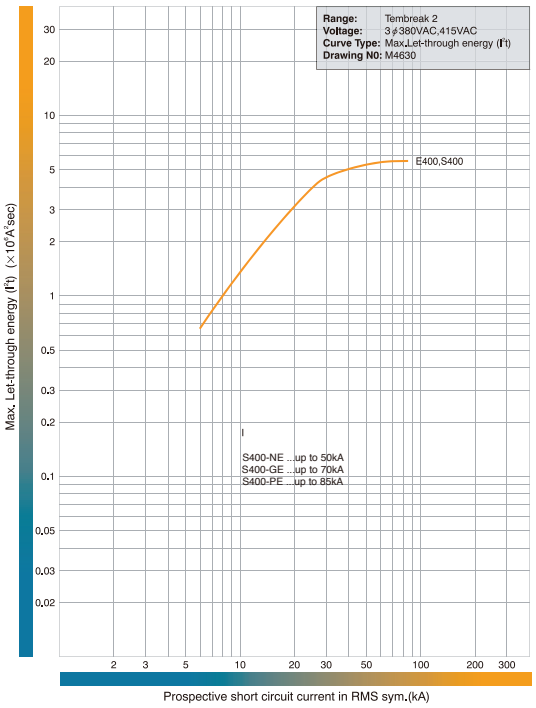

Let-Through Energy Characteristics

S400-NE, S400-GE, S400-PE. 690V AC.

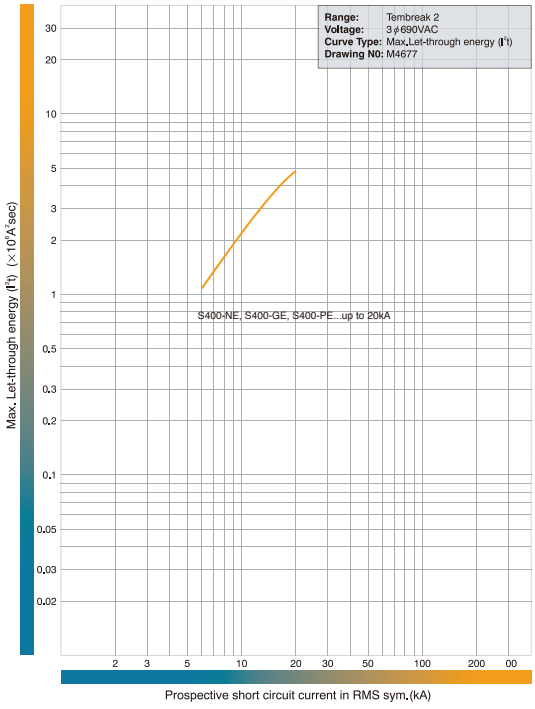

ELECTRONIC PROTECTION: LET-THROUGH CHARACTERISTICS

Let-Through Energy Characteristics

H400-NE, L400-NE. 415V AC.

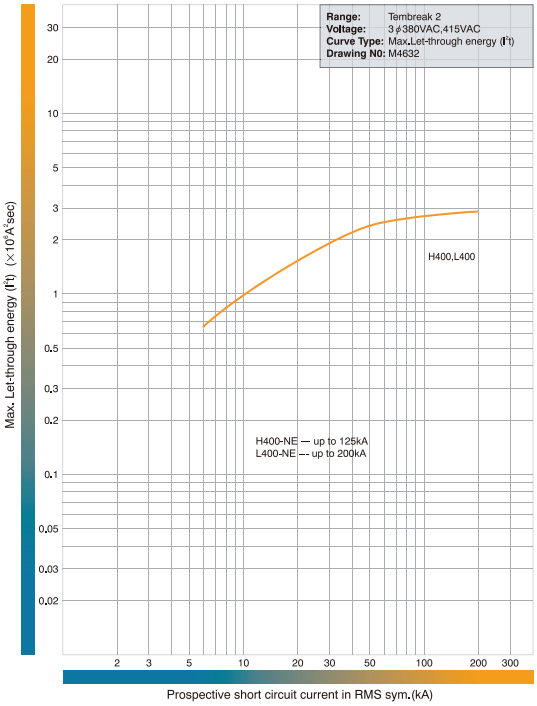

Let-Through Energy Characteristics

E630-NE, S630-CE, S630-GE. 415V AC.

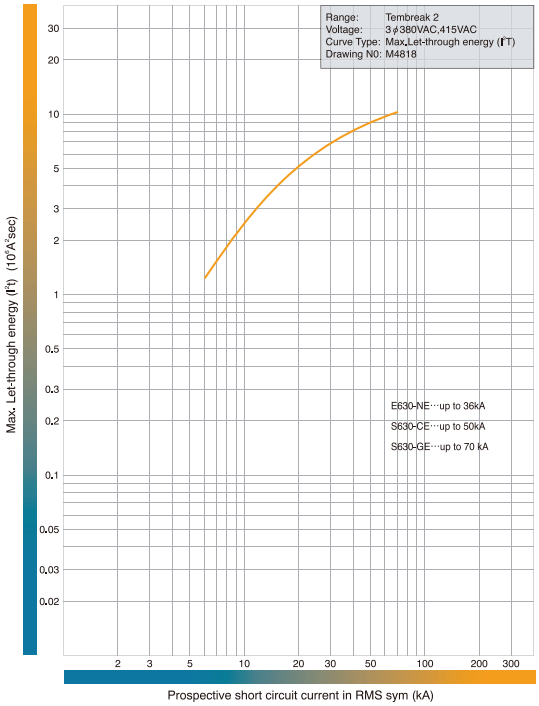

Let-Through Energy Characteristics

E630-NE. S630-CE, S630-GE. 690V AC.

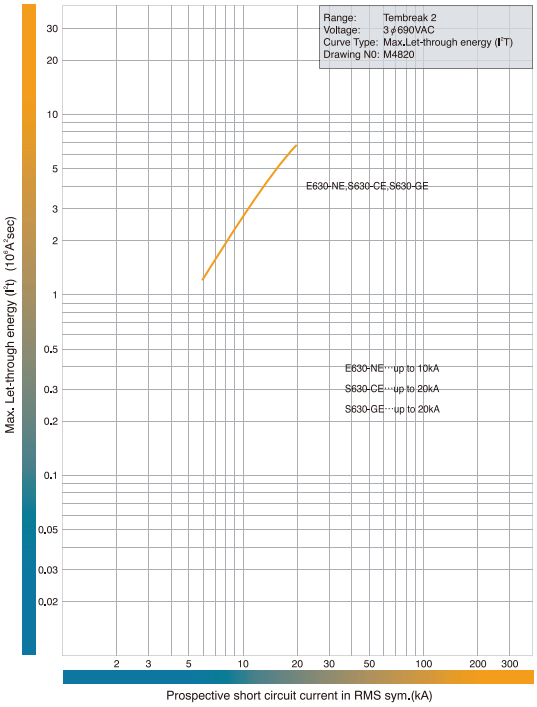

PROTECTION CHARACTERISTICS

ELECTRONIC PROTECTION: LET-THROUGH CHARACTERISTICS

Let-Through Energy Characteristics

S800-NE, S800-RE. 415V AC.

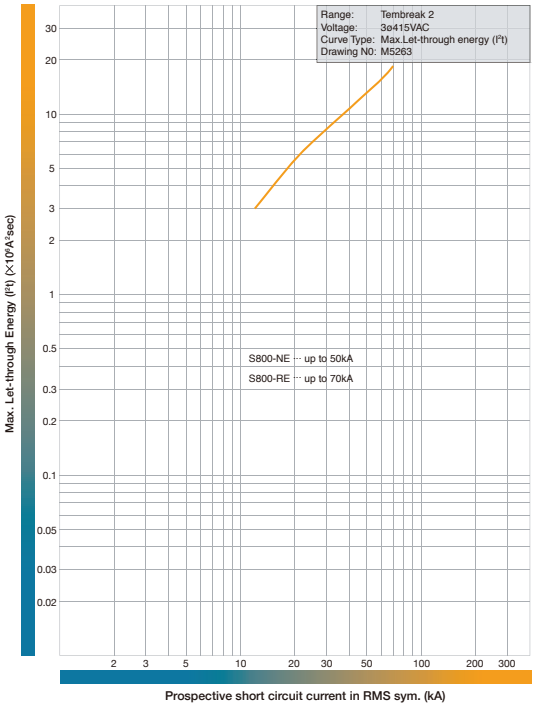

Let-Through Energy Characteristics

S800-NE, S800-RE. 690V AC.

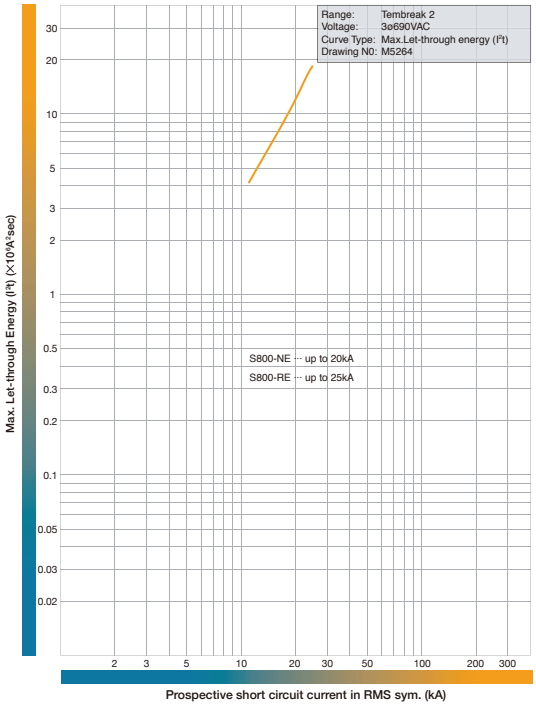

Let-Through Energy Characteristics

H800-NE, L800-NE. 415V AC.

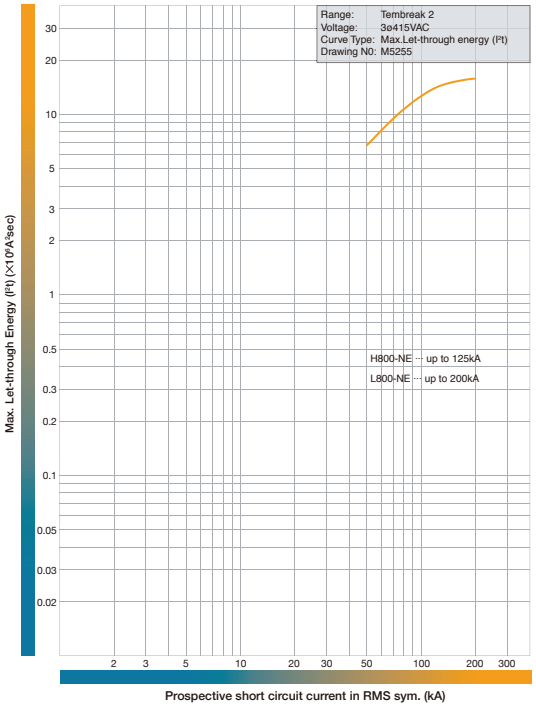

ELECTRONIC PROTECTION: LET-THROUGH CHARACTERISTICS

Let-Through Energy Characteristics

H800-NE, L800-NE. 690V AC.

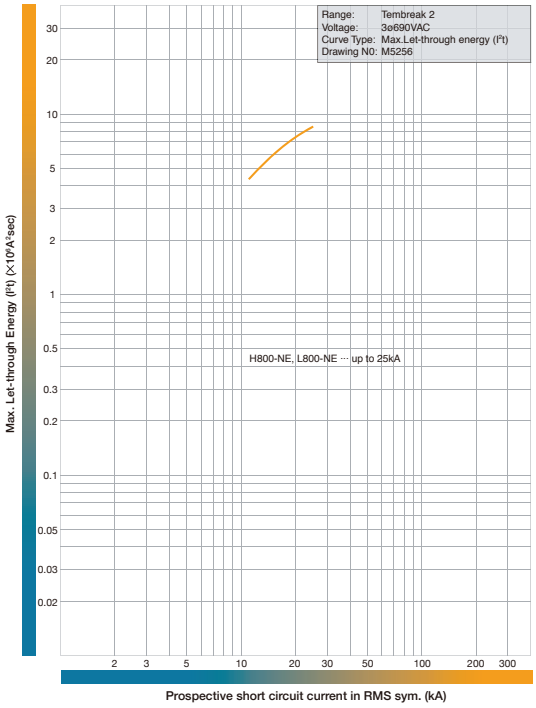

Let-Through Energy Characteristics

S1000-SE, S1000-NE. 415V AC.

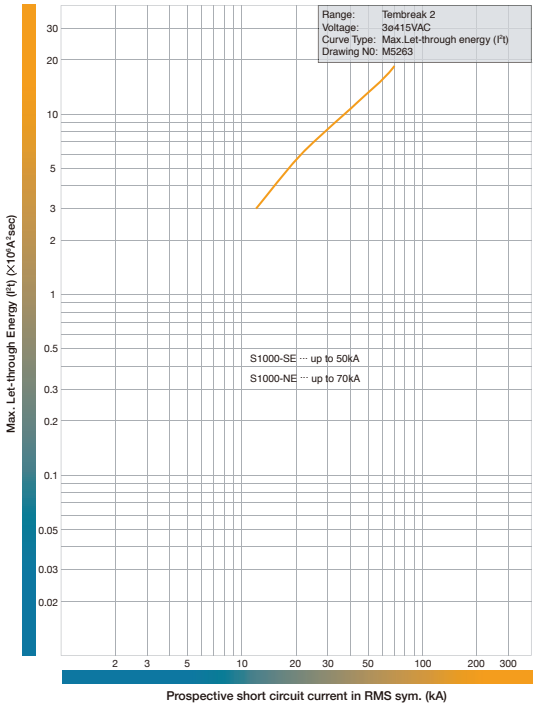

Let-Through Energy Characteristics

S1000-SE, S1000-NE. 690V AC.

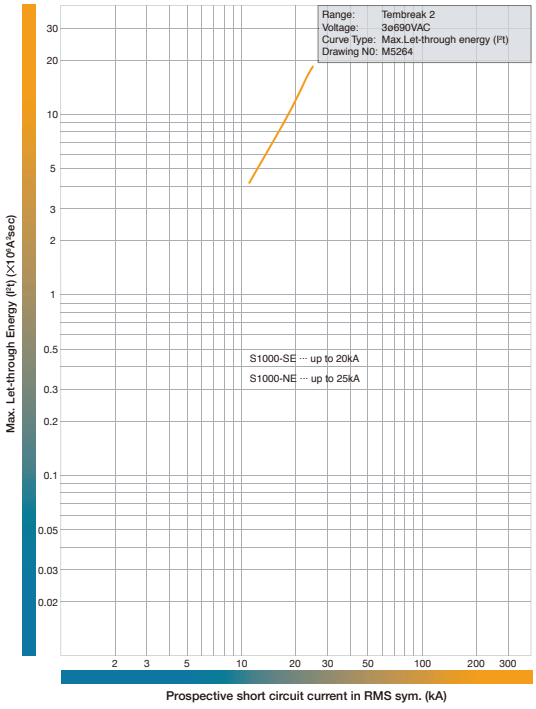

Let-Through Energy Characteristics

S1250-SE, S1250-NE, S1250-GE. 415V AC.

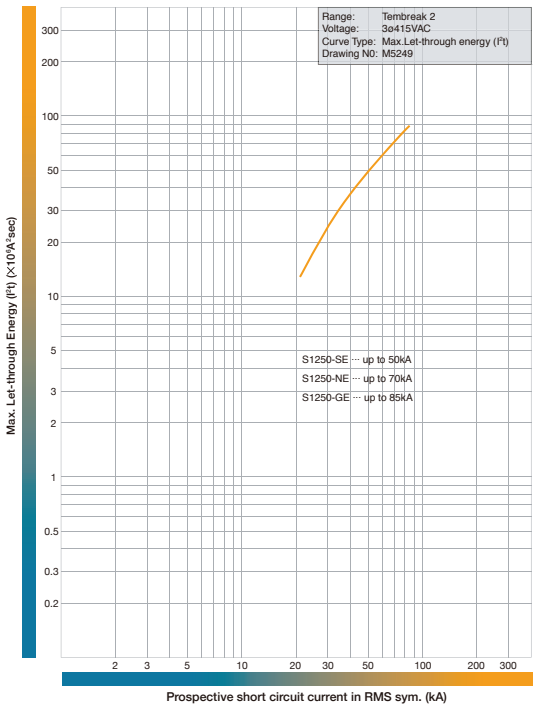

PROTECTION CHARACTERISTICS

ELECTRONIC PROTECTION: LET-THROUGH CHARACTERISTICS

Let-Through Energy Characteristics

S1250-SE, S1250-NE, S1250-GE. 690V AC.

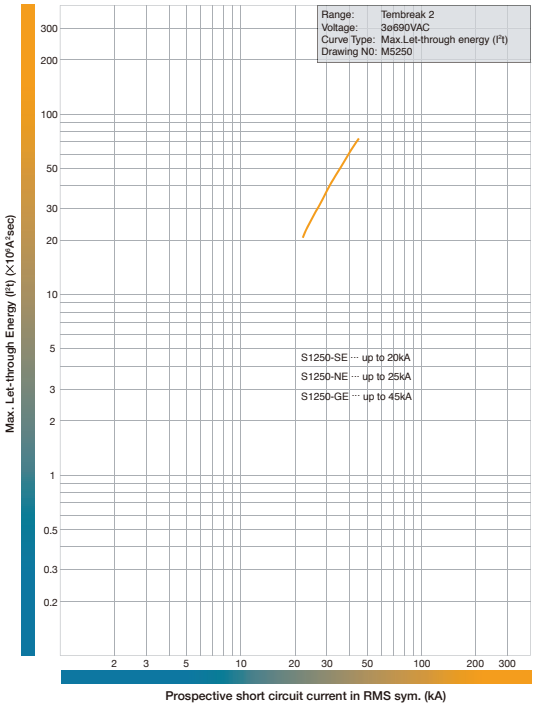

Let-Through Energy Characteristics

S1600-SE, S1600-NE. 415V AC.

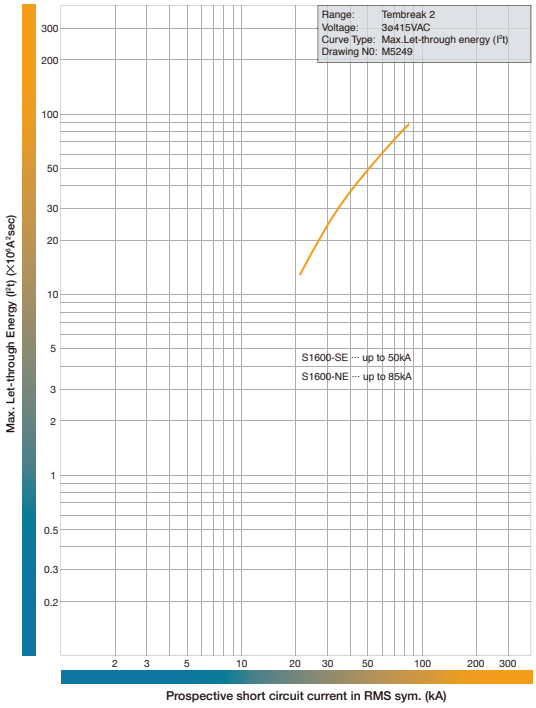

Let-Through Energy Characteristics

S1600-SE, S1600-NE. 690V AC.

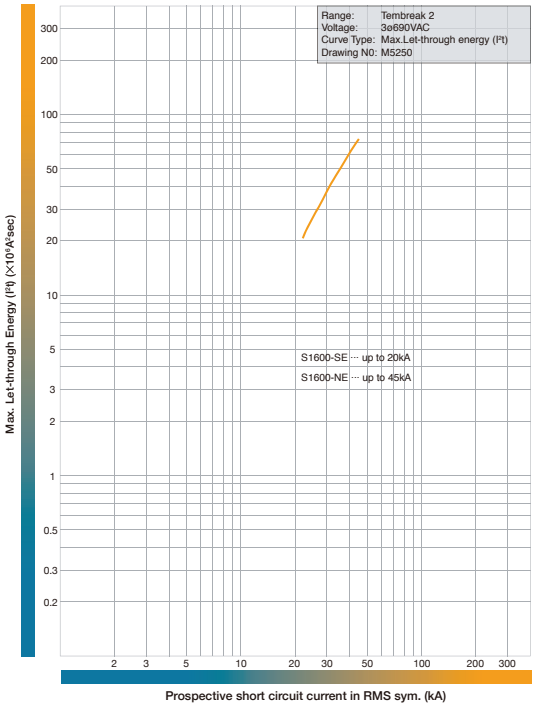

TEMBREAK 2 LITE FIXED PROTECTION

3 Pole MCCB with Fixed Characteristics

1 Pole MCCB with Fixed Characteristics

TemBreak 2 Lite MCCBs are available in 160A and 250A frame sizes. Interrupting capacities of 16kA, 25kA and 40kA are offered in 3 and 4 poles versions. MCCBs with fixed thermal and fixed magnetic protection characteristics offer economic solutions for electrical power distribution networks.

160A TemBreak 2 Lite MCCBs are extremely compact in size (W75 H130 D68) and offer space saving solutions for electrical power distribution where size is critical.

PROTECTION CHARACTERISTICS

TEMBREAK 2 LITE FIXED PROTECTION

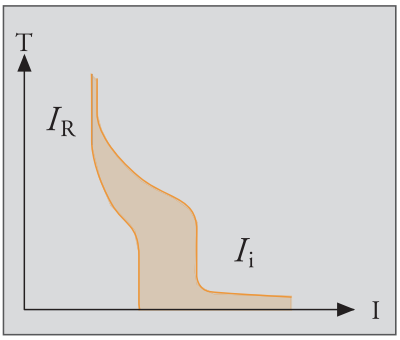

Fixed Characteristic MCCB

1. I_R is the thermal protection element. It is fixed at I_n, the nominal current rating of the circuit breaker, I_n should be selected to match the conductor rating.

2. I_i is the tripping threshold of the magnetic short circuit protection element.

Models, Ratings and Settings

Model	Type	Rated current In(A)	Magnetic trip current Ii (A)
E160 (1P)	-SF	16, 20, 25, 32, 40, 50,	600
		63, 80,	1000
		100, 125	1500
E160	-SF	16, 20, 25, 32, 40, 50,	600
		63, 80,	1000
		100, 125	1500
		160	1600
S160	-SCF	16, 20, 25, 32, 40, 50,	600
		63, 80,	1000
		100, 125	1500
		160	1600
S160	-SF	16, 20, 25, 32, 40, 50,	600
		63, 80,	1000
		100, 125	1500
		160	1600
E250	-SCF	125, 150	*13 x In*
		175, 200, 225	*13 x In*
		250	*11 x In*
E250	-SF	125, 150	*13 x In*
		175, 200, 225	*13 x In*
		250	*11 x In*
S250	-SF	125, 150	*13 x In*
		175, 200, 225	*13 x In*
		250	*11 x In*

Magnetic trip tolerance +/- 20%

TEMBREAK 2 LITE FIXED PROTECTION

Time/Current Characteristic Curves

E160-SF (Single Pole)

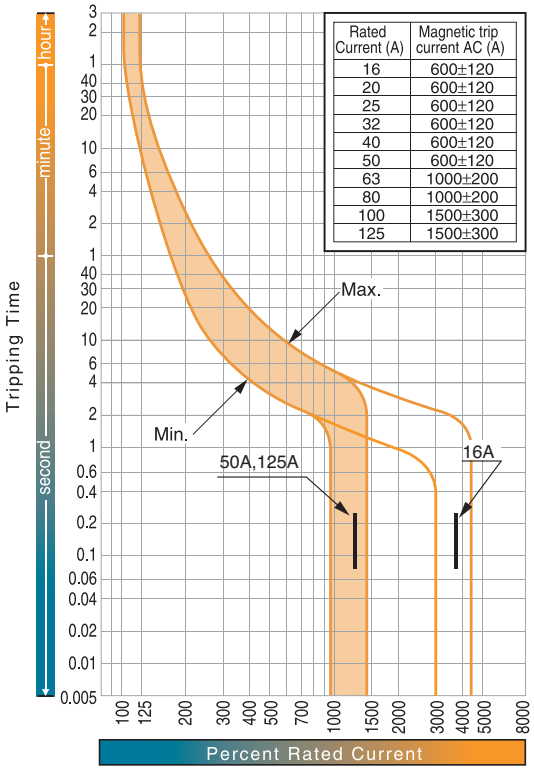

Rated Current (A)	Magnetic trip current AC (A)
16	600±120
20	600±120
25	600±120
32	600±120
40	600±120
50	600±120
63	1000±200
80	1000±200
100	1500±300
125	1500±300

Time/Current Characteristic Curves

E160-SF, S160-SCF, S160-SF

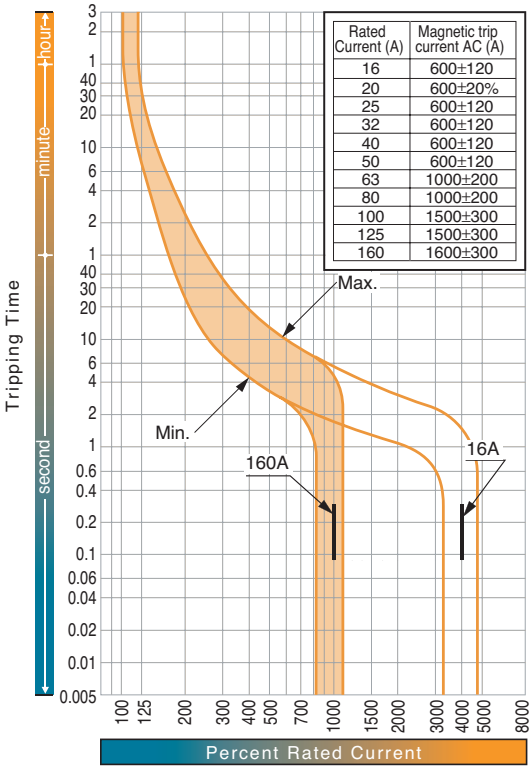

Rated Current (A)	Magnetic trip current AC (A)
16	600±120
20	600±20%
25	600±120
32	600±120
40	600±120
50	600±120
63	1000±200
80	1000±200
100	1500±300
125	1500±300
160	1600±300

Time/Current Characteristic Curves

E250-SCF, E250-SF, S250-SF

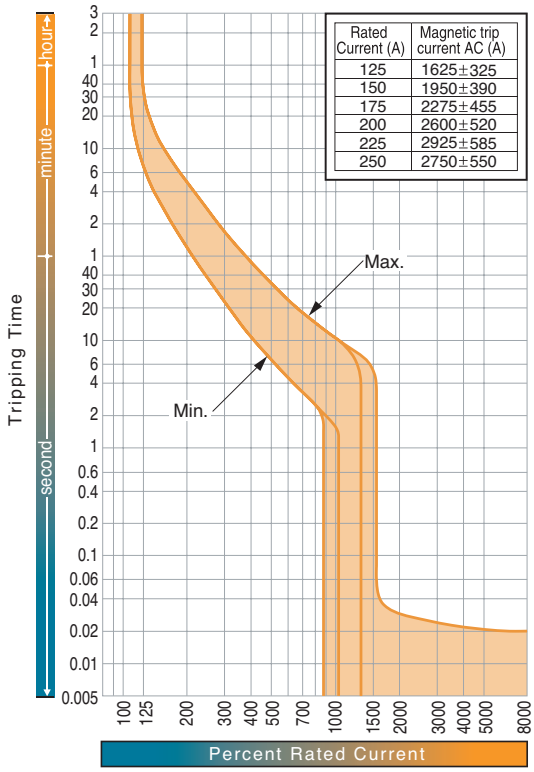

Rated Current (A)	Magnetic trip current AC (A)
125	1625±325
150	1950±390
175	2275±455
200	2600±520
225	2925±585
250	2750±550

PROTECTION CHARACTERISTICS

TEMBREAK 2 LITE FIXED PROTECTION

Let-Through Peak Current Characteristics

E160-SF, S160-SCF, S160-SF. 415V AC.

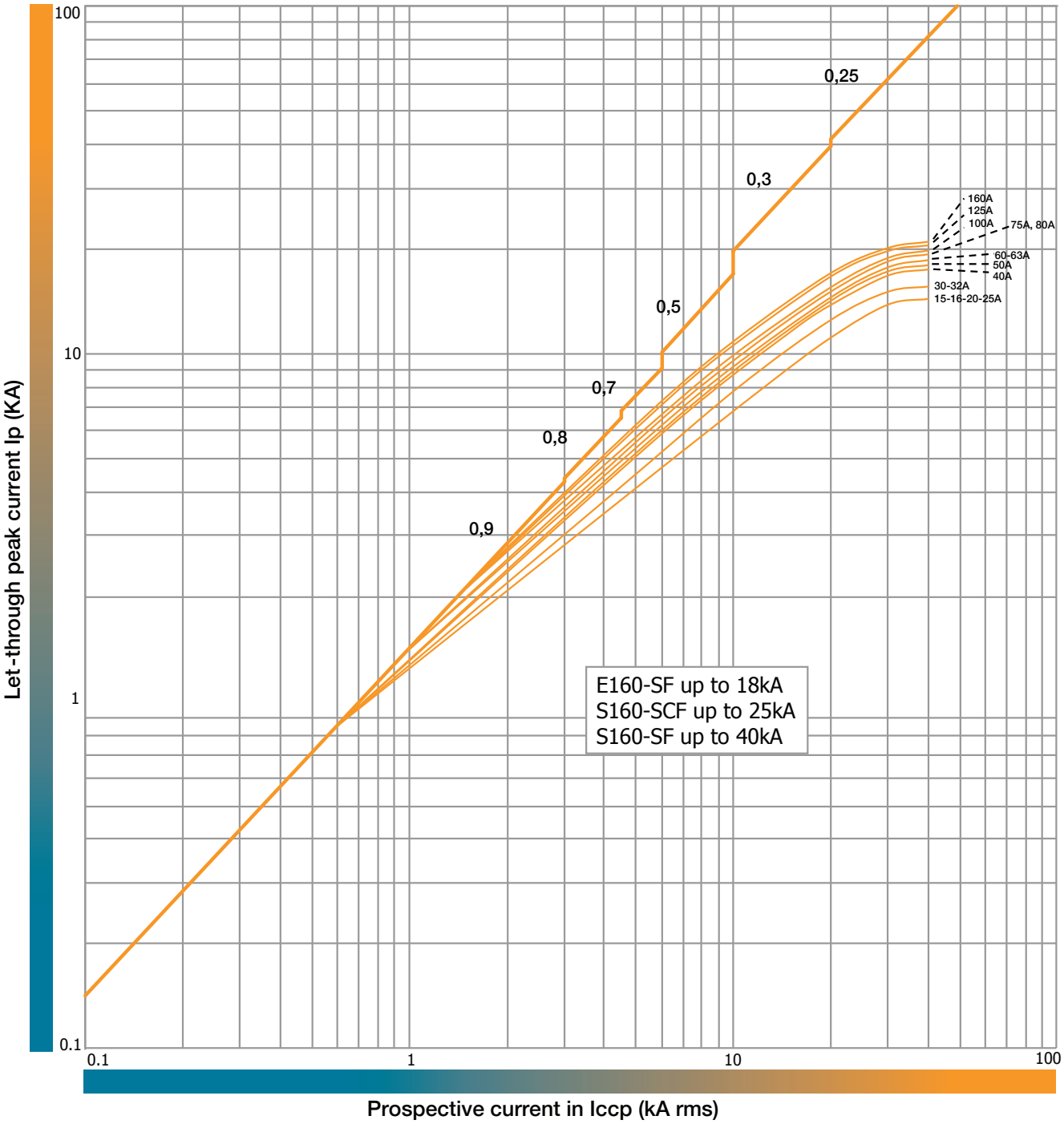

TEMBREAK 2 LITE FIXED PROTECTION

Let-Through Peak Current Characteristics

E250-SCF, E250-SCJ, E250-SF, E250-SJ, S250-SF, S250-SJ. 415V AC.

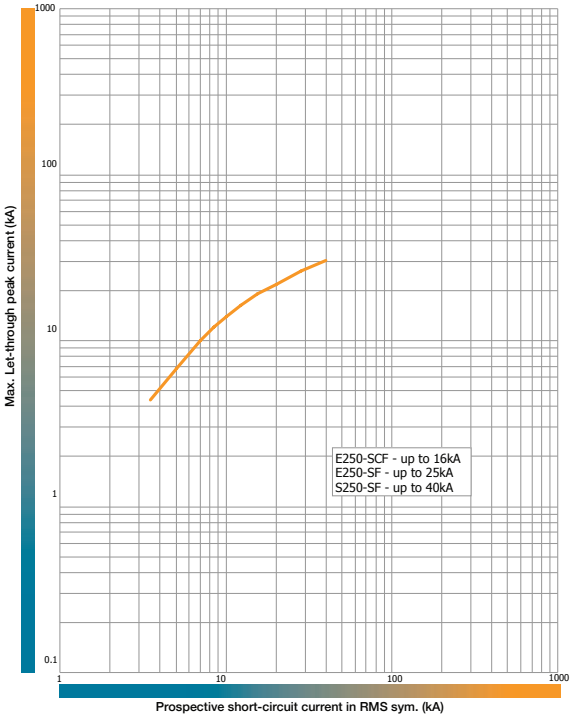

Let-Through Peak Current Characteristics

E250-SCF, E250-SCJ, E250-SF, E250-SJ, S250-SF, S250-SJ. 440V AC.

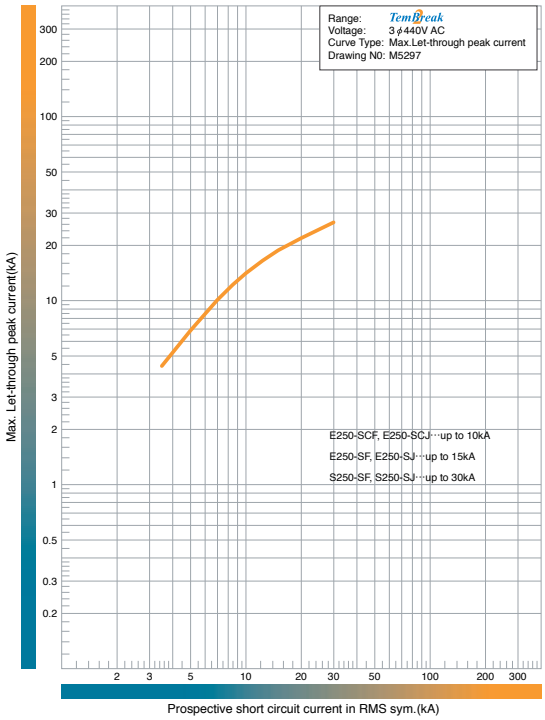

TEMBREAK 2 LITE FIXED PROTECTION

Max. Let-Through Energy Characteristics

E160-SF, S160-SCF, S160-SF. 415V AC.

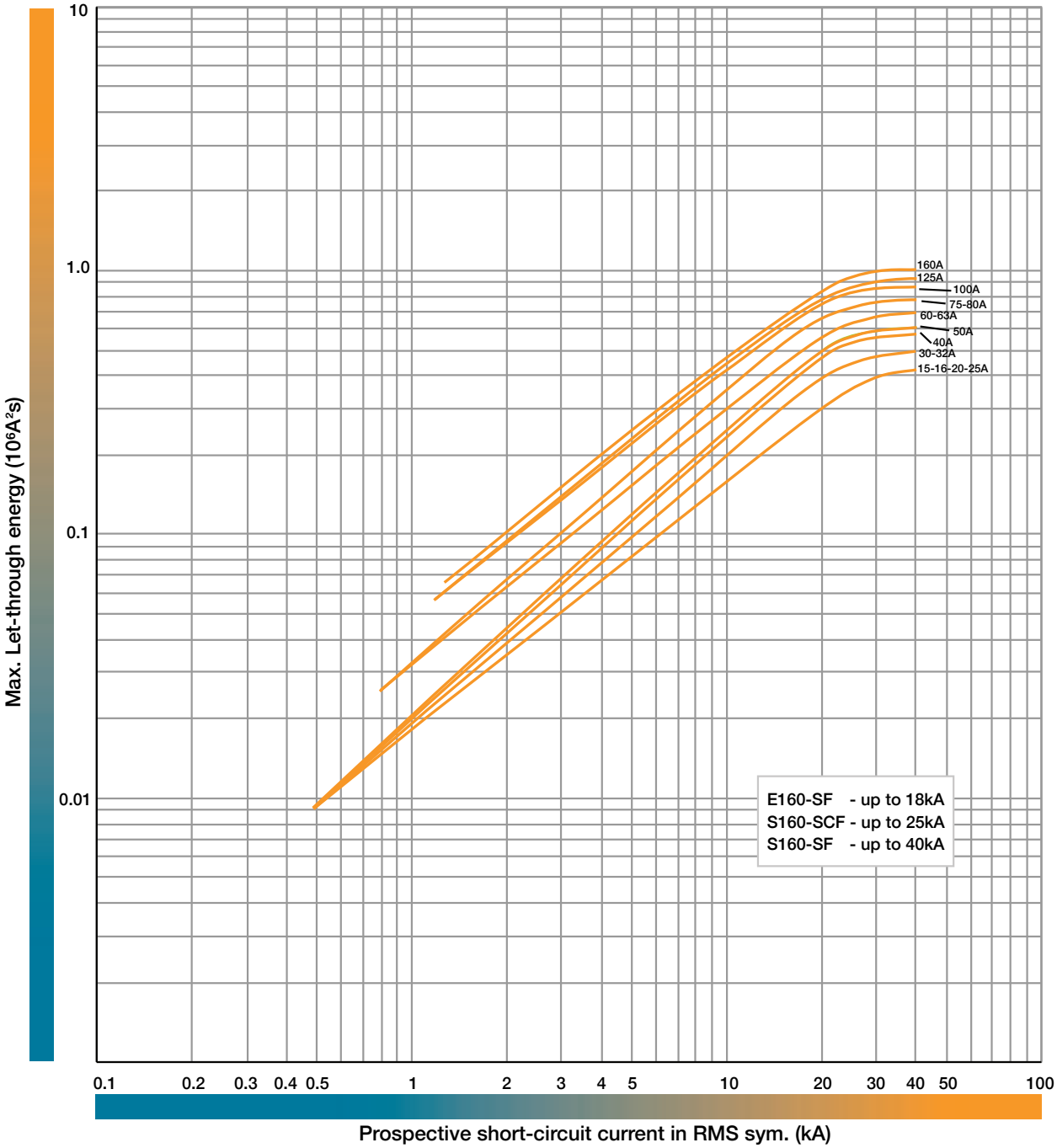

PROTECTION CHARACTERISTICS

TEMBREAK 2 LITE FIXED PROTECTION

Let-Through Energy Characteristics

E250-SCF, E250-SF, S250-SF. 415V AC.

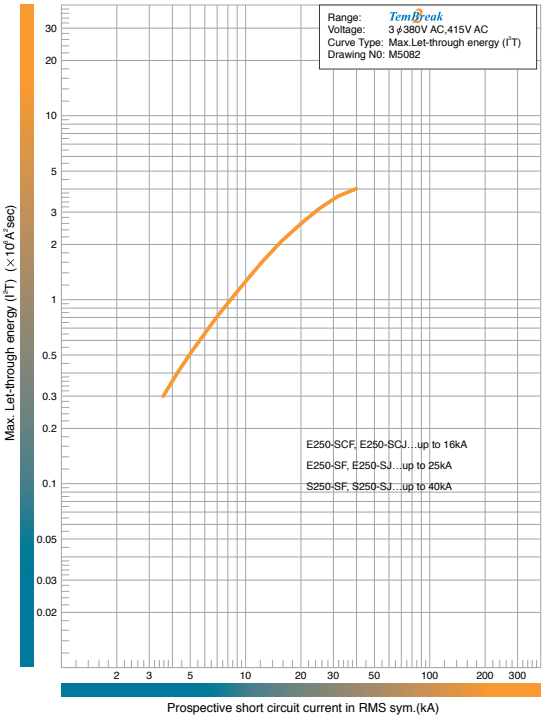

Let-Through Energy Characteristics

E250-SCF, E250-SF, S250-SF. 440 AC.

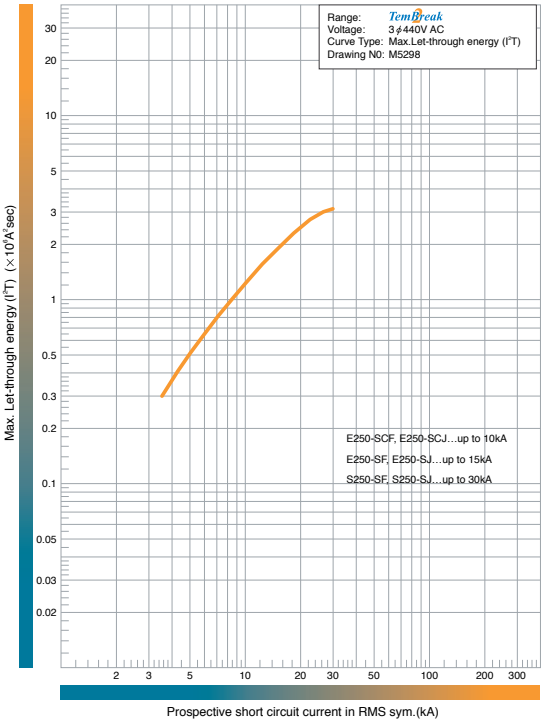

PROTECTION CHARACTERISTICS

TEMBREAK 2 LITE ADJUSTABLE PROTECTION

3 Pole 160A MCCB with Adjustable Characteristics

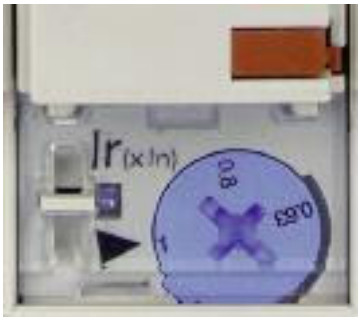

160A MCCB Adjustment Dial

The TemBreak 2 Lite range is available in 2 frame sizes, 160A and 250A. Interrupting capacities of 16kA, 25kA and 40kA are offered in 3 and 4 pole versions. MCCBs with adjustable thermal and magnetic protection characteristics offer bespoke solutions allowing the breaker settings to match the load and supply characteristics.

160A TemBreak 2 Lite MCCBs are extremely compact in size (W75 H130 D68) and offer space saving solutions for electrical power distribution where the installation size is critical. 160A TemBreak 2 Lite models have adjustable thermal and fixed magnetic settings. 250A TemBreak 2 Lite MCCBs have adjustable thermal and adjustable magnetic settings.

TEMBREAK 2 LITE ADJUSTABLE PROTECTION

Adjustment Dials

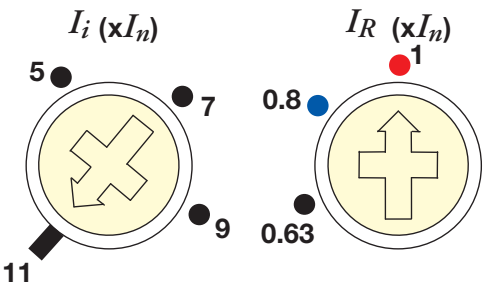

250A MCCB Adjusting Dials

1. I_R is the thermal element adjustment dial and is used to set the rated current to match the conductor rating.

   I_R can be set between 0.63 and 1.0 times I_n.

2. I_i is the magnetic element adjustment dial and is used to set the short circuit tripping threshold to suit the application. It is fixed on 160A frame.

Models, Ratings and Settings

Model	Type	Rated current I_n (A)	Magnetic trip current I_i (A)
E160	-SJ	25, 40	600
		63, 80	1000
		100, 125	1500
		160	1600
S160	-SCJ	25, 40	600
		63, 80	1000
		100, 125	1500
		160	1600
S160	-SJ	25, 40	600
		63, 80	1000
		100, 125	1500
		160	1600
E250	-SCJ	100, 125, 160, 200	*5 - 13 x In*
		250	*5 - 11 x In*
E250	-SJ	100, 125, 160, 200	*5 - 13 x In*
		250	*5 - 11 x In*
S250	-SJ	160, 200	*5 - 13 x In*
		250	*5 - 11 x In*

Magnetic trip tolerance +/-20%

PROTECTION CHARACTERISTICS

TEMBREAK 2 LITE ADJUSTABLE PROTECTION

Time/Current Characteristic Curves
E160-SJ, S160-SCJ, S160-SJ

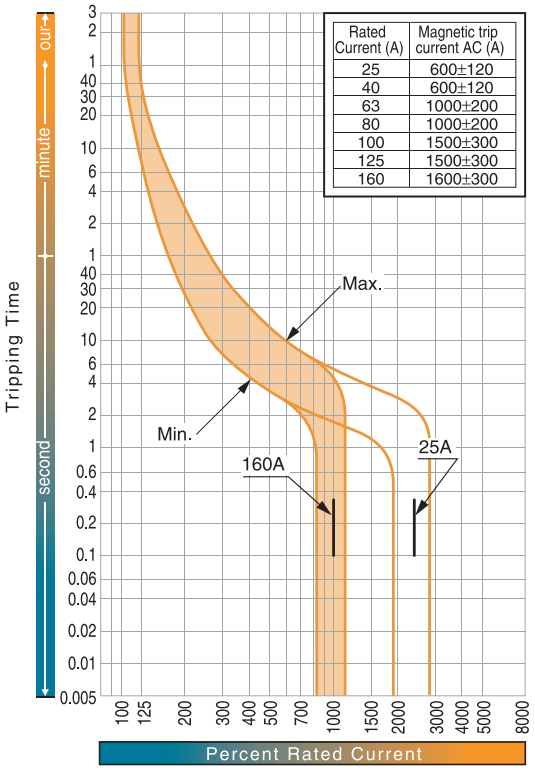

Rated Current (A)	Magnetic trip current AC (A)
25	600±120
40	600±120
63	1000±200
80	1000±200
100	1500±300
125	1500±300
160	1600±300

Time/Current Characteristic Curves
E250-SCJ, E250-SJ, S250-SJ (100 ~ 200A)

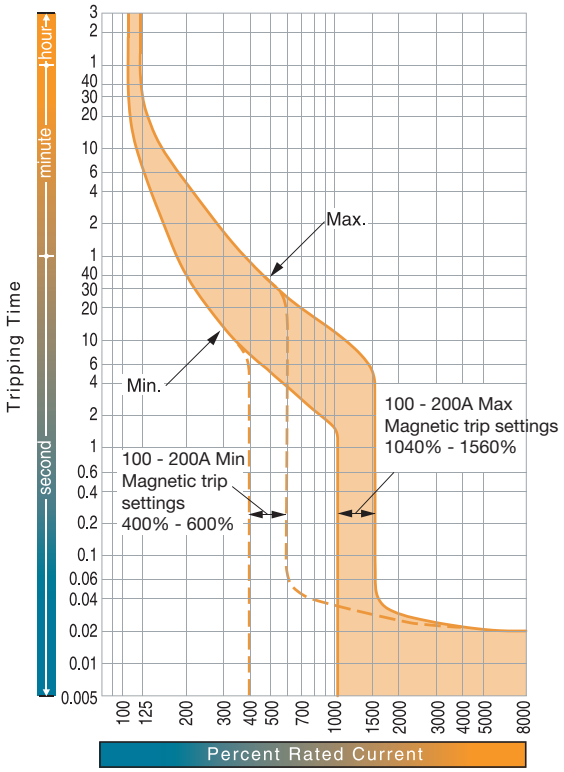

Time/Current Characteristic Curves
E250-SCJ, E250-SJ, S250-SJ (250A)

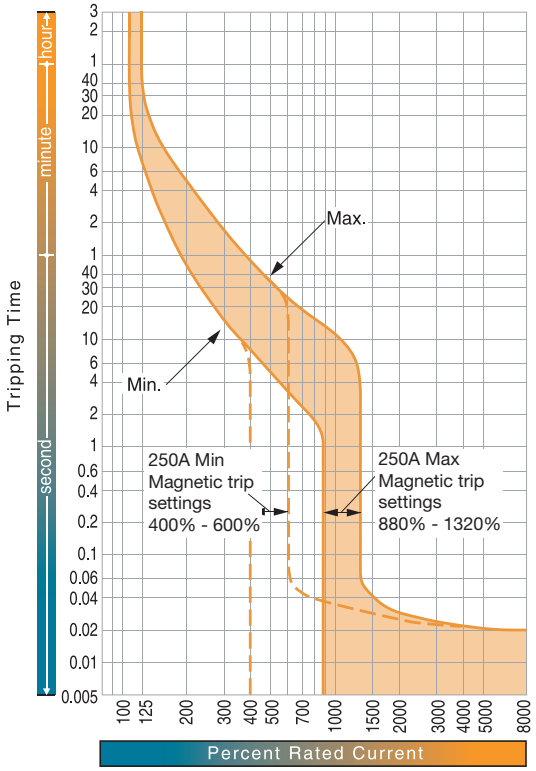

TEMBREAK 2 LITE ADJUSTABLE PROTECTION

Let-Through Peak Current Characteristics

E160-SJ, S160-SCJ, S160-SJ. 415V AC.

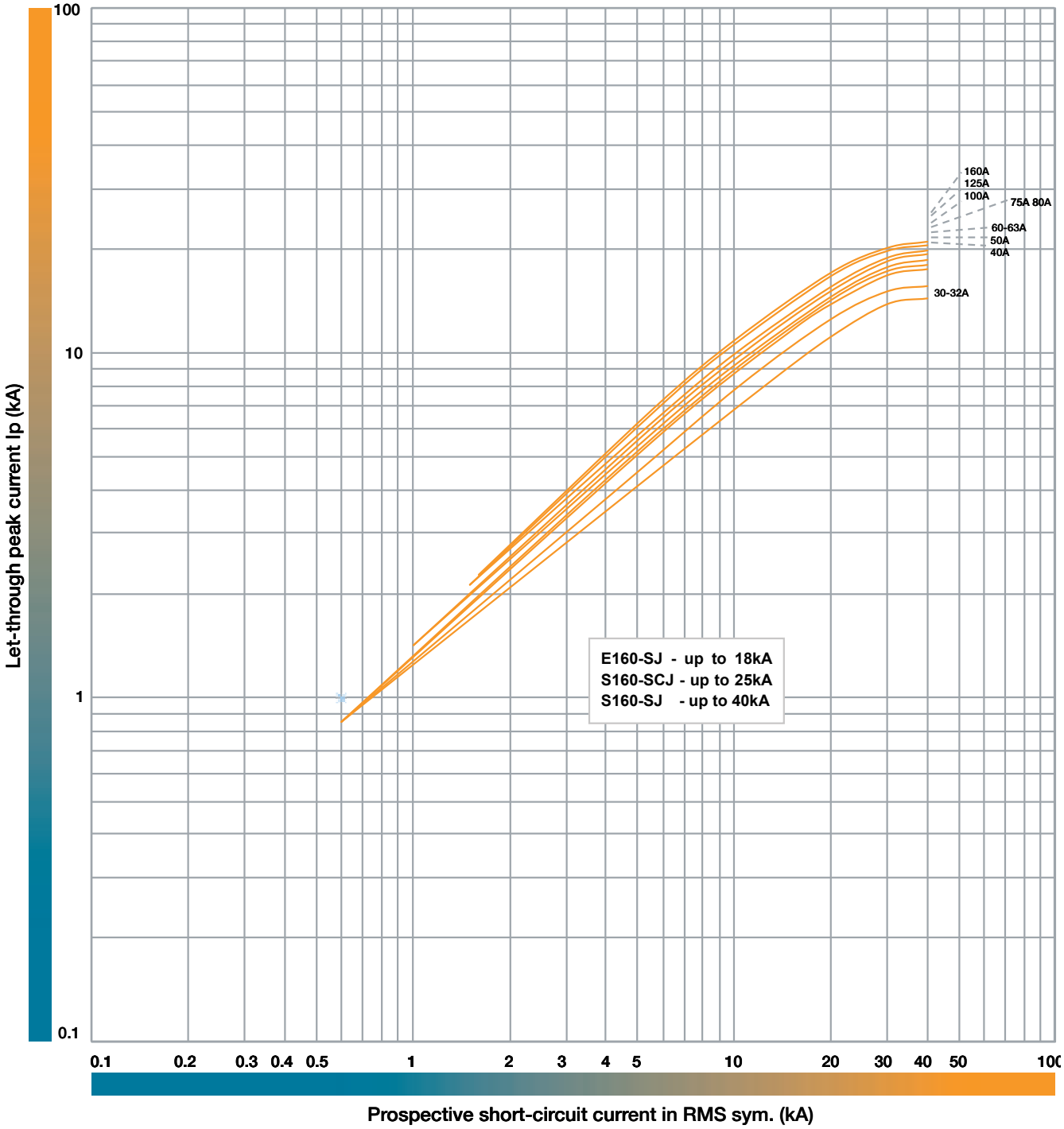

PROTECTION CHARACTERISTICS

TEMBREAK 2 LITE ADJUSTABLE PROTECTION

Max. Let-Through Peak Current Characteristics

E250-SCJ, E250-SJ, S250-SJ. 415V AC.

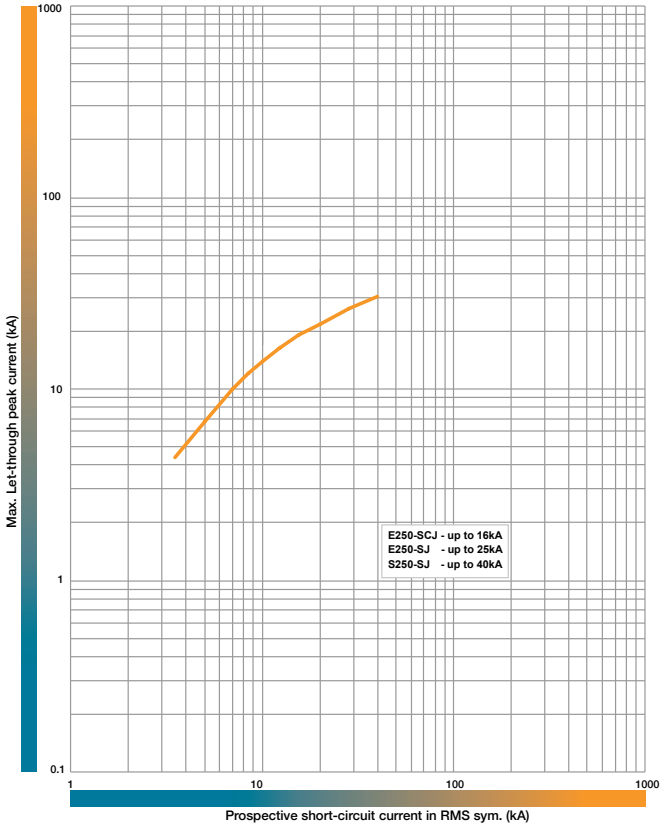

Max. Let-Through Peak Current Characteristics

S250-SJ. 440V AC.

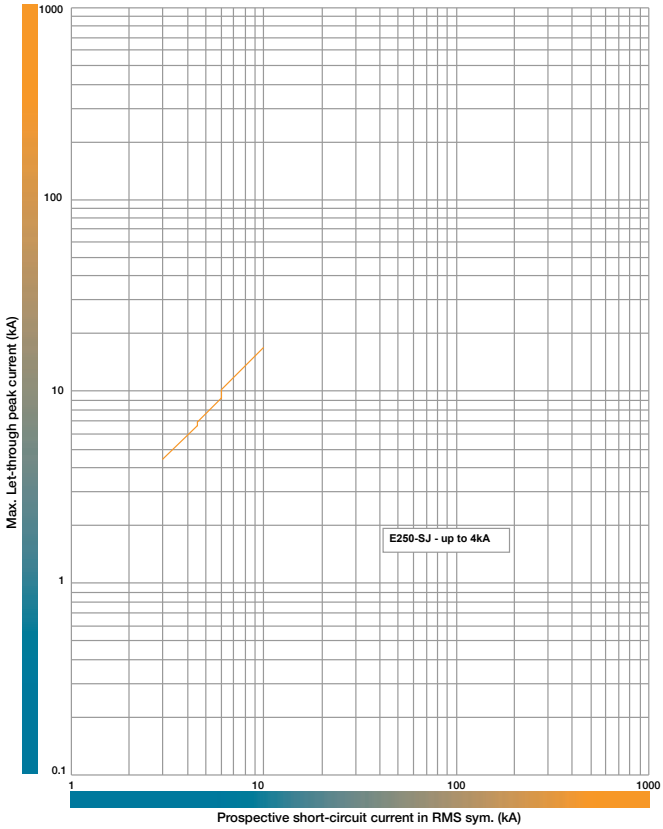

TEMBREAK 2 LITE ADJUSTABLE PROTECTION

Max Let-Through Energy Characteristics

E160-SJ, S160-SCJ, S160-SJ. 415V AC.

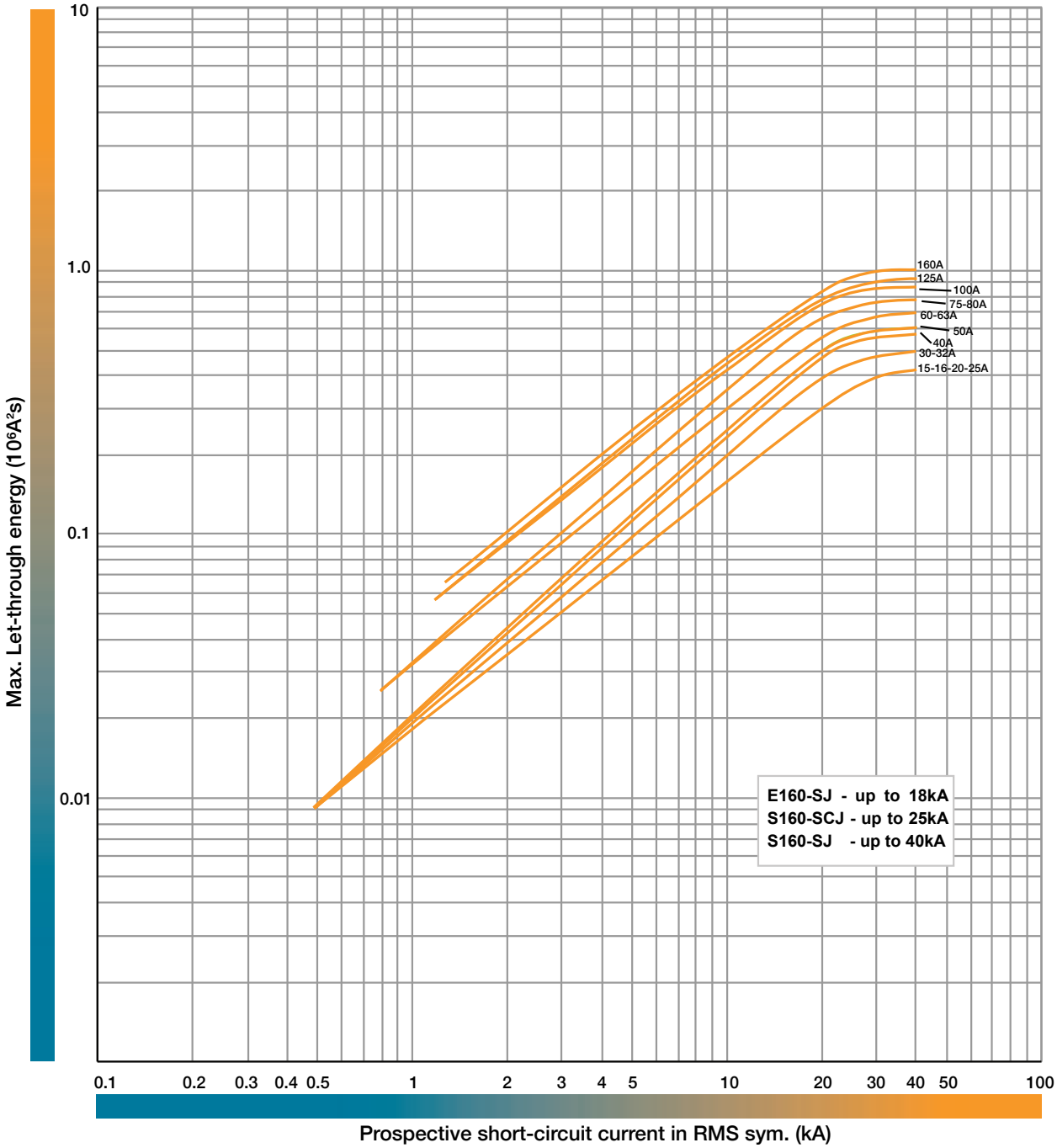

PROTECTION CHARACTERISTICS

TEMBREAK 2 LITE ADJUSTABLE PROTECTION

Max. Let-Through Energy Characteristics

E250-SCJ, E250-SJ, S250-SJ. 415V AC.

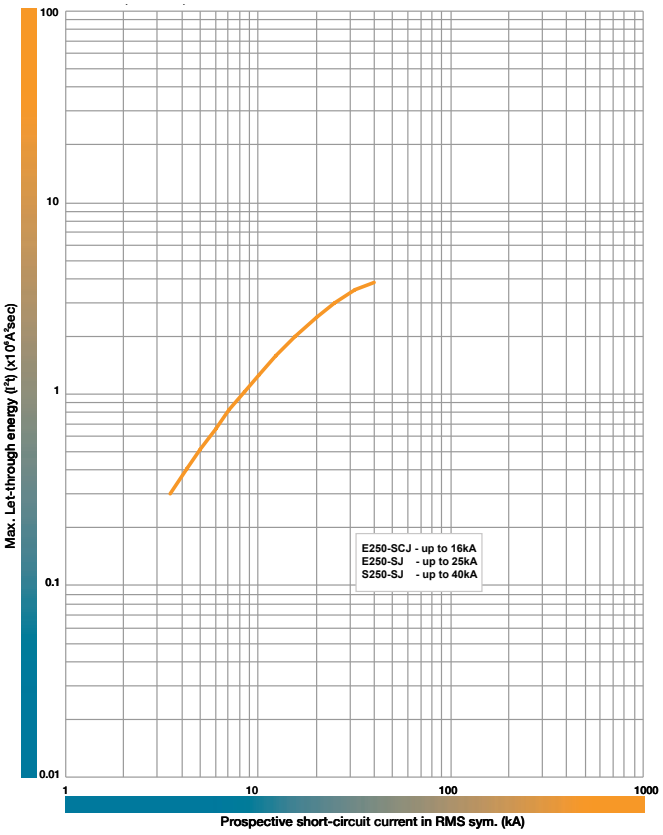

Max. Let-Through Energy Characteristics

S250-SJ. 440V AC.

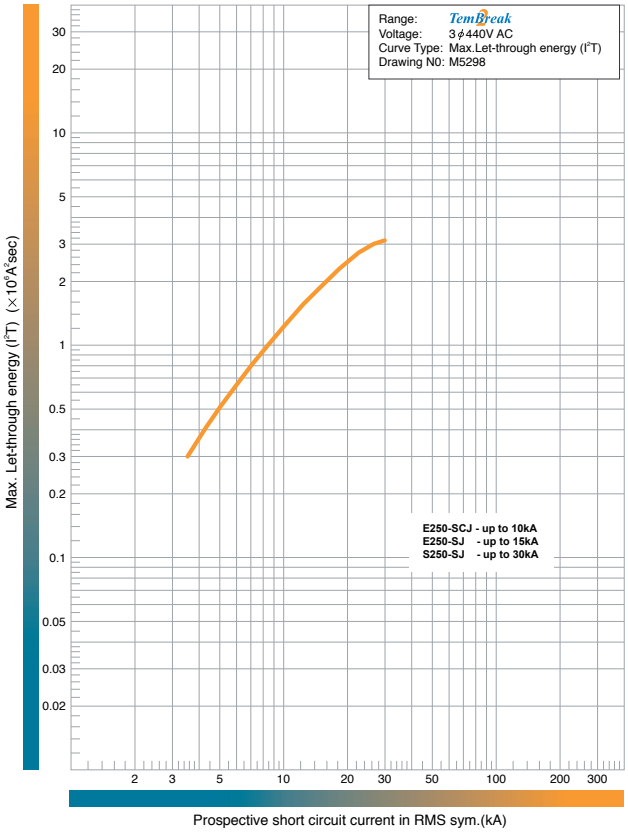

RESIDUAL (EARTH LEAKAGE) CURRENT PROTECTION

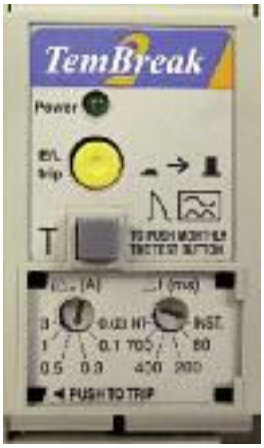

CBR Test Button, Trip Indicator, Power LED and Adjustment Dial

4 Pole CBR with Adjustable Settings

Circuit Breakers with Integral Residual Current Protection (CBRs) are the ultimate safeguards against the hazards of earth leakage.

The TemBreak 2 CBR range is available in 2 frame sizes, 125A and 250A. Interrupting capacities of 25kA, 36kA and 65kA are offered in 3 and 4 poles versions with adjustable thermal and fixed magnetic protection characteristics. CBR residual current protection settings are shown on the following page.

Residual Current Monitor and Pre Trip Module (Optional)

* Normally open alarm contact (2A, 250V AC) closes on detection of residual current. Alarm threshold is adjustable
* Green LED indicates voltage is present
* Red LED provides visual indications of residual current
* Can be configured to provide trip + alarm or alarm only
* Remote trip terminals allow tripping by pushbutton
* Can be configured to provide voltage drop protection

PROTECTION CHARACTERISTICS

RESIDUAL (EARTH LEAKAGE) CURRENT PROTECTION

Adjustment Dials

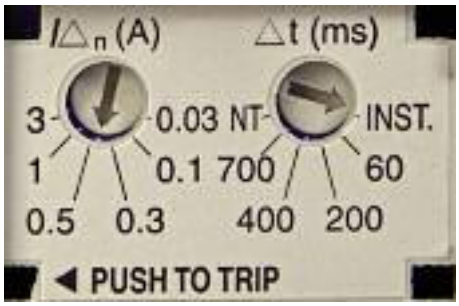

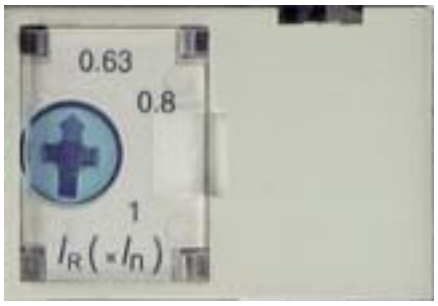

$I\Delta_n$ (A) is the adjustable tripping threshold for residual current (earth leakage) protection. It can be set between 30mA and 3A. Available settings are shown below:

Δt (ms) is a time delay which is introduced to the residual current (earth leakage) protection characteristic. Available settings are shown below. It can also be set to 0 (max. actual tripping time is 40ms) or NT (No Trip - tripping time = ∞). The maximum breaking time at each setting is shown in brackets. Note that if $I\Delta_t$ is set at 30mA, Δ_t defaults to 0.

I_R(A) is the adjustable tripping threshold for overload protection. It can be set between 0.63 and 1.0 times I_n. Available I_n ratings are shown below:

I_i is the tripping threshold for short-circuit protection. It is fixed at the values shown below:

Models, Ratings and Settings

Model	Type	IΔn (A)	Δt (ms)	Rated current In(A)	Magnetic trip current (A)
ZE125	-NJ	0.03, 0.1, 0.3, 0.5, 1, 3	0 (40), 60 (195), 200 (365), 400 (620) 700 (950), NT∞	20, 32, 50, 63, 100	12 x in
				125	10 x in
ZS125	-NJ	0.03, 0.1, 0.3, 0.5, 1, 3	0 (40), 60 (195), 200 (365), 400 (620) 700 (950), NT∞	20, 32, 50, 63, 100	12 x in
				125	10 x in
ZS125	-GJ	0.03, 0.1, 0.3, 0.5, 1, 3	0 (40), 60 (195), 200 (365), 400 (620) 700 (950), NT∞	20, 32, 50, 63, 100	12 x in
				125	10 x in
ZE250	-NJ	0.03, 0.1, 0.3, 0.5, 1, 3	0 (40), 60 (195), 200 (365), 400 (620) 700 (950), NT∞	160	13 x in
				250	10 x in
ZS250	-NJ	0.03, 0.1, 0.3, 0.5, 1, 3	0 (40), 60 (195), 200 (365), 400 (620) 700 (950), NT∞	160	13 x in
				250	10 x in
ZS250	-GJ	0.03, 0.1, 0.3, 0.5, 1, 3	0 (40), 60 (195), 200 (365), 400 (620) 700 (950), NT∞	160	13 x in
				250	10 x in

RESIDUAL (EARTH LEAKAGE) CURRENT PROTECTION

Time/Current Characteristic Curves

ZE125-NJ, ZS125-NJ, ZS125-GJ, ZE250-NJ, ZS250-NJ, ZS250-GJ

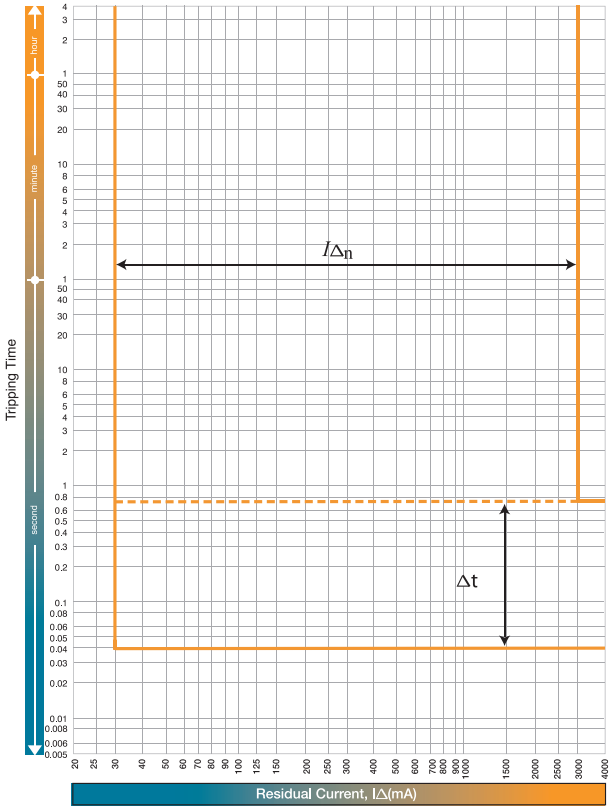

Time/Current Characteristic Curves

ZE125-NJ, ZS125-NJ, ZS125-GJ

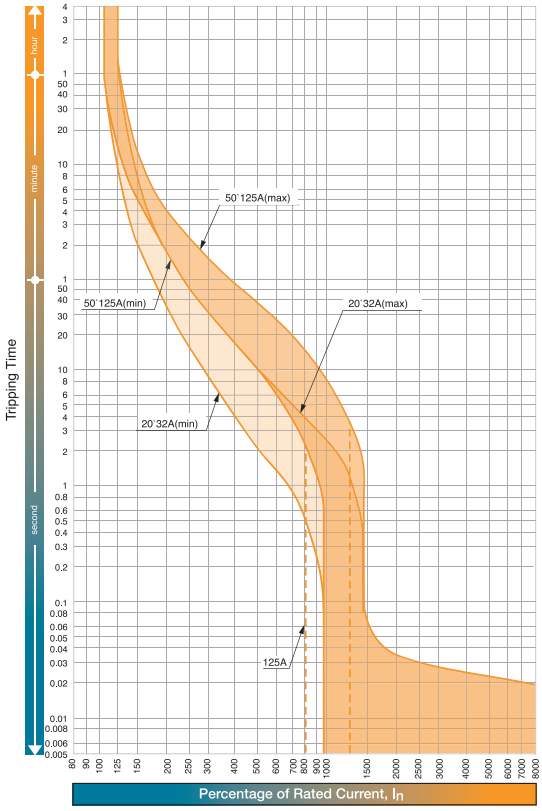

Time/Current Characteristic Curves

ZE250-NJ, ZS250NJ, ZS 250-GJ, 160A

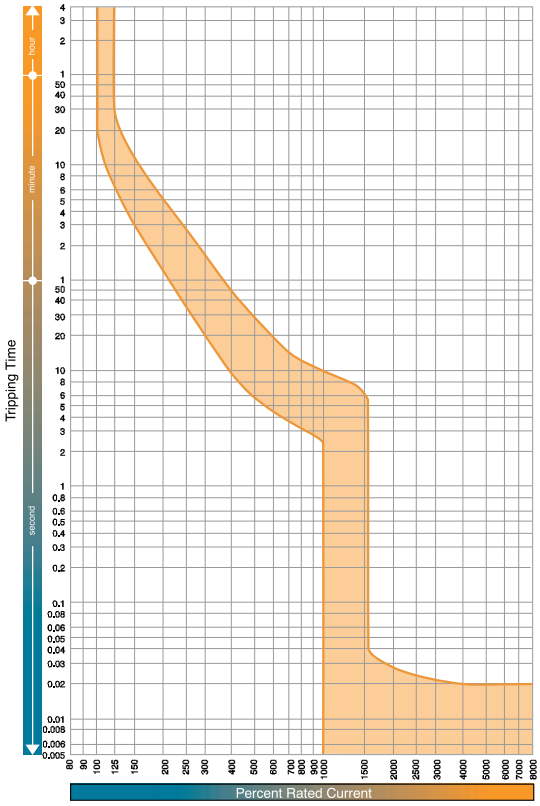

Time/Current Characteristic Curves

ZE250-NJ, ZS250NJ, ZS 250-GJ, 250A

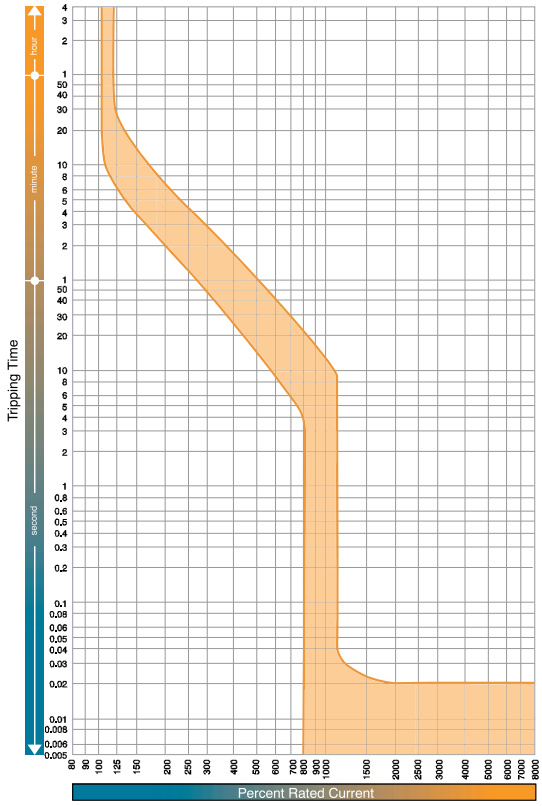

PROTECTION CHARACTERISTICS

DC PROTECTION

4 Pole 800A MCCB for use up to 1000V DC

Full Range of DC Specific MCCBs for Renewable or Critical Power Supply Applications.

The TemBreak 2 range of DC MCCB's offers a complete range of direct current protection and switching solutions. TemBreak 2 DC MCCBs can meet the demand for large photovoltaic (Solar Power) and UPS (Uninterruptable Power Supply) installations.

Tembreak 2 DC MCCBs can be used in switching applications of up to 1000V DC. Current ratings between 20A through 2500A are available in 11 frame sizes.

Models up to 1000A have adjustable overload settings and fixed instantaneous protection. MCCBs rated between 1250A and 2500A have adjustable instantaneous protection only.

Connection of Conductors to DC Circuit Breakers

It is more difficult to interrupt DC current than AC current because DC current does not have a zero point. Therefore for high DC voltages, 3 pole and 4 pole breakers are connected in series to ensure breaking performance, as illustrated below. It is important that insulation distances are maintained between the breaker and earthed metal parts to prevent electrical arcing faults.
Please refer to pages 184 - 190 for recommended distances.

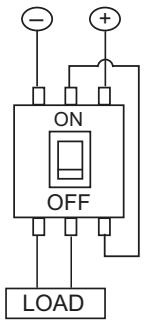

3P Poles Connected in Series

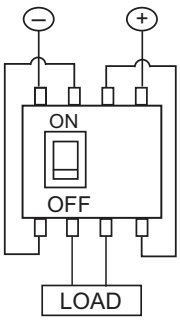

4P Poles Connected in Series

Non grounded system

DC PROTECTION

Adjustment Dials

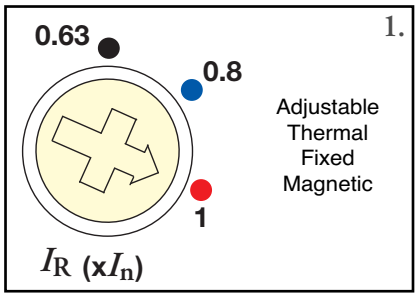

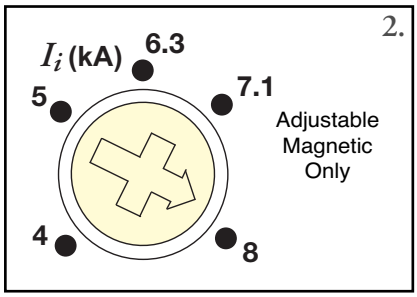

MCCBs up to 800A **MCCBs rated between 1250A and 2500A**

1. I_R is the thermal element adjustment dial and is used to set the rated current to match the conductor rating. I_R can be set between 0.63 and 1.0 times I_n.
2. I_i is the magnetic element adjustment dial and is used to set the short circuit tripping threshold to suit the application.

I_i can be set between 4000A and 8000A. Graduations are shown below.

Rated Current	Magnetic trip current (A)				
(A) Scale	8	7.1	6.3	5	4
(A)	8000	7100	6300	5000	4000

Models, Ratings and Settings

Model	Type	Rated current In(A)	Thermal Protection	3P	4P	Magnetic trip current (A)
S160	-SD	25, 32, 40	adjustable thermal	.	-	750 (+/- 20%)
		63, 80	adjustable thermal	.	-	1220 (+/- 20%)
		100, 125	adjustable thermal	.	-	1940 (+/- 20%)
		160	adjustable thermal	.	-	2070 (+/- 20%)
S160	-GD	25, 32, 40	adjustable thermal	.	-	750 (+/- 20%)
		63, 80	adjustable thermal	.	-	1220 (+/- 20%)
		100,125	adjustable thermal	.	-	1940 (+/- 20%)
		160	adjustable thermal	.	-	2070 (+/- 20%)
S250	-SD	100, 125, 160, 200	adjustable thermal	.	-	13 x In (+/- 20%)
		250	adjustable thermal	.	-	11 x In (+/- 20%)
S250	-GD	100, 125, 160, 200	adjustable thermal	.	-	13 x In (+/- 20%)
		250	adjustable thermal	.	-	11 x In (+/- 20%)
S400	-ND	250, 400	adjustable thermal	.	-	12 x In (+/- 20%)
PVS400	-NDH	250, 400	adjustable thermal	-	.	8 x In (+/- 20%)
PVS400	-NDL	250, 400	adjustable thermal	.	-	8 x In (+/- 20%)
PVS400	-NDL	250, 400	adjustable thermal	-	.	12 x In (+/- 20%)
S800	-ND	630, 800	adjustable thermal	.	-	10 x In (+/- 20%)
PVS800	-NDL	630, 800	adjustable thermal	-	.	3500 (+/- 20%)
PVS800	-NDH	630, 800	adjustable thermal	-	.	3500 (+/- 20%)
S1000	-ND	1000	fixed thermal	.	-	8000 (+/- 20%)
XS1250	ND	1250	instantaneous only	.	-	4000 - 8000 (+/- 25%)
XS1600	ND	1600	instantaneous only	.	-	4000 - 8000 (+/- 25%)
XS2000	ND	2000	instantaneous only	.	-	4000 - 8000 (+/- 25%)
XS2500	ND	2500	instantaneous only	.	-	4000 - 8000 (+/- 25%)

PROTECTION CHARACTERISTICS

DC PROTECTION

Time/Current Characteristic Curves
S160-SD, S160-GD

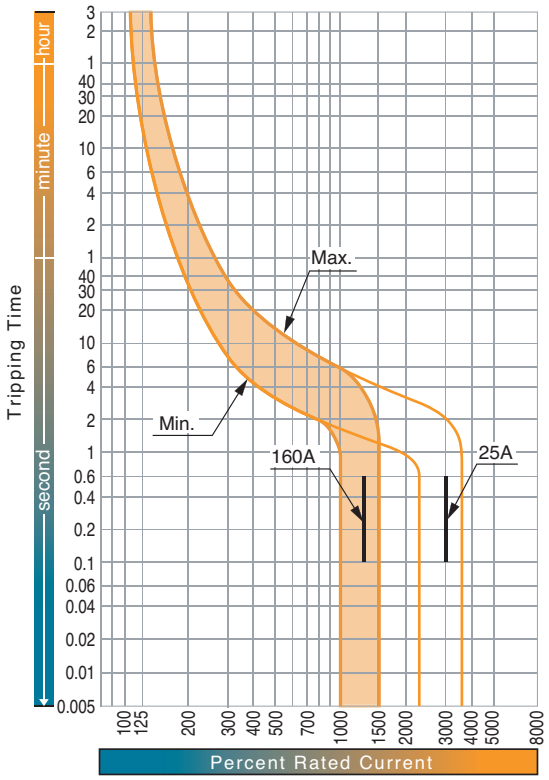

Time/Current Characteristic Curves
S250-SD, S250 GD (100-200A)

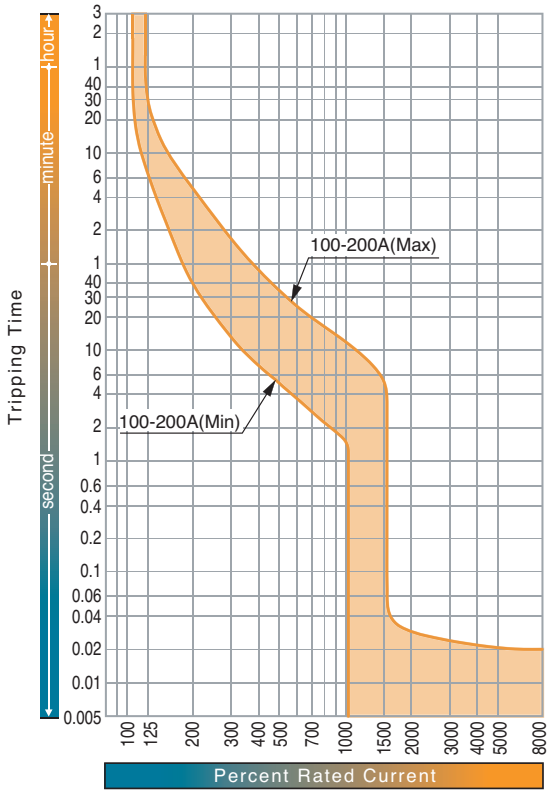

Time/Current Characteristic Curves
S250-SD, S250-GD, (250A)

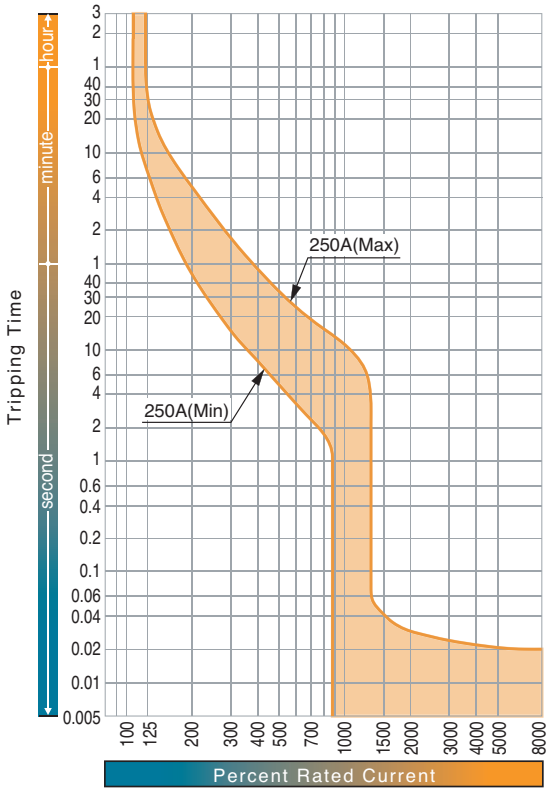

DC PROTECTION

Time/Current Characteristic Curves
S400-ND

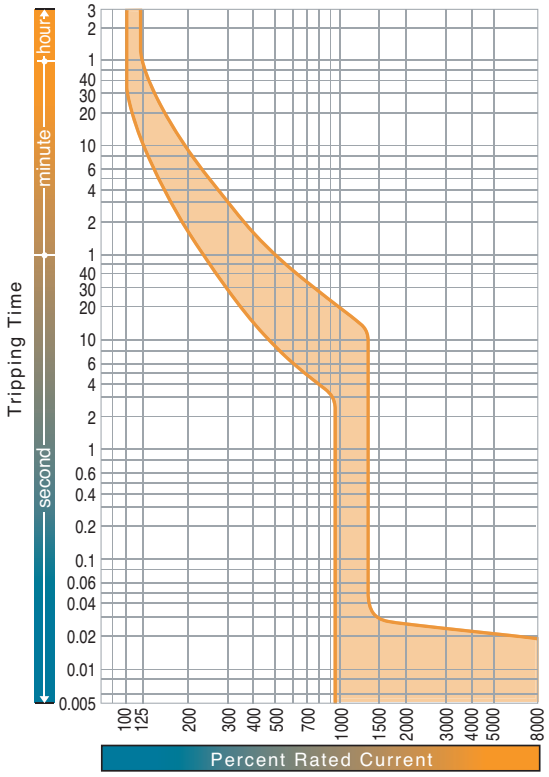

Time/Current Characteristic Curves
PVS400-NDL 4P

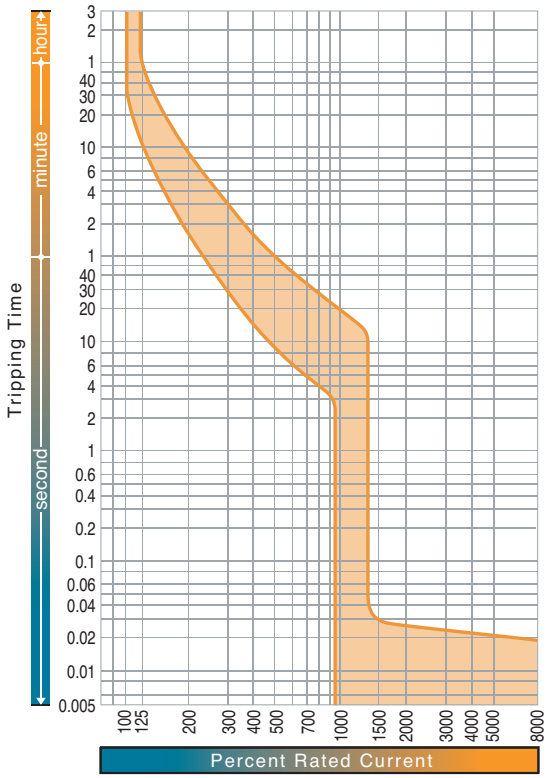

Time/Current Characteristic Curves
PVS400-NDH PVS400-NDL 3P

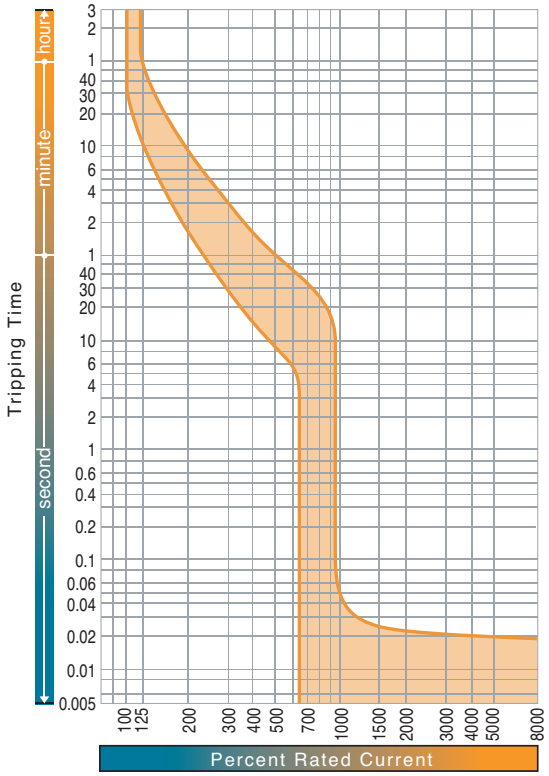

Time/Current Characteristic Curves
S800-ND

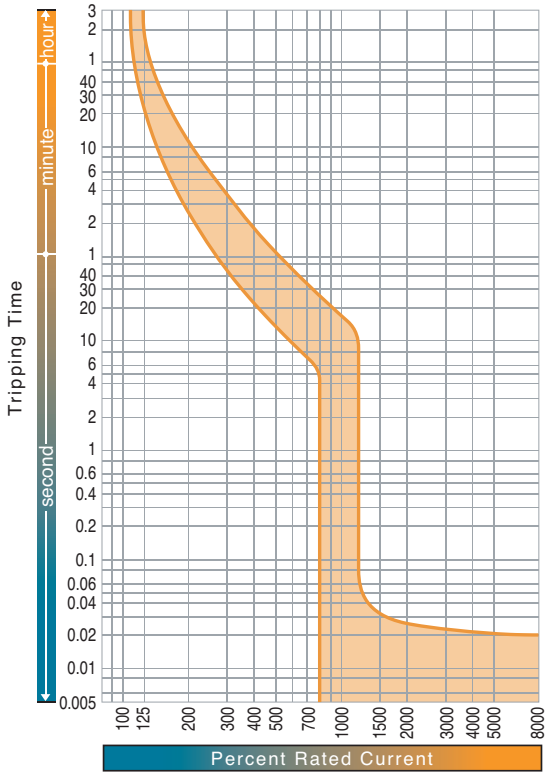

PROTECTION CHARACTERISTICS

DC PROTECTION

Time/Current Characteristic Curves
PVS800-NDL, PVS800-NDH (630A, 800A)

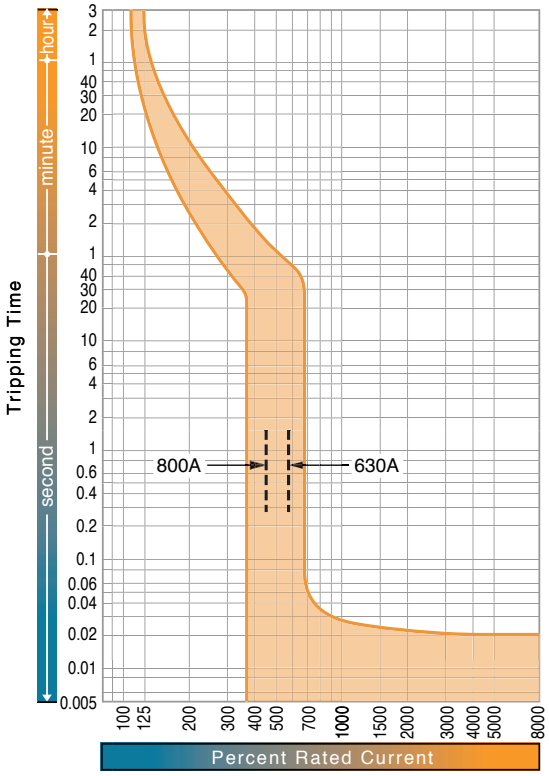

Time/Current Characteristic Curves
S1000-ND

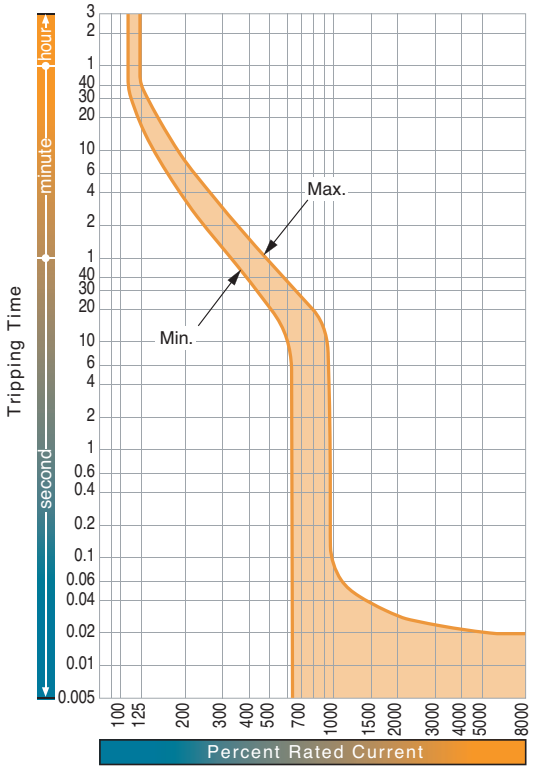

Time/Current Characteristic Curves
XS1250ND, XS1600ND, XS2000ND, XS2500ND

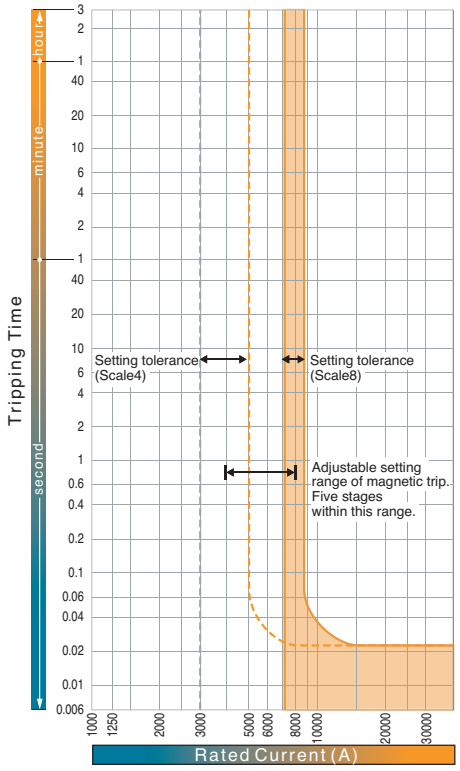

CONTENTS

TEMBREAK 2 & TEMBREAK

MCCBS FROM 12A TO 3200A • MCCBS FOR 1000V AC
MCCBS FOR 1000V DC • MCCBS WITH INTEGRAL RCD
SWITCH DISCONNECTORS • MEASUREMENT AND DATA COMMUNICATION

RATINGS AND SPECIFICATIONS	SECTION 1
PROTECTION CHARACTERISTICS	SECTION 2
APPLICATION DATA	SECTION 3
ACCESSORIES	SECTION 4
INSTALLATION	SECTION 5
DIMENSIONS	SECTION 6
ORDER CODES	SECTION 7

APPLICATION DATA

Frame Reference	TB2 Lite 160	TB2 Lite 250	TB2 S125	TB2 S250	TB2 S/H/L 250	TB2 H/L 400	TB2 E/S 630	
Max. In (A) of Frame	160	250	125	250	250	400	630	
TEMBREAK 2 MOULDED CASE CIRCUIT BREAKERS			S125-NJ S125-GJ	S160-NJ S160-GJ S250-NJ S250-GJ	H125-NJ L125-NJ H160-NJ L160-NJ H250-NJ L250-NJ S250-NE S250-GE S250-PE H250-NE	H400-NE L400-NE	E400-NJ S400-CJ S400-NJ S400-GJ S400-PJ S400-NE S400-GE S400-PE S630-CE E630-NE S630-GE	
TEMBREAK 2 CIRCUIT BREAKERS WITH Icu = 70KA AT 690V Ac					L125-PJ	L400-PE		
TEMBREAK 2 CIRCUIT BREAKERS FOR 1000V Ac			VS125-NJ	VS250-NJ			XV400NE①	
TEMBREAK 2 LITE SPACE SAVING, MONEY SAVING MOULDED CASE CIRCUIT BREAKERS	E160-SF S160-SCF S160-SF E160-SJ S160-SCJ S160-SJ	E250-SCF E250-SF S250-SF E250-SCJ E250-SJ S250-SJ						
TEMBREAK 2 CIRCUIT BREAKERS WITH INTEGRAL RESIDUAL CURRENT PROTECTION (CBR)			ZE125-NJ ZS125-NJ ZS125-GJ	ZE250-NJ ZS250-NJ ZS250-GJ				
CIRCUIT BREAKERS AND SWITCH-DISCONNECTORS FOR USE ABOVE 250V DC	S160-SD S160-GD S160-SDN	S250-SD S250-GD S250-SDN		PVS160-SDL PVS160-SDH PVS160-SNL PVS160-SNH PVS250-SDL PVS250-SDH PVS250-SNL PVS250-SNH		PVS400-NDL PVS400-NDH PVS400-NNL PVS400-NNH	S400-ND	
SWITCH DISCONNECTORS	S160-SN	S250-SN	S125-NN	S250-NN			S400-NN	

	TB2 H/L 800	TB2 1000	TB2 1250	TB2 1600	TB 3200	
	800	1000	1250	1600	3200	
	H800-NE L800-NE	S800-CJ S800-NJ S800-RJ S800-NE S800-RE S1000-SE S1000-NE	S1250-SE S1250-NE S1250-GE	S1600-NE S1600-SE	XS2000-NE① XS2500-NE① XS3200-NE①	DISCRIMINATION Pages 113 - 116 CASCADE Pages 117 - 120 MCCB PERFORMANCE AT HIGH ALTITUDE Pages 123- 124 MCCBs IN 400Hz SYSTEMS Pages 125- 127
	L800-PE					
		XV630PE① XV800PE①	XV1250NE①			
	PVS800-NDL PVS800-NDH PVS800-NNL PVS800-NNH	S800-ND S1000-ND	XS1250ND①	XS1600ND①	XS2000-ND① XS2500-ND① XS3200-ND①	MCCBs IN DC SYSTEMS Pages 121 - 122
		S800-NN	S1250-NN	S1600-NN	XS2000-NN① XS2500-NN①	

①Tembreak 1. Frame sizes vary from Tembreak2.

APPLICATION DATA

DISCRIMINATION

What is discrimination?

Discrimination, also called selectivity, is the co-ordination of protective devices such that a fault is cleared by the protective device installed immediately upstream of the fault, and by that device alone.

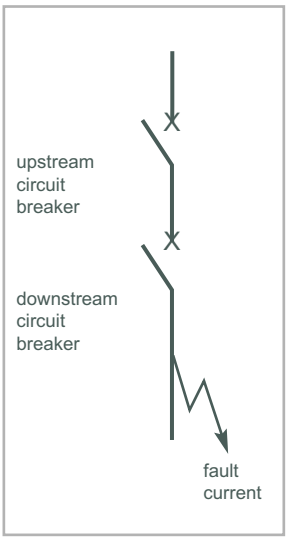

Total discrimination

Discrimination is said to be total if the downstream circuit breaker opens and the upstream circuit breaker remains closed. This ensures maximum availability of the system.

Partial discrimination

Discrimination is partial if the above condition is not fulfilled up to the prospective short-circuit current, but to a lesser value, termed the selectivity limit current (I_s).

Above this value both circuit breakers could open, resulting in loss of selectivity.

How to read the discrimination tables

Boxes containing the letter "T" indicate total discrimination between the relevant upstream and downstream circuit-breakers. Total discrimination applies for all fault levels up to the breaking capacity of the upstream or the downstream circuit breaker, whichever is the lesser.

For the other boxes, discrimination is either partial or there is no discrimination.

If discrimination is partial then the value of the selectivity limit current, I_s, is shown in the box.

DISCRIMINATION

Tempower 2 ACB, Tembreak 2 MCCB

Discrimination Tables According To IEC 60947-2, Annex A, At 400V AC

Upstream ACB

Downstream MCCB																			
Frame			800A	1250A		1600A			2000A			2500A		3200A		4000A	5000A	6300A	
	Model		AR208S	AR212S	AR212H	AR216S	AR216H	AR316H	AR220S	AR220H	AR320H	AR325S	AR325H	AR332S	AR332H	AR440SB	AR650S	AR663S	AR663H
		Breaking Capacity	65kA	65kA	80kA	65kA	80kA	100kA	65kA	80kA	100A	85kA	100kA	85kA	100kA	100kA	120kA	120kA	135kA
TB2 S125	S125NJ	36kA	T	T	T	T	T	T	T	T	T	T	T	T	T	T	T	T	T
	S125GJ	65kA	T	T	T	T	T	T	T	T	T	T	T	T	T	T	T	T	T
TB2 S250	S160NJ	36kA	T	T	T	T	T	T	T	T	T	T	T	T	T	T	T	T	T
	S160GJ	65kA	T	T	T	T	T	T	T	T	T	T	T	T	T	T	T	T	T
	S250NJ	36kA	T	T	T	T	T	T	T	T	T	T	T	T	T	T	T	T	T
	S250GJ	65kA	T	T	T	T	T	T	T	T	T	T	T	T	T	T	T	T	T
TB2 S/H/L 250	H125NJ	125kA	T	T	T	T	T	T	T	T	T	T	T	T	T	T	T	T	T
	L125NJ	200kA	T	T	T	T	T	T	T	T	T	T	T	T	T	T	T	T	T
	S250PE	70kA	T	T	T	T	T	T	T	T	T	T	T	T	T	T	T	T	T
	H250NJ	125kA	T	T	T	T	T	T	T	T	T	T	T	T	T	T	T	T	T
	L250NJ	200KA	T	T	T	T	T	T	T	T	T	T	T	T	T	T	T	T	T
TB2 E/S 630	E400NJ	25kA	T	T	T	T	T	T	T	T	T	T	T	T	T	T	T	T	T
	S400CJ	36kA	T	T	T	T	T	T	T	T	T	T	T	T	T	T	T	T	T
	S400NJ	50kA	T	T	T	T	T	T	T	T	T	T	T	T	T	T	T	T	T
	S400NE	50kA	T	T	T	T	T	T	T	T	T	T	T	T	T	T	T	T	T
	S400GJ	70kA	T	T	T	T	T	T	T	T	T	T	T	T	T	T	T	T	T
	S400GE	70kA	T	T	T	T	T	T	T	T	T	T	T	T	T	T	T	T	T
	S400PJ	85kA	T	T	T	T	T	T	T	T	T	T	T	T	T	T	T	T	T
	S400PE	85kA	T	T	T	T	T	T	T	T	T	T	T	T	T	T	T	T	T
	E630NE	36kA	T	T	T	T	T	T	T	T	T	T	T	T	T	T	T	T	T
	S630CE	50kA	T	T	T	T	T	T	T	T	T	T	T	T	T	T	T	T	T
	S630GE	70kA	T	T	T	T	T	T	T	T	T	T	T	T	T	T	T	T	T
TB2 H/L 400	H400NE	125kA	T	T	T	T	T	T	T	T	T	T	T	T	T	T	T	T	T
	L400NE	200KA	T	T	T	T	T	T	T	T	T	T	T	T	T	T	T	T	T
TB2 1000	S800-CJ	36kA	T	T	T	T	T	T	T	T	T	T	T	T	T	T	T	T	T
	S800-NJ	50kA	T	T	T	T	T	T	T	T	T	T	T	T	T	T	T	T	T
	S800-RJ	70kA	T	T	T	T	T	T	T	T	T	T	T	T	T	T	T	T	T
	S800-NE	50kA	T	T	T	T	T	T	T	T	T	T	T	T	T	T	T	T	T
	S800-RE	70kA	T	T	T	T	T	T	T	T	T	T	T	T	T	T	T	T	T
	S1000-SE	50kA	-	T	T	T	T	T	T	T	T	T	T	T	T	T	T	T	T
	S1000-NE	70kA	-	T	T	T	T	T	T	T	T	T	T	T	T	T	T	T	T
TB2 H/L 800	H800-NE	125kA	T	T	T	T	T	T	T	T	T	T	T	T	T	T	T	T	T
	L800-NE	200kA	T	T	T	T	T	T	T	T	T	T	T	T	T	T	T	T	T
TB2 1250	S1250-SE	50kA	-	T	T	T	T	T	T	T	T	T	T	T	T	T	T	T	T
	S1250-NE	70kA	-	T	T	T	T	T	T	T	T	T	T	T	T	T	T	T	T
	S1250-GE	100kA	-	T	T	T	T	T	T	T	T	T	T	T	T	T	T	T	T
TB2 1600	S1600-SE	50kA	-	-	-	T	T	T	T	T	T	T	T	T	T	T	T	T	T
	S1600-NE	100kA	-	-	-	T	T	T	T	T	T	T	T	T	T	T	T	T	T

Notes: 1. All ACB's have I_i set at NON, MCR ON.
2. Assuming ACB time settings are greater than MCCB.
3. External relay can be used - Contact Terasaki for further details.
4. T= total discrimination.

SECTION 3

APPLICATION DATA

DISCRIMINATION

Tembreak 2 MCCB, (Electronic),

Discrimination Tables According To IEC 60947-2, Annex A, At 400V AC

Upstream MCCB

Downstream MCCB																									
Frame			250A				400A					630A			800A				1000A		1250A			1600A	
	Model		S250-NE	S250-GE	S250-PE	H250-NE	S400-NE	S400-GE	S400-PE	H400-NE	L400-NE	E630-NE	S630-CE	S630-GE	S800-NE	S800-RE	H800-NE	L800-NE	S1000-SE	S1000-NE	S1250-SE	S1250-NE	S1250-GE	S1600-SE	S1600-NE
		Breaking Capacity	36 kA	65 kA	70 kA	125 kA	50 kA	70 kA	85 kA	125 kA	200 kA	36 kA	50 kA	70 kA	50 kA	70 kA	125 kA	200 kA	50 kA	70 kA	50 kA	70 kA	100 kA	50 kA	100 kA
TB2 S125	S125-NJ	36kA	T	T	T	T	T	T	T	T	T	T	T	T	T	T	T	T	T	T	T	T	T	T	T
	S125-GJ	65kA	T	T	T	T	T	T	T	T	T	T	T	T	T	50	T	T	T	T	T	T	T	T	T
TB2 S250	S160-NJ	36kA	-	-	-	-	T	T	T	T	T	T	T	T	T	T	T	T	T	T	T	T	T	T	T
	S160-GJ	65kA	-	-	-	-	T	T	T	T	T	T	T	T	36	36	T	T	T	50	T	T	T	T	T
	S250-NJ	36kA	-	-	-	-	T	T	T	T	T	T	T	T	T	T	T	T	T	T	T	T	T	T	T
	S250-GJ	65kA	-	-	-	-	T	T	T	T	T	T	T	T	36	36	T	T	T	50	T	T	T	T	T
TB2 S/H/L 250	H125-NJ	125kA	T	T	T	T	T	T	T	T	T	T	T	T	T	50	T	T	T	T	T	T	70	T	85
	H160-NJ	125kA	-	-	-	-	-	-	-	T	T	T	T	T	T	50	T	T	T	T	T	T	70	T	85
	S250-NE	36kA	-	-	-	-	-	-	-	T	T	T	T	T	T	T	T	T	T	T	T	T	T	T	T
	S250-GE	65kA	-	-	-	-	-	-	-	T	T	T	T	T	36	36	T	T	T	50	T	T	T	T	T
	H250-NJ	125kA	-	-	-	-	-	-	-	T	T	T	T	T	T	50	T	T	T	T	T	T	70	T	85
	S250-PE	70kA	-	-	-	-	-	-	-	T	T	T	T	T	36	36	T	T	T	50	T	T	70	T	T
	H250-NE	125kA	-	-	-	-	-	-	-	T	T	T	T	T	36	36	T	T	T	50	T	T	70	T	85
TB2 E/S 630	E400-NJ	25kA	-	-	-	-	-	-	-	-	-	10	10	10	T	T	T	T	T	T	T	T	T	T	T
	S400-CJ	36kA	-	-	-	-	-	-	-	-	-	10	10	10	25	25	25	25	30	30	T	T	T	T	T
	S400-NJ	50kA	-	-	-	-	-	-	-	-	-	10	10	10	25	25	25	25	30	30	36	36	36	T	T
	S400-NE	50kA	-	-	-	-	-	-	-	-	-	10	10	10	25	25	25	25	30	30	36	36	36	T	T
	S400-GJ	70kA	-	-	-	-	-	-	-	-	-	10	10	10	25	25	25	25	30	30	36	36	36	T	50
	S400-GE	70kA	-	-	-	-	-	-	-	-	-	10	10	10	25	25	25	25	30	30	36	36	36	T	50
	S400-PJ	85kA	-	-	-	-	-	-	-	-	-	10	10	10	25	25	25	25	30	30	36	36	36	T	50
	S400-PE	85kA	-	-	-	-	-	-	-	-	-	10	10	10	25	25	25	25	30	30	36	36	36	T	50
	E630-NE	36kA	-	-	-	-	-	-	-	-	-	-	-	-	-	-	-	-	-	-	T	T	T	T	T
	S630-CE	50kA	-	-	-	-	-	-	-	-	-	-	-	-	-	-	-	-	-	-	36	36	36	T	T
	S630-GE	70kA	-	-	-	-	-	-	-	-	-	-	-	-	-	-	-	-	-	-	36	36	36	T	50
TB2 H/L 400	H400-NE	125kA	-	-	-	-	-	-	-	-	-	10	10	10	36	36	25	25	T	50	T	T	70	T	50
TB2 1000	S800-CJ	36kA	-	-	-	-	-	-	-	-	-	-	-	-	-	-	-	-	-	-	-	-	-	20	20
	S800-NJ	50kA	-	-	-	-	-	-	-	-	-	-	-	-	-	-	-	-	-	-	-	-	-	20	20
	S800-RJ	70kA	-	-	-	-	-	-	-	-	-	-	-	-	-	-	-	-	-	-	-	-	-	20	20
	S800-NE	50kA	-	-	-	-	-	-	-	-	-	-	-	-	-	-	-	-	-	-	-	-	-	20	20
	S800-RE	70kA	-	-	-	-	-	-	-	-	-	-	-	-	-	-	-	-	-	-	-	-	-	20	20

Notes: 1. All pick-up current and time delay settings are to be set at maximum for upstream MCCBs.
2. Is expressed in kA.
3. T= Total Selectivity

DISCRIMINATION

Tembreak 2 MCCB, TD3 MCB

Discrimination Tables According To IEC 60947-2, Annex A, At 400V AC

Downstream MCB Type: TD3 M06, TD3 M10 MCBs Type B, C & D	Upstream MCCB Type																
	S125-GJ (65kA) S125-NJ (36kA)						S160-GJ (65kA) S160-NJ (36kA)							S250-GJ (65kA) S250-NJ (36kA)		S400-PJ (85kA) S400-GJ (70kA) S400-NJ (50kA) S400-CJ (36kA) E400-NJ (25kA)	
in	20A	32A	50A	63A	100A	125A	20A	32A	50A	63A	100A	125A	160A	200A	250A	250A	400A
6A	260	T	T	T	T	T	260	T	T	T	T	T	T	T	T	T	T
10A	260	420	T	T	T	T	260	420	T	T	T	T	T	T	T	T	T
16A	260	420	650	T	T	T	260	420	650	T	T	T	T	T	T	T	T
20A	260	420	650	T	T	T	260	420	650	1000	T	T	T	T	T	T	T
25A	260	420	650	1000	T	T	260	420	650	1000	T	T	T	T	T	T	T
32A	260	420	650	1000	1500	T	260	420	650	1000	1500	T	T	T	T	T	T
40A	260	420	650	1000	1500	2000	260	420	650	1000	1500	2000	T	T	T	T	T
50A	260	420	650	1000	1500	2000	260	420	650	1000	1500	2000	3000	T	T	T	T
63A	260	420	650	1000	1500	2000	260	420	650	1000	1500	2000	3000	2600	T	T	T

Notes: 1. This rating is not available for S160-GJ.
2. Is is expressed in A.
3. T = Total selectivity.

Tembreak 2 Lite MCCB, TD3 MCB

Discrimination Tables According To IEC 60947-2, Annex A, At 400V AC

Downstream MCB Type: TD3 M06, TD3 M10 MCBs Type B, C & D	Upstream MCCB Type											
	S160-SJ (40kA) S160-SCJ (25kA) E160-SJ (16kA)							S250-SJ (40kA) E250-SJ (25kA) E250-SCJ (16kA)				
in	25A	40A	63A	80A	100A	125A	160A	100A	125A	160A	200A	250A
6A	1000	1000	3000	3000	5000	5000	6000	T	T	T	T	T
10A	1000	1000	2000	2000	4000	4000	5000	T	T	T	T	T
16A	600	600	2000	2000	3000	3000	4000	T	T	T	T	T
20A	600	600	2000	2000	3000	3000	4000	T	T	T	T	T
25A	-	600	1500	1500	2500	2500	3000	T	T	T	T	T
32A	-	600	1500	1500	2500	2500	3000	9000	T	T	T	T
40A	-	-	1500	1500	2500	2500	3000	8000	9000	T	T	T
50A	-	-	1500	1500	2500	2500	3000	7000	8000	9000	T	T
63A	-	-	-	1500	2500	2500	3000	6000	7000	8000	9000	T

Notes: 1. Is is expressed in A.
2. T = Total selectivity.

APPLICATION DATA

CASCADE

What is Cascading

Cascading is a technique where the current limiting capability of upstream circuit breakers is used to permit the installation of lower rated and therefore lower cost circuit breakers downstream.

The upstream TemBreak 2 circuit breaker acts as a resistance against short-circuit currents. With this assistance, downstream circuit breakers with breaking capacities lower than the prospective short-circuit at their point of installation can interrupt the reduced short-circuit current.

Since the current is limited downstream of the limiting circuit breaker, cascading applies to all switchgear in the downstream circuit. It is not restricted to two consecutive devices.

Cascading is recognised by the following standards related to electrical installations:

IEC 60364

BS 7671

AS/NZS 3000

The Advantages

Installation of a single limiting circuit-breaker results in considerable simplifications and savings for the entire downstream installation:

- Simplification of selection of devices using the cascading tables
- Savings on downstream devices. Cascading allows circuit-breakers with lower ratings to be used.

In addition the application of cascading will reduce both electrodynamic and thermal stress within the installation.

How to Read the Cascade Tables

The value shown in the table is the increased breaking capacity, expressed in kA, that can be achieved if the downstream MCCB is backed up by the appropriate upstream MCCB.

CASCADE

Tembreak 2 MCCB

Cascade Tables According to IEC 60947-2. Annex A, At 400V AC

Downstream MCCB	Upstream MCCB													
	Model		S125NJ	S125GJ	H125NJ	L125NJ	S160NJ	S160GJ	H160NJ	L160NJ	S250NJ	S250GJ	S250PE	H250NJ H250NE	L250NJ
		Breaking Capacity	36kA	65kA	125kA	200kA	36kA	65kA	125kA	200kA	36kA	65kA	70kA	125kA	200kA
	S125NJ	36kA	-	65	85	125	-	65	85	125	-	65	65	85	125
	S125GJ	65kA	-	-	125	150	-	-	125	150	-	-	70	125	150
	H125NJ	125kA	-	-	-	200	-	-	-	200	-	-	-	-	200
	S160NJ	36kA	-	-	-	-	-	65	85	125	-	65	65	85	125
	S160GJ	65kA	-	-	-	-	-	-	125	150	-	-	70	125	150
	H160NJ	125kA	-	-	-	-	-	-	-	200	-	-	-	-	200
	S250NJ	36kA	-	-	-	-	-	-	-	-	-	65	65	85	125
	S250GJ	65kA	-	-	-	-	-	-	-	-	-	-	70	125	150
	S250PE	70kA	-	-	-	-	-	-	-	-	-	-	-	125	150
	H250NJ	125kA	-	-	-	-	-	-	-	-	-	-	-	-	200

Notes: 1. Cascade fault level limit is expressed in kA.

Downstream MCCB	Upstream MCCB																					
			S400CJ	S400NJ S400NE	S400GJ S400GE	S400PJ S400PE	H400NE	L400NE	E630NE	S630CE	S630GE	S800CJ	S800NJ S800NE	S800RJ S800RE	H800NE	L800NE	S1000SE	S1000NE	S1250SE	S1250NE	S1250GE	S1600SE	S1600NE
		Breaking Capacity	36kA	50kA	70kA	85kA	125kA	200kA	36kA	50kA	70kA	36kA	50kA	70kA	125kA	200kA	50kA	70kA	50kA	70kA	85kA	50kA	85kA
	S125NJ	36kA	-	50	65	65	85	125	-	50	65	-	50	50	-	-	-	-	-	-	-	-	-
	S125GJ	65kA	-	-	70	85	125	150	-	-	70	-	-	70	-	-	-	-	-	-	-	-	-
	H125NJ	125kA	-	-	-	-	-	200	-	-	-	-	-	-	-	-	-	-	-	-	-	-	-
	S160NJ	36kA	-	50	65	65	85	125	-	50	65	-	50	70	50	50	50	70	-	-	-	-	-
	S160GJ	65kA	-	-	70	85	125	150	-	-	70	-	-	70	70	70	-	70	-	-	-	-	-
	H160NJ	125kA	-	-	-	-	-	200	-	-	-	-	-	-	-	-	-	-	-	-	-	-	-
	S250NJ	36kA	-	50	65	65	85	125	-	50	65	-	50	70	50	50	50	70	-	-	-	-	-
	S250GJ	65kA	-	-	70	85	125	150	-	-	70	-	-	70	70	70	-	70	-	-	-	-	-
	S250PE	70kA	-	-	-	-	125	150	-	-	-	-	-	-	85	85	-	-	-	-	-	-	-
	H250NJ	125kA	-	-	-	-	-	200	-	-	-	-	-	-	-	150	-	-	-	-	-	-	-
	E400NJ	25kA	36	36	50	50	65	85	36	36	50	30	36	50	36	36	36	36	36	36	36	36	36
	S400CJ	36kA	-	50	65	65	70	100	-	50	65	-	50	70	50	50	50	50	50	50	50	50	50
	S400NJ	50kA	-	-	70	70	85	125	-	-	70	-	-	70	70	70	-	70	-	70	70	-	70
	S400GJ	70kA	-	-	-	85	125	150	-	-	-	-	-	-	85	85	-	-	-	-	-	-	85
	S400PJ	85kA	-	-	-	-	125	150	-	-	-	-	-	-	-	-	-	-	-	-	-	-	-

Notes: 1. Cascade fault level limit is expressed in kA.

APPLICATION DATA

CASCADE

Tembreak 2 MCCB, TD3 MCB

Cascade Tables According To IEC 60947-2, Annex A, At 400V AC

Downstream MCB			Upstream MCCB					
	Model		S125NJ (36kA)	S125GJ (65kA)	S160NJ (36kA)	S160GJ (65kA)	S250NJ (36kA)	S250GJ (65kA)
		In	125A	125A	160A	160A	250A	250A
	TD3 M06 (6kA)	6A	14	14	12	12	12	12
		10A	14	14	12	12	12	12
		16A	14	14	12	12	12	12
		20A	14	14	12	12	12	12
		25A	14	14	12	12	12	12
		32A	14	14	12	12	12	12
		40A	12	12	10	10	10	10
		50A	12	12	10	10	10	10
		63A	12	12	10	10	10	10

Notes: 1. Cascade fault level limit is expressed in kA.

Downstream MCB			Upstream MCCB					
	Model		S125NJ (36kA)	S125GJ (65kA)	S160NJ (36kA)	S160GJ (65kA)	S250NJ (36kA)	S250GJ (65kA)
		In	125A	125A	160A	160A	250A	250A
	TD3 M10 (10kA)	6A	30	30	25	25	25	25
		10A	30	30	25	25	25	25
		16A	30	30	25	25	25	25
		20A	30	30	25	25	25	25
		25A	30	30	25	25	25	25
		32A	30	30	25	25	25	25
		40A	30	30	23	23	23	23
		50A	30	30	23	23	23	23
		63A	30	30	23	23	23	23

Notes: 1. Cascade fault level limit is expressed in kA.

CASCADE

Tembreak 2 Lite MCCB, TD3 MCB

Cascade Tables According To IEC 60947-2, Annex A, At 400V AC

Downstream MCB Type		Upstream MCCB Type													
		S160-SCJ (25kA)							S160-SJ (40kA)						
	in	25A	40A	63A	80A	100A	125A	160A	25A	40A	63A	80A	100A	125A	160A
TD3 M06 MCBs (6kA) Type B, C & D	6A	14	14	14	14	14	14	14	14	14	14	14	14	14	14
	10A	14	14	14	14	14	14	14	14	14	14	14	14	14	14
	16A	14	14	14	14	14	14	14	14	14	14	14	14	14	14
	20A	14	14	14	14	14	14	14	14	14	14	14	14	14	14
	25A	-	14	14	14	14	14	14	-	14	14	14	14	14	14
	32A	-	14	14	14	14	14	14	-	14	14	14	14	14	14
	40A	-	-	14	14	14	14	14	-	-	14	14	14	14	14
	50A	-	-	14	14	14	14	14	-	-	14	14	14	14	14
	63A	-	-	-	14	14	14	14	-	-	-	14	14	14	14
TD3 M10 MCBs (10kA) Type B, C & D	6A	25	25	25	25	20	20	20	40	40	40	40	30	30	25
	10A	25	25	25	25	20	20	20	40	40	40	40	30	30	25
	16A	25	25	25	25	20	20	20	40	40	40	40	30	30	25
	20A	25	25	25	25	20	20	20	40	40	40	40	30	30	25
	25A	-	25	25	25	20	20	20	-	40	40	40	30	30	25
	32A	-	25	25	25	20	20	20	-	40	40	40	30	30	25
	40A	-	-	25	25	20	20	20	-	-	40	40	30	30	25
	50A	-	-	25	25	20	20	20	-	-	40	40	30	30	25
	63A	-	-	-	25	20	20	20	-	-	-	40	30	30	25

Notes: 1. Cascade fault level limit is expressed in kA.

Downstream MCB		Upstream MCCB Type									
		E250-SJ (25kA)					S250-SJ (40kA)				
	in	100A	125A	160A	200A	250A	100A	125A	160A	200A	250A
TD3 M06 MCBs (6kA) Type B, C & D	6A	10	10	10	10	10	12	12	12	12	12
	10A	10	10	10	10	10	12	12	12	12	12
	16A	10	10	10	10	10	12	12	12	12	12
	20A	10	10	10	10	10	12	12	12	12	12
	25A	10	10	10	10	10	12	12	12	12	12
	32A	10	10	10	10	10	12	12	12	12	12
	40A	5	5	5	5	5	10	10	10	10	10
	50A	5	5	5	5	5	10	10	10	10	10
	63A	5	5	5	5	5	10	10	10	10	10
TD3 M10 MCBs (10kA) Type B, C & D	6A	20	20	20	20	20	25	25	25	25	25
	10A	20	20	20	20	20	25	25	25	25	25
	16A	20	20	20	20	20	25	25	25	25	25
	20A	20	20	20	20	20	25	25	25	25	25
	25A	20	20	20	20	20	25	25	25	25	25
	32A	20	20	20	20	20	25	25	25	25	25
	40A	20	20	20	20	20	25	25	25	25	25
	50A	20	20	20	20	20	25	25	25	25	25
	63A	20	20	20	20	20	25	25	25	25	25

Notes: 1. Cascade fault level limit is expressed in kA.

APPLICATION DATA

MCCBs IN DC SYSTEMS

Terasaki's MCCBs provide an excellent range of protection for DC installations. We offer MCCBs of up to 1000A with DC overload protection and up to 2500A with DC short-circuit protection.

Protection Method

Current transformers require alternating current to generate magnetic flux thereby inducing current to flow in the secondary winding. Any device which relies on current transformers for measurement or detection of current is therefore unsuitable for protection of DC systems. Most electronic MCCBs fall into this category.

The most common method of detecting DC overloads is by the use of a thermal element. Short-circuit protection in DC circuits is provided by electromagnetic tripping elements.

Tripping Characteristics

The time-current characteristics of a thermal element, such as those published in Section 3, are unaffected by the frequency of current applied. They hold good for both AC and DC currents.

A magnetic element operates on the instantaneous value of the current waveform. This means that in practice in an AC circuit, it will operate at the peak value of the sinusoidal waveform. Tripping characteristics are published in AC root mean square (rms) Amperes (A). This means that the value of AC instantaneous current, I_P, which will operate the element is equal to the rms current multiplied by $\sqrt{2}$. Similarly, the value of DC instantaneous current which will operate the element is equal to the AC rms current multiplied by $\sqrt{2}$.

DC operating current of magnetic element = $\sqrt{2} \times$ AC rms operating current of magnetic element.

Time Constant

Time constants associated with DC circuits prevent the voltage of the circuit from reacting immediately when a load current is suddenly interrupted.

The time constant, τ, of a circuit indicates how quickly voltage across capacitors and current through inductors react to transient conditions.

The time constant of a capacitive circuit is the product of capacitance and resistance:
$\tau = RC$ (s).
The time constant of an inductive circuit is given by:
$\tau = L/R$ (s).

MCCBs IN DC SYSTEMS

Time Constant

Transient voltages and currents, including those produced by switching, do not approximate their steady state values until 5 time constants have elapsed.

Fault currents occurring in circuits with high time constants are extremely difficult to interrupt due to the lagging voltage. All DC breaking capacities in this section are shown with the assumption that the time constant of the circuit is restricted to the values shown below.

Fault Level	τ
Near the rated current, I_n, of the circuit breaker	<2.0ms
<2.5 x I_n	<2.5ms
<10kA	<7ms
>10kA	<15ms

APPLICATION DATA

MCCB PERFORMANCE AT HIGH ALTITUDE

General

IEC 60947-2, Low Voltage Switchgear and Controlgear states that a circuit breakers shall be capable of operating at altitudes up to 2000m. Above 2000m, it is necessary to take into account the reduction in dielectric strength and cooling effect of the air.

Effect of Altitude

The relationship between the dielectric strength of air and degree of vacuum (atmospheric pressure) is shown below.

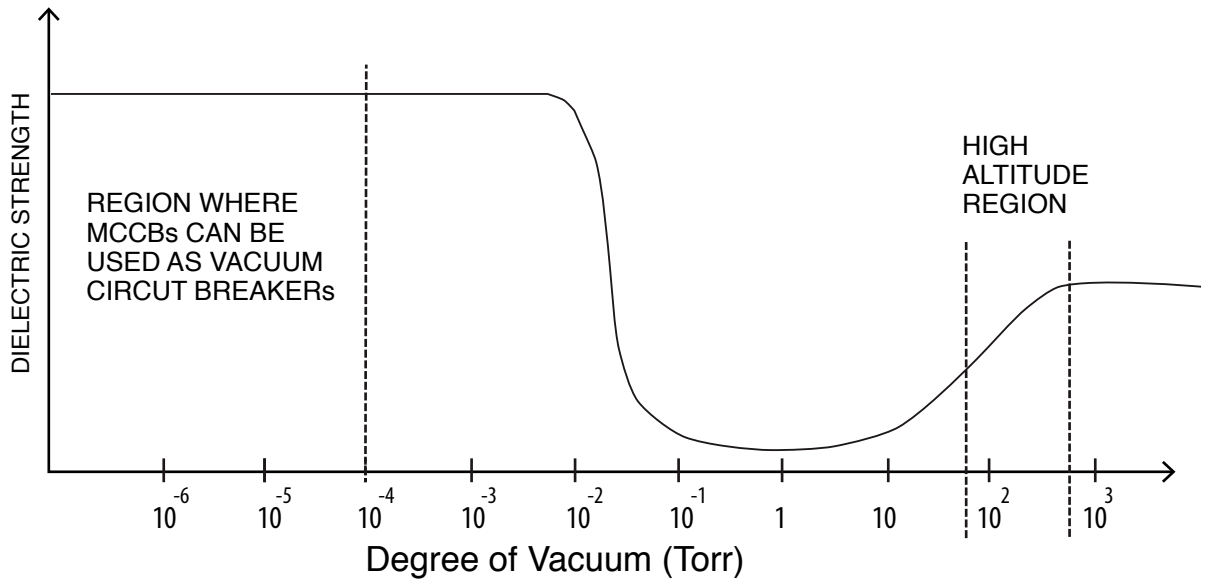

The degree of vacuum of air at the normal atmospheric pressure is 760 Torr. On the graph, the area to the left of this value is the "high altitude region". As can be seen, the dielectric strength of air decreases as the atmosphere pressure decreases (with increasing altitude). At Torr values between 10^1, it increases sharply.

At altitudes above 2000m, the rating correction factors specified in ANSI C37.13-1981 should be applied to maximum rated voltage and continuous rated current:

MCCB PERFORMANCE AT HIGH ALTITUDE

Altitude (m)	Rating Correction Factor	
	Current	Voltage
2000	1.00	1.00
2600	0.99	0.95
4000	0.96	0.8

Intermediate values of the rating correction factors (for altitudes below 4000m) may be calculated by linear extrapolation.

It should be noted that the short-time and short circuit ratings are not affected by altitude.
The insulation voltage, Ui, will be reduced according to the above table and the voltage at short circuit ratings will be reduced.

For example:

	Up to 2000m		At 4000m	
	Voltage	Ultimate breaking capacity, Icu (kA)	Voltage	Ultimate breaking capacity, Icu (kA)
S400-NJ	690V AC	20kA	550V AC	20kA
	525V AC	30kA	420V AC	30kA
	440V AC	45kA	350V AC	45kA
	415V AC	50kA	330V AC	50kA
	400V AC	50kA	320V AC	50kA
	380V AC	50kA	300V AC	50kA
	240V AC	85kA	190V AC	85kA

APPLICATION DATA

MCCB'S IN 400Hz SYSTEMS

GENERAL

It is possible to use TemBreak2 MCCBs in 400Hz circuits. This high frequency causes an increase in eddy currents (iron losses) which has a number of effects:

- increased temperature rise
- reduction of thermal trip thresholds of thermal magnetic MCCBs
- demagnetising effect on the instantaneous trip elements of thermal-magnetic MCCBs

THERMAL-MAGNETIC MCCBs

Thermal Element for Overload Protection

In the low overload region near the MCCB rated current, the required tripping current is reduced because of the heat generated by the increase in eddy currents. As a result the MCCB must be derated. However, in the high overload region (from a few hundred to several hundred percent of rated current) the time-current characteristics is approximately the same as that at 50/60Hz. This is due to the fact that the heat from the increased eddy currents forms a smaller percentage of the total heat generated by the high overload current **plus** the eddy currents, and consequently has less effect on the tripping time.

Figure 1. Illustrates how the gradient of the time-current curve of the thermal element is less steep at 400Hz than at 50/60Hz.

MCCB's IN 400Hz SYSTEMS

Thermal-Magnetic MCCBs

Magnetic Element for Instantaneous Short-Circuit Protection

The magnetic element uses the large electromagnetic force created around conductor or by a short-circuit current to operate the MCCB trip mechanism. The minimum value of current required to operate the magnetic element is the "instantaneous" trip setting. This setting is calibrated at 50 Hz. If the MCCB is used at 400Hz the required operating current will be larger due to the de-magnetising effect of the higher eddy currents.

At 400Hz, the instantaneous trip setting is estimated to be approximately twice the setting at 50Hz. (The exact value depends on the structure of the particular MCCB's magnetic element).

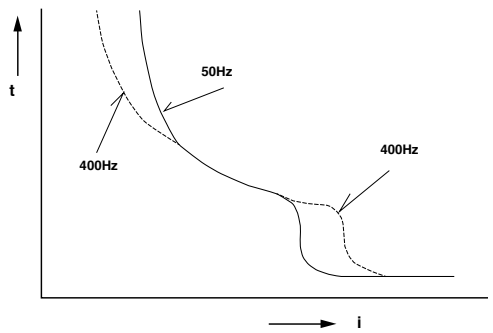

Figure 1

Figure 1. Illustrates the higher instantaneous trip threshold at 400Hz

Thermal-Magnetic-MCCBs		Conductor-Size Specified-in-IEC947-1-(mm2)	MCCB-Rating-at 400Hz
Type	Rating at 50/60Hz (A)		
125-NJ 125-GJ	20	2.5	18A
	32	6.0	30A
	50	10	45A
	63	16	58A
	100	35	89A
	125	50	110A
S160-SCJ S160-SJ	25	4.0	24A
	40	10	39A
	63	16	61A
	80	25	78A
	100	35	97A
	125	50	121A
	160	70	154A
S160-SCF S160-SF	15	2.5	14A
	20	2.5	19A
	30	6.0	29A
	40	10	39A
	50	10	49A
	60	16	58A
	75	25	73A
	100	35	97A
	125	50	121A
	160	70	154A

Table 1

APPLICATION DATA

MCCB'S IN 400Hz SYSTEMS

Terasaki recommend that electronic MCCBs are used for protection of 400Hz circuits where possible. Table 1 (previous page) shows de-rating and conductor sizes for thermal-magnetic MCCBs up to 250A. Table II shows de-rating and conductor sizes for electronic MCCBs up to 1250A.

ELECTRONIC MCCBs

The time- current characteristic of the TemBreak 2 electronic MCCBs at 400Hz follows the characteristic at 50Hz very closely, but the MCCBs must be derated when used at this frequency due to the increase in temperature caused by higher eddy currents. Table II lists the **maximum** ratings of Tembreak 2 electronic MCCBs at 400Hz. The protection **must not** be set to values higher than those listed.

Electronic MCCBs		CONDUCTOR SIZE SPECIFIED IN IEC947-1 (mm2)	MAXIMUM MCCB RATING AT 400Hz MAXIMUM I_R setting
TYPE	RATING AT (A)		
S250-NE S250-GE S250-PE	160	70	144A (Inx0.9)
	250	120	200A (Inx0.8)
S400-NE S400-GE S400-PE	250A	120	237.5A (Inx0.95)
	400A	240	360A (Inx0.9)
E630-NE S630-CE S630-GE	630A	2x185	576A (Inx0.9)
S800-NE S800-RE	630A	2x185	576A (Inx0.9)
	800A	2x240	640A (Inx0.8)
S1000-SE S1000-NE	1000A	2x(60x5t)	630A (Inx0.63)
S1250-SE S1250-NE S1250-GE	1250A	2x(80x5t)	787.5A (Inx0.63)

Table II

Note: When used at 400Hz, the rated current setting of the OCR **must not** exceed the values in column 4 of table II.

CONTENTS

TEMBREAK 2 & TEMBREAK

MCCBs FROM 12A TO 3200A • MCCBs FOR 1000V AC
MCCBs FOR 1000V DC • MCCBs WITH INTEGRAL RCD
SWITCH DISCONNECTORS • MEASUREMENT AND DATA COMMUNICATION

RATINGS AND SPECIFICATIONS	SECTION 1
PROTECTION CHARACTERISTICS	SECTION 2
APPLICATION DATA	SECTION 3
ACCESSORIES	SECTION 4
INSTALLATION	SECTION 5
DIMENSIONS	SECTION 6
ORDER CODES	SECTION 7

ACCESSORIES

Frame Reference	TB2 Lite 160	TB2 Lite 250	TB2 125	TB2 S250	TB2 S/H/L 250	TB2 H/L 400	TB2 E/S 630	
Max. In (A) of Frame	160	250	125	250	250	400	630	
TEMBREAK 2 MOULDED CASE CIRCUIT BREAKERS			S125-NJ S125-GJ	S160-NJ S160-GJ S250-NJ S250-GJ	H125-NJ L125-NJ H160-NJ L160-NJ H250-NJ L250-NJ S250-NE S250-GE S250-PE H250-NE	H400-NE L400-NE	E400-NJ S400-CJ S400-NJ S400-GJ S400-PJ S400-NE S400-GE S400-PE S630-CE E630-NE S630-NE S630-GE	
TEMBREAK 2 CIRCUIT BREAKERS WITH Icu = 70KA AT 690V Ac					L125-PJ	L400-PE		
TEMBREAK 2 CIRCUIT BREAKERS FOR 1000V Ac			VS125-NJ	VS250-NJ			XV400NE①②	
TEMBREAK 2 LITE SPACE SAVING, MONEY SAVING MOULDED CASE CIRCUIT BREAKERS	E160-SF S160-SCF S160-SF E160-SJ S160-SCJ S160-SJ	E250-SCF E250-SF S250-SF E250-SCJ E250-SJ S250-SJ						
TEMBREAK 2 CIRCUIT BREAKERS WITH INTEGRAL RESIDUAL CURRENT PROTECTION (CBR)			ZE125-NJ ZS125-NJ ZS125-GJ	ZE250-NJ ZS250-NJ ZS250-GJ				
CIRCUIT BREAKERS AND SWITCH-DISCONNECTORS FOR USE ABOVE 250V DC	S160-SD S160-GD S160-SDN	S250-SD S250-GD S250-SDN		PVS160-SDL② PVS160-SDH② PVS160-SNL② PVS160-SNH② PVS260-SDL② PVS260-SDH② PVS260-SNL② PVS260-SNH②		PVS400-NDL PVS400-NDH		
SWITCH-DISCONNECTORS	S160-SN	S250-SN	S125-NN	S250-NN			S400-NN	

	TB2 H/L 800	TB2 1000	TB2 1250	TB2 1600	TB 3200
	800	1000	1250	1600	2000
	H800-NE	S800-CJ S800-NJ S800-RJ S800-NE S800-RE S1000-SE	S1250-SE S1250-NE S1250-GE	S1600-NE S1600-SE	XS2000NE①② XS2500NE①② XS3200NE①②
	L800-NE L800-PE	S1000-NE			
		XV630PE①② XV800PE①②	XV1250NE ①②		
	PVS800-NDL PVS800-NDH	S800-ND S1000-ND	XS1250ND①	XS1600ND①	XS2000-ND① XS2500-ND① XS3200-ND①
		S800-NN	S1250-NN	S1600NN	XS2000NN①② XS2500NN①②

TEMBREAK 2 MCCBs AND SWITCH DISCONNECTORS
- Electrical Control (Internal Accessories)
- Termination of Control Wiring
- Electrical Control (Motorised Operation)
- Operating Handles & Locking Devices
- Insulation Accessories
- Dual Supply Changeover Systems

Pages 131 - 157

TEMBREAK 2 LITE MCCBS AND SWITCH DISCONNECTORS
- Electrical Control (Internal Accessories
- Termination of Control Wiring
- Electrical Control (Motorised Operation)
- Operating Handles & Locking Devices
- Insulation Accessories

Pages 158 - 170

TEMBREAK MCCBs AND SWITCH DISCONNECTORS
- Electrical Control (Internal Accessories
- Termination of Control Wiring
- Electrical Control (Motorised Operation)
- Operating Handles & Locking Devices

Pages 171 - 184

CONTENTS | SECTION 4

①Tembreak 1. Frame sizes vary from Tembreak 2.
②Contact Terasaki for details of accessories.

ACCESSORIES

TEMBREAK 2 MCCBs AND SWITCH DISCONNECTORS

Electrical Control Using Internally Mounted Accessories

Electrical control accessories for TemBreak 2 are designed with the installer in mind. Status and alarm contacts, remote tripping coils and undervoltage protection coils are of modular design and convenient to use.

(1) (2) (3) (4) (5) (6)

1) Heavy-duty auxiliary switch
2) Heavy-duty alarm switch
3) General-purpose auxiliary switch
4) General-purpose alarm switch
5) Shunt trip
6) Undervoltage trip

- All auxiliary, alarm switches and shunt trips are common up to 1600A. Undervoltage trips are split between two sizes: 125 to 630A and 800 to 1600A.
- All accessories are endurance tested to the same level as MCCBs.
- TemBreak 2 internal accessories are easily **field-installable.**
- All accessories are individually packaged and are supplied with fitting instructions.
- Control wiring is terminated on the accessory screw terminal. Alternatively a terminal block which clips to the side of the MCCB is available.

Installing Accessories in a 4 pole S400 model

The internal accessories can be easily installed in the field without special tools or product training.

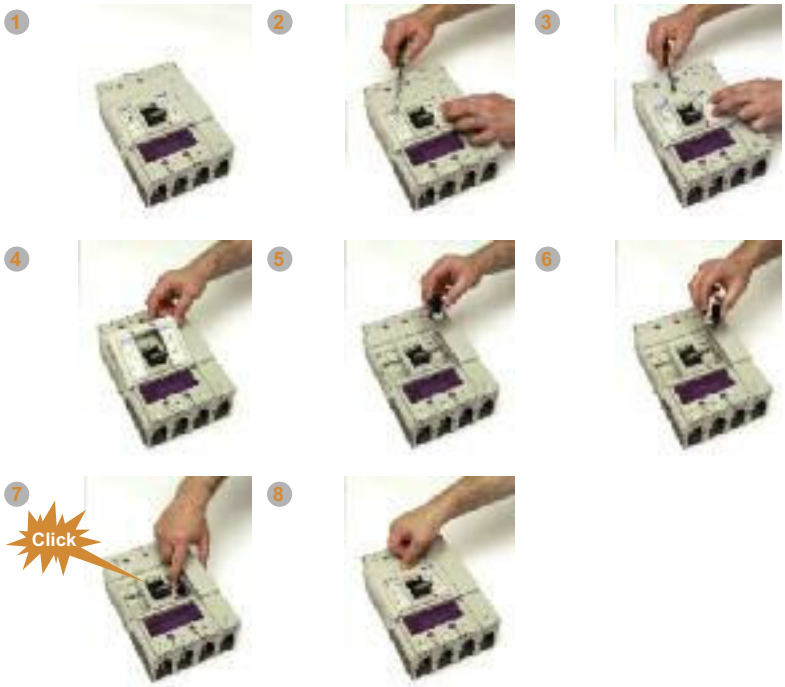

Easy field-Installation of Accessories

- Internal accessory can be simply plugged into position.
- No tools are required for this, except a screwdriver to lift the MCCB front cover clips.
- Accessories fit with a firm click when installed correctly.
- Colour coding of accessories helps identification and installation.

TEMBREAK 2 MCCBs AND SWITCH DISCONNECTORS

Electrical Control Using Internally Mounted Accessories

Valid Maximum Accessory Combinations

Frame Reference	TB2 S125 TB2 S250 TB2 S/H/L 250	TB2 H/L400 TB2 E/S 630	TB2 H/L 800 TB2 1000	TB2 1250 TB2 1600
	S125 H125 L125 VS125 ZE125 ** ZS125 ** S160 H160 L160 PVS160 S250 H250 L250 VS250 ZE250 ** ZS250 **	E400 E630 S400 S630 H400 L400 PVS400	S800 H800 L800 S1000 PVS800	S1250 S1600
General Purpose Auxiliary Switch General Purpose Alarm Switch Shunt Trip	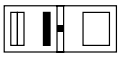			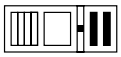
General Purpose Auxiliary Switch General Purpose Alarm Switch Undervoltage Trip				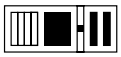
Heavy Duty Auxiliary Switch Heavy Duty Alarm Switch Shunt Trip	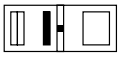		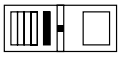	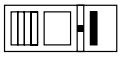
Heavy Duty Auxiliary Switch Heavy Duty Alarm Switch Undervoltage Trip				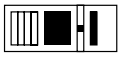

Auxiliary Switch

Alarm Switch

Shunt Trip

Undervoltage Trip

- General purpose and heavy duty status indication switches cannot be mixed in the same MCCB.
- It is not possible to install a shunt trip and an undervoltage trip in an MCCB as they occupy the same location. Undervoltage trips can provide remote tripping if necessary by wiring a normally closed contact or pushbutton in series with the protected supply.
- Undervoltage trips with time delays require an external time delay controller which clips to the side of the MCCB.

** Shunt trip and undervoltage cannot be installed in this model.

ACCESSORIES

TEMBREAK 2 MCCBs AND SWITCH DISCONNECTORS

Electrical Control Using Internally Mounted Accessories

Status Indication Switches

General Purpose Auxiliary Switch

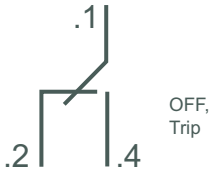

Terminal Designations and Function of General Purpose Auxiliary Switch

General Purpose Auxiliary Switch (AX)

An auxiliary switch electrically indicates the ON or OFF status of the MCCB. The general purpose type is a changeover switch with 3 terminals.

A microcurrent version is available for switching currents as low as 1mA.

Auxiliary switches are colour coded grey. The cable capacity of the terminals is 0.5 to 1.25mm², bare cable.

The general purpose auxiliary switch meets the requirements of IEC 61058-1.

General Purpose Alarm Switch

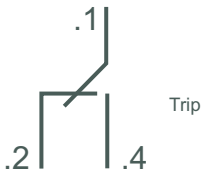

Terminal Designations and Function of General Purpose Alarm Switch

General Purpose Alarm Switch (AL)

An alarm switch electrically indicates the TRIP status of the MCCB. The general purpose type is a changeover switch with 3 terminals.

A microcurrent version is available for switching currents as low as 1mA.

Alarm switches are colour coded grey and black. The cable capacity of the terminals is 0.5 to 1.25mm², bare cable

The general purpose alarm switch meets the requirements of IEC 61058-1.

General purpose auxiliaries and alarm switch ratings

Volts (V)	AC Amperes (A) Resistive Load	AC Amperes (A) Inductive Load	Volts (V)	DC Amperes (A) Resistive Load	DC Amperes (A) Inductive Load	Minimum Load
440	-	-	250	-	-	100mA at 15V DC.
240	3	2	125	0.4	0.05	
110	3	2	30	3	2	

Microcurrent versions

DC Volts (V)	DC Amperes (A) Resistive Load	Minimum Load
30	0.1	1mA at 5V DC and 30V DC.

TEMBREAK 2 MCCBs AND SWITCH DISCONNECTORS

Electrical Control Using Internally Mounted Accessories

Status Indication Switches

Heavy Duty Auxiliary Switch

Terminal Designations and Function of Heavy Duty Auxiliary Switch, a contact

Terminal Designations and Function of Heavy Duty Auxiliary Switch, b contact

Heavy Duty Alarm Switch

Terminal Designations and Function of Heavy Duty Alarm Switch, a contact

Terminal Designations and Function of Heavy Duty Alarm Switch, b contact

Ratings of Heavy Duty Auxiliary and Alarm Switches					
AC			DC		
Volts (V)	Amperes (A)		Volts (V)	Amperes (A)	
	Resistive Load	Inductive Load		Resistive Load	Inductive Load
500	1	1	-		
440	3	3	250	0.5	0.5
240	4	4	125	1	1
110	5	5	48	3	2.5
48	6	6	24	6	2.5

Heavy Duty Auxiliary Switch (AX)

The heavy duty auxiliary switch has an impulse withstand voltage (Uimp) of 6kV and is suitable for isolating safety circuits. The auxiliary switch electrically indicates the ON or OFF status of the MCCB. The heavy duty type is a bridge switch with two terminals. It is available in either normally open or normally closed configurations.

Heavy duty auxiliary switches are colour coded grey. The cable capacity of the terminals is 1.25 to 2.5mm². bare cable.

The heavy duty auxiliary switch meets the requirements of IEC 60947-5-1.

It has direct opening action, recommended by IEC 60204-1 Safety of Machinery - Electrical Equipment for Machines.

Heavy Duty Alarm Switch (AL)

The heavy duty alarm switch has an impulse withstand voltage (Uimp) of 6kV and is suitable for isolating control circuits. The alarm switch electrically indicates the TRIP status of the MCCB. The heavy duty type is a bridge switch with two terminals. It is available in either normally open or normally closed configurations.

Heavy duty auxiliary switches are colour coded grey and black. The cable capacity of the terminals is 1.25 to 2.5mm², bare cable.

The heavy duty alarm switch meets the requirements of IEC 60947-5-1.

It has direct opening action, recommended by IEC 60204-1 Safety of Machinery - Electrical Equipment for Machines.

ACCESSORIES

TEMBREAK 2 MCCBs AND SWITCH DISCONNECTORS

Electrical Control Using Internally Mounted Accessories

Remote Tripping Devices

Shunt Trip (SHT)

A shunt trip allows an MCCB to be tripped remotely on the application of the rated coil voltage across the shunt trip terminals. TemBreak 2 shunt trips have **continuously rated coils** and are suitable for use in electrical interlocking applications.

The MCCB contacts and toggle will move to the tripped position when the shunt trip is operated.

The permissible voltage range is 85% to 110% for AC or 75% to 125% for DC.

The cable capacity of the terminals is 0.5 to 1.25mm², bare cable. Shunt trips are colour coded grey.

Shunt Trips

Terminal Designations of Shunt Trips

Ratings of Shunt Trips							
Rated Voltage	Voltage AC			Voltage DC			
	100-120	200-240	380-450	24	48	100-120	200-240
Excitation Current (A)	0.014	0.014	0.0065	0.03	0.03	0.011	0.011

Under Voltage Trip (UVT)

An undervoltage trip will trip the breaker automatically when the voltage applied to the terminals of the undervoltage coil drops to between 70% and 35% of its voltage rating. The undervoltage trip prevents the circuit breaker being closed unless a voltage corresponding to at least 85% of its voltage rating is applied across the terminals of the undervoltage coil.

The MCCB contacts and toggle will move to the tripped position when the under-voltage trip operates.

Undervoltage trips with AC operating voltages are available with 500ms time delays. Time-delay units are fitted to the outside of MCCBs.

The cable capacity of the terminals is 0.5 to 1.25mm², bare cable. Undervoltage trips are colour coded grey and black. A UVT controller is required for time delay UVT only.

Undervoltage Trips

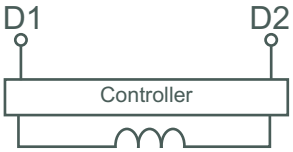

Terminal Designations of Undervoltage Trips

Ratings of Undervoltage Trips										
	Power supply capacity (VA)							Excitation current (mA)		
MCCB Model	Rated Voltage	Voltage AC						Voltage DC		
		100-120		200-240		380-450		24	100-120	200-240
S125, H125, L125, S160, H160, L160, PVS160, 250, H250, L250, E400, S400, H400, L400, E630, S630 VS125, VS250, PVS400		1.4		2.8		2.3		23	10	10
MCCB Model	Rated Voltage	Voltage AC						Voltage DC		
		100-110	115-120	200-220	230-240	380-415	440-450	24	100-120	200-240
S800, H800, L800, S1000, S1250, S1600, PVS800		1.5	1.6	2.4	2.9	2.1	2.3	29	13	11

TEMBREAK 2 MCCBs AND SWITCH DISCONNECTORS

Termination of Control Wiring

Terminal blocks are for optional use with all types of internally mounted accessory.

Terminal Block for Plug-in MCCBs

The terminal block for a plug-in MCCB consists of:

- a male section pre-fitted with 3 cables with which clips easily to the back of the MCCB
- a female section with 3 user terminals which clips easily into the plug-in base.

Up to 4 terminal blocks can be installed on a 125A, 160A or 250A frame MCCB. Up to 5 terminal blocks can be installed on a 400A to 800A frame MCCB.

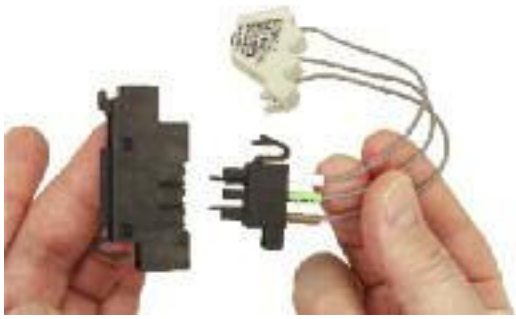

Terminal Block for Plug-in MCCBs

1250A MCCBs utilise different terminal block arrangement from 800A model and below. Contact Terasaki for more details.

Terminal Block for Front-Connected and Rear-Connected MCCBs (TF)

A terminal block facilitates convenient and accessible control wiring to internally mounted accessories especially the accessories with lead wire.
It allows the use of control wiring cables with larger cross-sectional area than permitted by the internal accessories themselves.

This terminal block can be clipped to either side of the MCCB. If mounted on the left incoming wiring will be fed vertically up to the terminals. If mounted on the right, the incoming wiring will be fed vertically down to the terminals.

The maximum incoming cable size to the terminal block is 2.0mm^2. 11 terminals or 6 terminals can be specified. See pages 261-262.

Terminal Block for Front-Connected and Rear-Connected MCCBs

ACCESSORIES

TEMBREAK 2 MCCBs AND SWITCH DISCONNECTORS

Electrical Control Using Motorised Operation Up To 1000A

Overview - Motor Operators (MC)

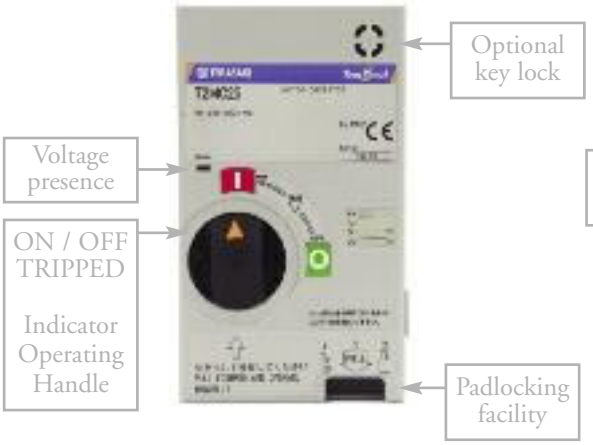

Motor Operator for 125A and 250A Frame MCCB's

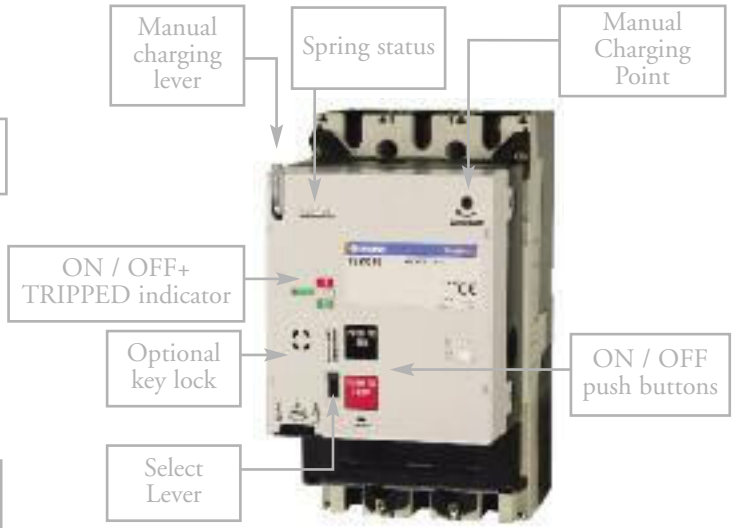

Motor Operator for 400A and 630A Frame MCCB's

Motor operators provide the possibility of opening and closing an MCCB on application of electrical control signals. TemBreak 2 motor operators are extremely reliable, having been designed to endure the same switching duty as the host MCCB.

- Easy field-installation.
- Fast operation (≤100ms).
- Positive contact indication.
- Padlocking facility as standard (Maximum 3, hasp diameter 8mm).
- Versions available with automatic reset function.
- Voltage presence indication.

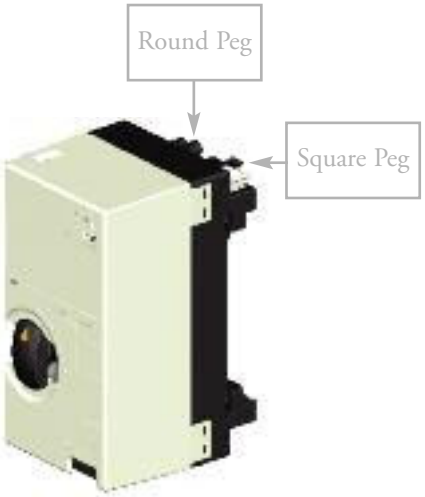

Motor Operator for 125A and 250A frame MCCB's

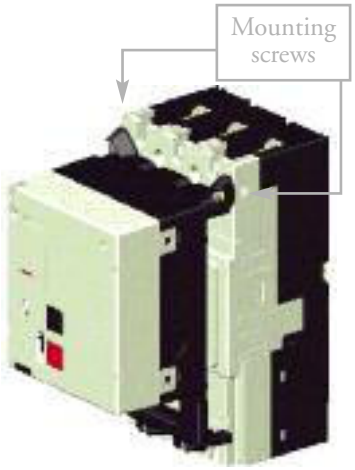

Motor Operator for 400A and 630A frame MCCB's

Motor operators for 125A and 250A frame are mounted on the front of the breaker. They can be rapidly fitted by locating the round pegs and square pegs on the motor into corresponding round and square holes on the breaker. It takes less than 10 seconds to secure the motor to the MCCB. Two levers securely lock the motor into position. No tools are needed to fit the motor operator.

400A frame to 1600A frame motor operators are held in place with mounting screws. They can be installed easily in the field.

TEMBREAK 2 MCCBs AND SWITCH DISCONNECTORS

Electrical Control Using Motorised Operation Up To 1000A

Indication of ON, OFF or TRIPPED Status

The handle of 125A and 250A frame motor operators has dual functions:

1. Indication of ON, OFF or TRIPPED status as shown in the photographs below;
2. Manual operation when handle is pulled out. The supply to electrical control circuits inside the motor operator is cut when the handle is pulled out.

MCCB on

MCCB off

MCCB tripped

Motor operators for 400A to 1000A frame MCCBs incorporate a mechanical flag which indicates the ON, OFF and TRIPPED status of the MCCB. They can be manually charged using the lever provided.

Ratings and Specifications

Type of Motor Operators		T2MC12	T2MC25	T2MC40	T2MC80
Applicable MCCB		S125	S160, S250	E400	S800, S1000, PVS800
		VS125	VS250, PVS160	S400, PVS400	H800
			H125, H160, H250	E630	L800
			L125, L160, L250	S630	
Rated operating voltage	100-110 V AC	■		■	■
	200-220 V AC	■		■	■
	230-240 V AC	■		■	■
	24 V DC	■		■	■
	48 V DC	■		■	■
	100-110 V DC	■		■	■
	200-220 V DC	■		NA	NA
Operating current/ Starting current Peak value (A)	100-110 V AC	4.5/8		ON ---/2.3 OFF, RESET 1.4/3.7	ON ---/2.2 OFF, RESET 1.7/3.5
	200-220 V AC	4/8		ON ---/2.3 OFF, RESET 1.1/3.5	ON ---/2.2 OFF, RESET 1.3/3.5
	230-240 V AC	3.5/7		ON ---/2.3 OFF, RESET 1.1/3.5	ON ---/2.2 OFF, RESET 1.3/3.5
	24 V DC	18/26		ON ---/7.2 OFF, RESET 3.9/8.1	ON ---/12 OFF, RESET 6.0/11.5
	48 V DC	12/18		ON ---/7.2 OFF/RESET 2.0/5.1	ON ---/7 OFF, RESET 3.2/6.5
	100-110 V DC	2.2/6		ON ---/2.4 OFF/RESET 1.2/3.8	ON ---/2.2 OFF, RESET 1.3/3.5
	200-220 V DC	2.2/5.5		—	—
Operating method		Direct drive		Spring charging	Spring charging
Operating time (s)	ON	0.1		0.1	0.1
	OFF	0.1		1.5	1.5
	RESET	0.1		1.5	1.5
Operating switch rating		100V, 0.1 A, Opening voltage 44V, current 4mA		100V, 0.1 A, Opening voltage 48V, current 1mA	
Power supply required		300 VA minimum		300VA minimum	300VA minimum
Dielectric properties (1 min)		1500 V AC (1000V AC for 24V DC and 48V DC motors)			
Weight		1.4 kg		3.5kg	3.5kg

■ = Available

Note: Operating times shown in the above table apply only when the rated operational voltage is supplied to the motor operator.
The voltage supplied to the motor operator must be within the range of 85% and 110% of the rated operating voltage.

ACCESSORIES

TEMBREAK 2 MCCBs AND SWITCH DISCONNECTORS

Electrical Control Using Motorised Operation Up To 1000A

Motor Operator Control Circuits

Control Wiring Plug

MCCB and Motor Operator Showing Control Wiring Socket

The Control circuits for Motor Operators are connected using a simple plug and socket system.

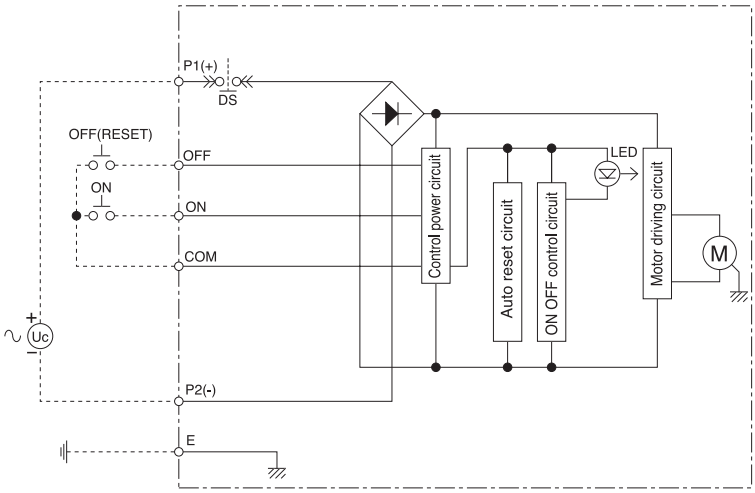

Control circuit for Motor Operators

Operation

The motor operator incorporates a self-hold circuit for the closing and opening signals. Therefore a momentary (over 50msec.) open or close signal will ensure a complete operation.

When the breaker trips, the breaker is reset by applying a signal to the OFF terminals of the motor.

When a UVT is used with a motor operator, design the control circuit so that the UVT is energised **before** a reset or close signal is sent to the motor operator. A 40ms time delay in the reset and close signals is sufficient to allow the UVT to energise.

When a shunt trip is used with a motor operator, design the control circuit so that the shunt trip is de-energised before a reset or close signal is sent to the motor operator.

When a mechanical interlock is used with motor operators, design the control circuit to provide electrical interlocking between the motor operators. The electrical interlocking should prevent a close signal being sent to a motor operator unless the other motor operator and circuit breaker are in the OFF position.

Auto- reset

Two types of motor operator are available: motor operators without auto-reset and motor operators with auto-reset. The correct type of motor operator should be selected for the application. MCCB auxiliary and alarm switches do not have to be used in the control circuits for motor operators whether they have auto-reset or not, saving cost and space.

TEMBREAK 2 MCCBs AND SWITCH DISCONNECTORS

Electrical Control Using Motorised Operation 1250A and 1600A

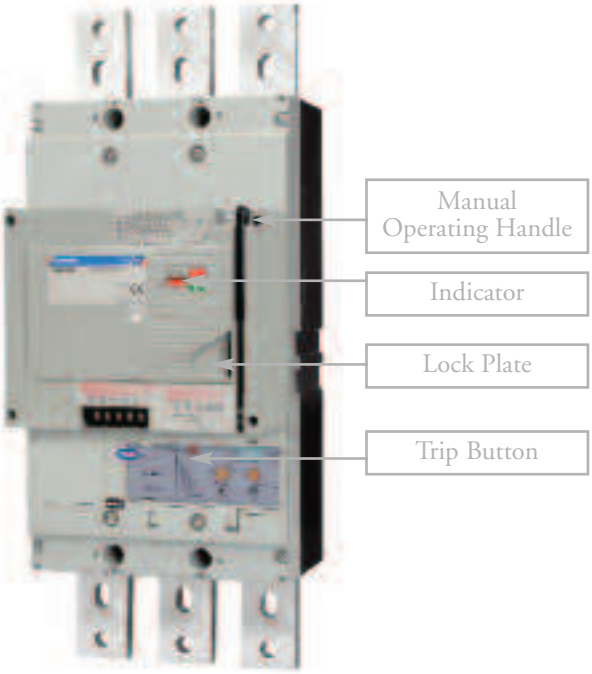

Type 1250, 1600A, S1250 IS1600

Positive Contact Indication

- Colour coding indicates the true position of the contacts clearly: ON (red), OFF (green), TRIP (white).

Easy Maintenance

- Breaker mounting, removal, and even setting changes can be done without removing the motor operator.

Manual ON/OFF Operation with One Stroke

Fast Closing Operation

- Closing in 60ms or less. The closing time remains constant over repeated operations.

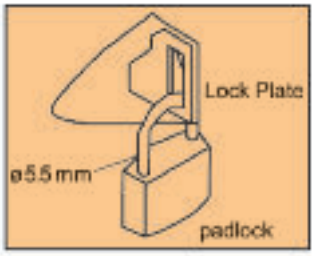

The breaker can be padlocked in the "OFF" position by pulling out the lock plate, and locking it with a padlock. When the breaker is "ON", the lock plate cannot be pulled out. Up to three lock can be used. Padlock not supplied.

Ratings and Specifications

Type of Motor Operators			T2MCX6
Applicable MCCB			S1250
			S1600
Rated Operating Voltage (V)	AC	100-115V 50/60Hz	■
		200-230V 50/60Hz	■
	DC	100-110V	■
		24V	■
Lock in "OFF" position (standard)			■
Manual Trip Button			✻
Steady-state r.m.s. Amp/inrush Amp (A)	AC100-115V	ON①	–/3.1
		OFF, RESET①	1.8/6.0
	AC200-230V	ON②	–/1.2
		OFF, RESET②	1.0/3.2
	DC100-110V	ON③	–/0.8
		OFF, RESET③	1.1/4.2
	DC24V	ON	–/4.5
		OFF, RESET	4.0/12.0
Type of operation			Spring Charged
Operating Time(s)	ON (Maximum values)		0.06
	OFF, RESET④		3
Control Switch Ratings			250V, 5A
Power Source Capacity (VA)			300VA
Dielectric withstand voltage The value in brackets for 24V DC			AC1500V (AC500V)
Weight (kg)			6.4

■ = Available

✻ Trip button on breaker to be used (accessible with motor fitted)

NOTE

① Maximum values at AC115V, 50Hz
② Maximum values at AC230V, 50Hz
③ Maximum values at DC110V
④ Maximum values at the rated operating voltages

ACCESSORIES

TEMBREAK 2 MCCBs AND SWITCH DISCONNECTORS

Electrical Control Using Motorised Operation 1250A And 1600A

Motorised Operation

ON CONTROL

When the ON switch is closed, the latch release coil (LRC) is excited and the closing spring is released. The breaker quickly closes and goes into ON status. When the closing spring is released, the limit switch (LS) is opened and the LRC is de-excited.

OFF CONTROL

When the off switch is closed, self-hold control relay (Y) is activated and motor (M) operates to charge the closing spring. The breaker changes to OFF status.

RESET CONTROL

When the breaker is in TRIP status, closing the OFF switch activates self-hold control relay (Y) and starts motor (M). Motor (M) charges the closing spring and resets the breaker.

Manual Operation

ON, OFF (RESET)

The breaker can be opened (OFF or RESET) and closed (ON) alternately by pulling the operating lever down in one full stroke. ON/OFF operation of the breaker is possible without charging or releasing the closing spring.

EMERGENCY TRIP

Opening the breaker (OFF) using the motor operator takes up to 3 seconds. If a remote emergency OFF function is necessary, incorporate the shunt trip device (SHT) or the undervoltage trip device (UVT) into the breaker.

PRECAUTIONS REGARDING USAGE

- If using the UVT option, be sure to reset the UVT before closing the breaker.
- The motor operator must be supplied with voltage within the following range:

  DC: 75-110% of rated voltage
  AC: 85-100% of rated voltage
  Operation at low voltage may burn out the motor.

Anti-pumping Function

When the breaker is turned ON and the closing spring is released, self-hold control relay X is active. Xa-contact is held closed, and Xb-contact is opened. While the ON switch is closed, latch release coil (LRC) will not be excited even if the OFF switch is closed or an automatic reset circuit is being used. Pumping is thus prevented.

Automatic Charge/ discharge Function

If the breaker is closed manually (ON) while the power source is on, the handle switch (HS) induces automatic release of the closing spring. Likewise, if the breaker is opened manually (OFF), the springs are automatically charged. If the breaker is opened or closed while the power source is off, later when the power source is turned on, the closing spring will automatically be charged or discharged to match the ON/OFF status of the breaker. This automatic charge/discharge function is necessary to prepare the closing mechanism for the next ON/OFF operation.
The sound of the charging or discharging of the spring should not be mistaken for a malfunction.

TEMBREAK 2 MCCBs AND SWITCH DISCONNECTORS

Electrical Control Using Motorised Operation 1250A and 1600A

Automatic Reset

An alarm switch (a-contact) fitted in the breaker, can be used to induce recharging of the closing spring and automatically reset the MCCB. Connect the automatic reset circuit as shown below.

If the alarm switch is used, a pulse signal will be produced in the automatic reset circuit when the alarm is activated. Be sure to use a self-hold circuit to avoid possible problems caused by this pulse signal.

It is recommended that a time delay of approximately 3 minutes is introduced to the automatic reset circuit for thermal magnetic MCCB's In the event of an overload trip this will prevent the motor operator repeatedly driving the MCCB between the tripped and reset positions while the thermal element is hot.

If an alarm signal is also required for external control, use a 2 alarm switch combination.

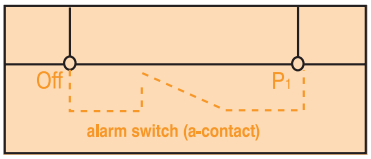

Connect Circuit AC and DC

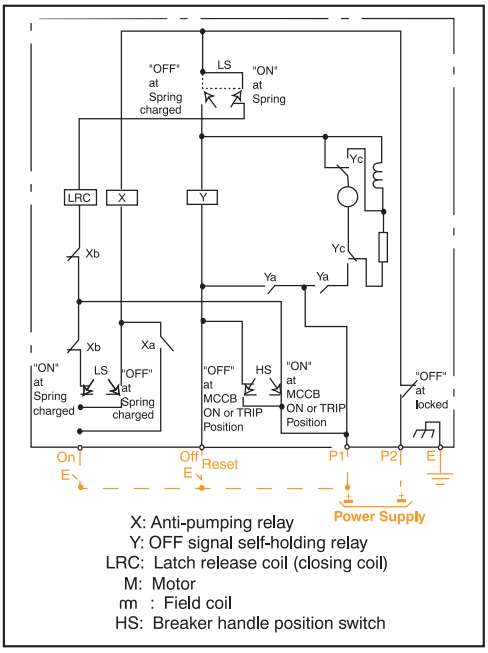

Note: Customer wiring shown in orange

SECTION 4

ACCESSORIES

TEMBREAK 2 MCCBs AND SWITCH DISCONNECTORS

Operating Handles & Locking Devices

TemBreak 2 external operating handles are extremely reliable, having been designed to endure the same switching duty as the host MCCB.

Safety Features

- Door interlock mechanism with override facility included as standard
- IP55 as standard (HS), IP3X as standard (HB)
- IP65 optional (HS), IP5X optional (HB)
- Locks OFF with up to 3 padlocks (8mm hasps)
- Optional Key fitting facility is available for Castell FS1 (HS)
  Contact us for the details of mounting dimension.
- Optional keylock in OFF position (HB)
- Available Grey handle with Black base or Red handle with Yellow base (HS)
- Available in black or red and yellow (HB)
- A trip test can be performed with the external operating handle fitted to the MCCB

Orientation

To switch the breaker from OFF to ON the external operating handle is rotated through 90 degrees in a clockwise direction.

MCCB ON

MCCB ON

The ON (I) and OFF (O) indication of the external operating handle can be re-oriented in steps of 90 degrees with respect to the operating mechanism. This allows the indication position to remain the same whether the breaker is mounted vertically (right side up or upside down) or horizontally (on its left side or on its right side). The hole cut-out dimensions for a panel or door will remain unchanged if the external operating handle is re-oriented. The external operating handle's axis of rotation is on the intersection of the centre lines of a 3P MCCB. This means that the positioning of the door cutouts is symmetrical for breakers mounted horizontally on either side of a vertical busbar system.

TEMBREAK 2 MCCBs AND SWITCH DISCONNECTORS

Operating Handles & Locking Devices

Door Mounted Handle (HS) Standard Type

The door mounted handles allow breakers installed in control centers or switchboards to be manually operated from outside and complies with IEC 60204-1.
It consists of an operating mechanism that is mounted on the breaker, an operating handle that is mounted on the door, and a shaft that transmits the turning force from the handle to the operating unit.
The shaft can be cut to the required length.
The shaft support makes easy to insert to the operating handle when the panel door is being closed.

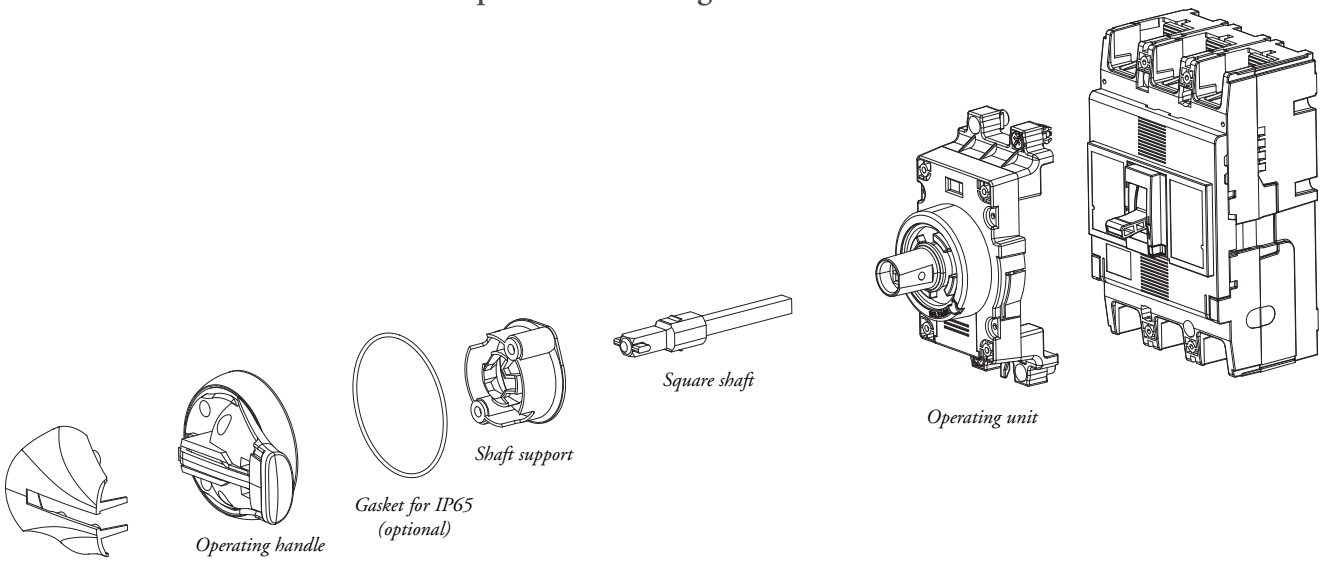

Door Interlock Mechanism

The external operating handle keeps the panel door locked when in the ON position.

OFF open type
The handle is turned to the OFF position to open the panel door.

• Door interlock release button
The release button enables the panel door to be opened with the handle in the ON position.
To release: push the release button on the side of the operating handle with a flat-bladed screwdriver.

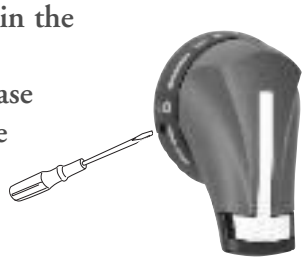

Handle Lock Mechanism

• Padlock (Standard)
This mechanism allows the breaker to be padlocked in the OFF position.
Padlocks are not supplied.
Up to three padlocks can be installed.

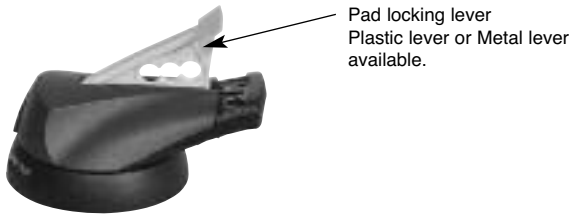

ACCESSORIES

TEMBREAK 2 MCCBs AND SWITCH DISCONNECTORS

Operating Handles & Locking Devices

Breaker Mounted Handle (HB)

Breaker Mounted Handle Padlocked in the OFF Position

This external operating handle is used to operate a circuit breaker mounted just behind a compartment door with the door closed. The operating unit and the handle itself are mounted directly onto the circuit breaker. The handle protrudes through a cutout in the door. A moulded door flange is supplied with the external operating handle which covers the cutout from the front.

Padlocking and keylocking is possible in the OFF position.

Locking Devices

Toggle locking devices allow MCCBs to be locked ON or OFF using up to three padlocks. Locking devices for 125A to 160A and 250A frame models accept padlocks with 5mm hasp diameter. Locking devices for 400A to 1600A frame models accept padlock with 8mm hasp diameter.

S250 Locked OFF

S400 Locked OFF

TemBreak 2 Cam for HS Handle (Castell Interlocking)

An operating cam can be used in conjunction with castell bolt locking system as a solution to provide personnel safety and ensure switchgear equipment is used in the correct mode. The cam utilises the shaft from the HS style handle as a means to interlocking the switchgear.

TEMBREAK 2 MCCBs AND SWITCH DISCONNECTORS

Tembreak 2 Neutral Link

A disconnectable neutral conductor offers the facility of isolating the neutral connection by incorporating a sliding link disconnector. With safety in mind, insulating shrouds can be purchased separately for each neutral link rating.

Current ratings: 125A, 250A, 400A, 630A, 800A, 1000A

Neutral Link with Optional Shroud

TemBreak 2 Door Flange

Door Flanges are available for MCCBs up to 1000A. Door flanges are recommended to be used to cover the cut-out of a switchboard panel. Two types of door flanges are available, one for MCCB with motor operator fitted, and one style without.

ACCESSORIES

TEMBREAK 2 MCCBs AND SWITCH DISCONNECTORS

Insulation Accessories

Terminal Covers for 1250A MCCB

Terminal covers are used to prevent direct contact with live MCCB terminations. They also provide additional insulation to reduce the possibility of a short circuit between phases or to earth when large conductors are used.

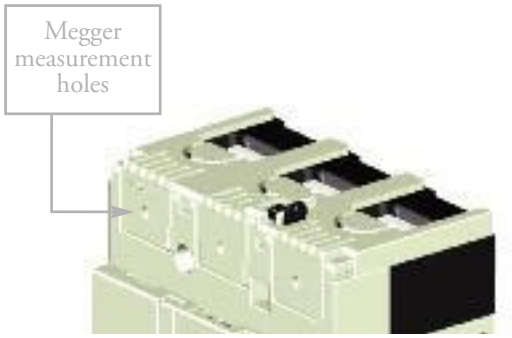

Terminal Cover Lock with Lead Seal

General features

- Terminal covers for 125A to 630A frame models require no tools for installation.
- Terminal covers for 800A to 1250A are fixed using self-tapping screws.
- Terminal covers for 125A to 1250A frame models have an IP20 ingress protection rating 1250A.
- Terminal covers are ordered individually. Two terminal covers are required to cover both the line and load terminals of an MCCB. Each cover can either be fitted to the top or bottom of the MCCB.
- Terminal covers for 125A to 1250A have a megger measurement hole of 4mm diameter on each phase.

Options

- A terminal cover for 125A to 630A frame models include facility for an anti-tampering seal to be added.

TEMBREAK 2 MCCBs AND SWITCH DISCONNECTORS

Insulation Accessories

Terminal Covers for Front Connections (CF)

Terminal covers for front connection are suitable for covering the exposed live parts of conductors terminated on the MCCB.

Terminal Covers for Front Connection

Flush Terminal Covers

Flush Terminal Covers (CS)

Flush terminal covers are available for 125A to 630A frame models and are useful for increasing the ingress protection rating at the terminals without increasing the overall length. They can be used with busbar and for direct entry of stranded cable (with cable clamp terminals (FW), refer to Section 5, Installation).
Flush terminal covers are identical to rear terminal covers for 400A and 630A frame models.
The user can remove a section of the rear terminal cover using a tool to allow entry of the conductor.

Terminal Covers for Rear Connection (CR)

Terminal covers for rear connection are available for 125A to 1000A frame models and may be used on MCCBs fitted with rear connections (RC) or plug-in connections (PM). They prevent access to the terminals from the front and top.

Terminal Covers for Rear Connection

ACCESSORIES

TEMBREAK 2 MCCBs AND SWITCH DISCONNECTORS

Insulation Accessories

Interpole Barriers (BA)

Interpole barriers provide maximum insulation between phases at the terminals of the MCCB. They cannot be fitted at the same time as any of the terminal covers. Interpole barriers for use on one end of the MCCB are supplied as standard. Additional interpole barriers can be ordered individually. All interpole barriers can easily be fitted to either end of an MCCB.

MCCB moulds have been designed to accept an additional interpole barrier between two adjacent MCCBs.

MCCB Fitted with Interpole Barriers on Both Ends

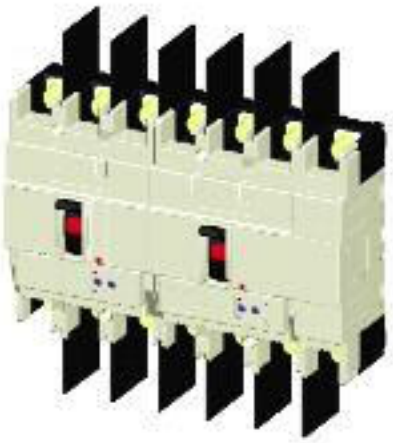

Interpole Barriers between Adjacent MCCBs

TEMBREAK 2 MCCBs AND SWITCH DISCONNECTORS

Dual Supply Changeover Systems

Where more than one AC voltage source is available to a distribution system it is often necessary to prevent multiple sources supplying the system at one time. Interlocking accessories are used together with two MCCBs to prevent both being in the ON state simultaneously. This provides a secure mechanical means of preventing the connection of two supply sources.

An automatic changeover controller can monitor the status of two supplies and control the switching of two MCCBs according to pre-programmed parameters. When an automatic changeover controller is interfaced to a pair of interlocked MCCBs fitted with remote control accessories, a secure, fully automatic changeover system is achieved.

Link Interlock

Changeover Pair with Link Interlock and Motor Operators

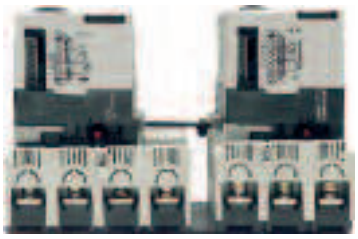

Viewed from Below

Link Interlock (ML)

Link interlocks are available for 125A to 1000A frame models and consist of a mechanism mounted to each MCCB in an adjacently mounted pair. The link between each mechanism inhibits the closure of one MCCB unless the other is in the OFF position.

Link interlocks can be used on a mixture of 3 and 4 pole breakers of the same frame size.

The TemBreak 2 link interlock is an innovative design which will save space, time and money for switchboard builders in that:

- Installation is extremely simple. Link interlocks are field-installable and only require a screwdriver to fit.
- Link interlocks replace the accessory cover on the front of the breaker.
- Motor operators and operating handles are compatible with link interlocks.
- The interlock is installed on the front of the MCCB and does not therefore interfere with copperwork or cables.
- No need to buy factory-built backplates with MCCBs and interlocks pre-fitted.

An important safety feature is that the interlocks do not allow a control system to close a second power supply on to a fault. If a breaker has tripped its partner is mechanically prevented from closing. This differs from other interlocks you may be familiar with, which allow a breaker to be closed while its partner is in the tripped position.

Front link-type and wire-type interlocks operate according to the following table:

STATUS OF MCCB 1	STATUS OF MCCB 2	VALIDITY OF COMBINATION
ON	ON	NOT ALLOWED
ON	TRIP	NOT ALLOWED
TRIP	ON	NOT ALLOWED
TRIP	TRIP	NOT ALLOWED
OFF	OFF	ALLOWED
ON	OFF	ALLOWED
OFF	ON	ALLOWED
TRIP	OFF	ALLOWED
OFF	TRIP	ALLOWED

The electrical control system of an automatic changeover scheme which uses these interlocks should not attempt to switch the MCCBs to a combination indicated as "NOT ALLOWED" in the above table otherwise damage to the motor operations will occur.

TEMBREAK 2 MCCBs AND SWITCH DISCONNECTORS

Dual Supply Changeover Systems

Wire Interlock (MW)

Wire interlocks for 125A to 1000A frame models consist of two mechanisms connected by a cable. The mechanisms are mounted on two MCCBs located at a distance from each other which is limited by the length and bend radius of the cable. The mechanisms and cable inhibit the closure of one MCCB unless the other is in the OFF position. Each mechanism is ordered separately. Cables of 1.0m or 1.5m length are also ordered as separate items.

Wire interlocks can be used on a mixture of 3 and 4 pole MCCBs of different frame sizes. This allows potential cost savings by using lower rated MCCBs for the alternative power supply. MCCBs can be mounted in different switchboard compartments or on different planes.

Changeover Pair with Wire Interlock and Motor Operators

View from above

The TemBreak 2 wire interlock is an innovative design which will save space, time and money for switchboard builders in that:

- Installation is extremely simple.
  Wire interlocks are field-installable up to 1000A models.
- Wire interlocks replace the accessory cover on the front of the breaker.
- Motor operators and operating handles are compatible with wire interlocks.
- Interlocking of MCCBs mounted in different compartments is possible.
- No need to buy factory-built backplates with MCCBs and interlocks pre-fitted.

Wire interlocks are available also for 1250A and 1600A frame models.

The mechanisms are mounted on the back of two MCCBs. MCCBs cannot be mounted directly to a flat plate, but are installed on a frame to ensure space for the interlock mechanism. (Factory Fit).

An important safety feature is that the interlocks do not allow a control system to close a second power supply on to a fault. If a breaker has tripped its partner is mechanically prevented from closing. This differs from other interlocks you may be familiar with, which allow a breaker to be closed while its partner is in the tripped position.

Front link-type and wire-type interlocks operate according to the following table: See Over

ACCESSORIES

TEMBREAK 2 MCCBs AND SWITCH DISCONNECTORS

Dual Supply Changeover Systems

Front link-type and wire-type interlocks operate according to the following table:

STATUS OF MCCB 1	STATUS OF MCCB 2	VALIDITY OF COMBINATION
ON	ON	NOT ALLOWED
ON	TRIP	NOT ALLOWED
TRIP	ON	NOT ALLOWED
TRIP	TRIP	NOT ALLOWED
OFF	OFF	ALLOWED
ON	OFF	ALLOWED
OFF	ON	ALLOWED
TRIP	OFF	ALLOWED
OFF	TRIP	ALLOWED

The electrical control system of an automatic changeover scheme which uses these interlocks should not attempt to switch the MCCBs to a combination indicated as "NOT ALLOWED" in the above table otherwise damage to the motor operations will occur.

Slide Interlock (MS)

Slide interlocks are manually operated toggle locking devices which can be installed between two adjacent MCCBs. Depending on the position of the slide, one or other of the MCCBs on either side of a slide interlock is inhibited from being in the ON position. Slide interlocks can be used between MCCBs of the same number of poles and of the same frame size.
Slide interlocks can be installed in the field and are padlockable in both positions.

Slide Interlock Installed Between two MCCBs

TEMBREAK 2 MCCBs AND SWITCH DISCONNECTORS

Dual Supply Changeover Systems

TemTransfer 2 Automatic Changeover Controller

TemTransfer 2 is fully configurable Automatic Changeover Controller (ACC) for use in standby power applications. The module will monitor the voltage and frequency of the incoming AC mains (utility) supply and in the event of a failure will issue a start command to the generator control system.

The controller (ACC) is designed to monitor the incoming AC mains supply (1 or 3 phases) for under/over voltage and under/over frequency. Should any of the parameters fall out of limit, the module will issue a command to the generating set controller. Once the generator set is available and producing an output within limits, TemTransfer 2 will control the transfer device and switch the load from the mains (utility) to the generating set.

When the mains (utility) supply returns to within limits, the module will command a return to the mains (utility) supply and shut down the generator after a suitable cooling run. Various timing sequences are available to prevent nuisance starting or unnecessary supply breaks.

TemTransfer 2 Product Features

TemTransfer 2's back-lit LCD shows system status and indicates any system warnings via a 4 line text display. Red and green LEDs indicate the operational status of the network. The module can be easily configured by using TemTransfer 2 Configuration Suite PC Software, via an interface kit (optional).

- Back-lit LCD with 4 line text display
- Real time clock
- PC / Front panel configuration
- Volt-free relays
- Configurable timers
- 5 configurable outputs
- 10 configurable inputs
- Event log
- Auto start inhibit
- Load inhibit

Supporting many different topologies, configurable timers, volt-free digital inputs and outputs make the TemTransfer 2 controller a fully flexible solution to suit a wide variety of applications.

ACCESSORIES

TEMBREAK 2 MCCBs AND SWITCH DISCONNECTORS

Dual Supply Changeover Systems

TemTransfer 2 Specifications

CONTINUOUS VOLTAGE RATING
8V to 35V Continuous

CRANKING DROPOUTS

Able to survive 0V for 50 mS, providing supply was at least 10V before dropout and supply recovers to 5V.

This is achieved without the need for internal batteries. LEDs and backlight will not be maintained during cranking.

MAXIMUM OPERATING CURRENT
167 mA at 24V

MAXIMUM STANDBY CURRENT
66 mA at 24V

MAINS (UTILITY) VOLTAGE RANGE
15V to 333V AC (L-N)

OUTPUTS
OUTPUT A (MAINS/UTILITY)

Normally closed volt-free output 8A AC at 250V AC

OUTPUT B (GENERATOR)
Normally open volt-free output 8A AC at 250V AC

OUTPUT C (START AND RUN)
Normally closed volt-free output
8A DC at 35V DC
(UL Rating 30V)

OUTPUT D
Changeover volt-free output
8A AC at 250V DC

GENERATOR VOLTAGE RANGE
15V to 333V AC (L-N)

FREQUENCY RANGE
3.5 Hz to 75 Hz

DIMENSIONS OVERALL

215mm x 158mm x 42mm
8.5" x 6.2" x 1.6"

PANEL CUT-OUT
182mm x 137mm
7.2" x 5.4"

MAXIMUM PANEL THICKNESS

8mm
0.3"

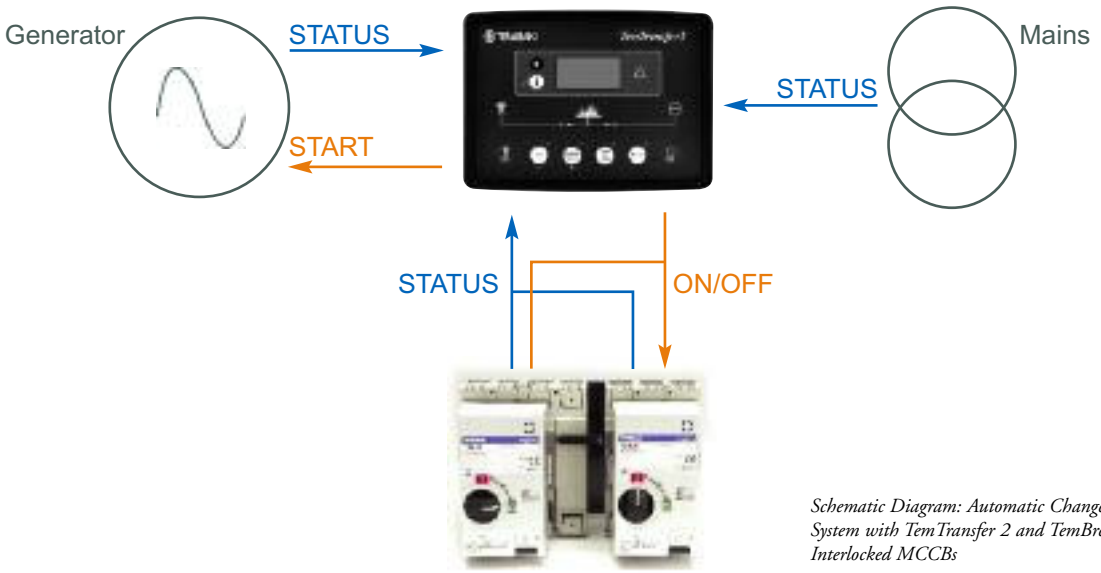

Schematic Diagram: Automatic Changeover System with TemTransfer 2 and TemBreak 2 Interlocked MCCBs

TEMBREAK 2 MCCBs AND SWITCH DISCONNECTORS

Dual Supply Changeover Systems

TemTransfer 2 Power Supply Module

Supplied as a separate unit, the power supply module for the TemTransfer 2 Automatic Changeover Controller is self-seeking. The module will provide DC power output to the ACC whens mains power is lost, this is achieved by automatically switching between either generator or battery supply. Housed within a strong plastic casing the module can be either DIN or chassis mounted and has 3 red LEDs which provide system status.

With short circuit protection, the module offers many features and is available with 24V DC output.

AC SUPPLY VOLTAGE RANGE
90V to 305V (L-N)

BS EN 60950-1-2006
DC OUTPUT
OUTPUT
1 A DC at 24V DC

CURRENT LIMIT
1.5 A DC
RISE TIME
<20 ms

RIPPLE AND NOISE
<1%

EFFICIENCY
>80%

REGULATION LINE
<0.1% Vo

LOAD <5% Vo

PROTECTIONS
Short Circuit
Over Circuit
Reverse Polarity

DIMENSIONS OVERALL
136mm x 140mm x 63mm
5.4" x 5.5" x 2.5"

WEIGHT
0.5 kg

ENVIRONMENTAL TESTING STANDARDS

ELECTRO-MAGNETIC COMPATIBILITY
BS EN 61000-6-2-2005
BS EN 61000-6-4-2007

ELECTRICAL SAFETY
BS EN 60950-1-2006

OPERATING TEMPERATURE

ACCESSORIES

TEMBREAK 2 MCCBs AND SWITCH DISCONNECTORS

Dual Supply Changeover Systems

The following schematic diagram illustrates an automatic changeover system employing the TemTransfer 2 Automatic Changeover Controller.

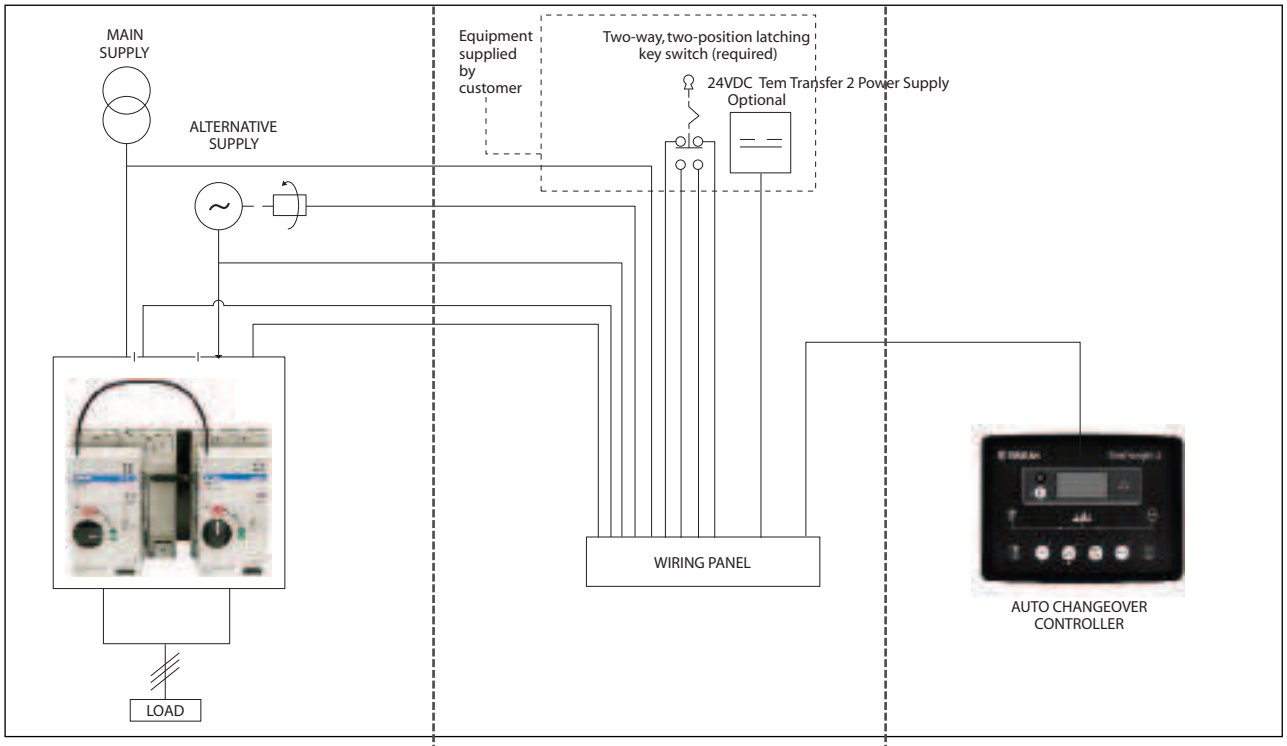

Mechanically and Electrically Interlocked MCCBs and Accessories

Up to 1000A accessories, including mechanical interlocks, can be fitted in the field.

The unique design of the interlocks means that a special mounting plate is not necessary.

Contact us for a list of the accessories required.

Wiring Panel for TemTransfer 2 (Optional)

This optional wiring panel centralises wiring-connections, and simplifies wiring of a TemTransfer 2 automatic changeover system.

It consists of a control element and terminal block.

Contact us for the wiring diagram.

TemTransfer 2 Automatic Changeover Controller (refer to page 124 for details).

Terasaki can supply TemTransfer 2 pre-programmed to your specification (contact us for details), or with an optional interface for self-programming (refer to section 7 for order codes). Otherwise supplied with factory default settings.

TemTransfer 2 controller requires 24V DC supply for its operation.

TEMBREAK 2 LITE MCCBs AND SWITCH DISCONNECTORS

Electrical Control Using Internally Mounted Accessories

Electrical control accessories for the TemBreak 2 Lite range are designed with the installer in mind. Status and alarm contacts, remote tripping coils and undervoltage protection coils are of modular design and convenient to use.

Two Alarm Switches can be installed easily

Practical internal accessories can be installed with one touch

- *Auxiliary Switch*
- *Alarm Switch*
- *Shunt Trip*
- *Undervoltage Trip*

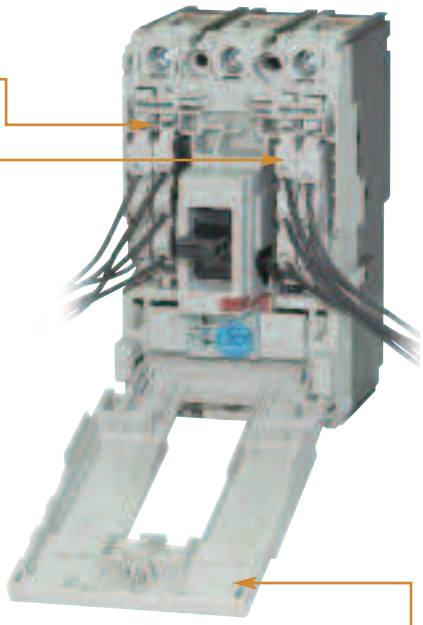

Unique accessory cover opens with one screw

Secure accessory cover retains MCCBS name plate

Undervoltage Trip

Shunt Trip

Alarm Switch (Left)

Auxiliary Switch

ACCESSORIES

TEMBREAK 2 LITE MCCBs AND SWITCH DISCONNECTORS

Electrical Control Using Internally Mounted Accessories

Connection Diagrams and Terminal Numbers

Accessory	Combination symbol	Connection diagram and terminal No.	Remarks
Shunt trip device (SH)		• Without anti-burn switch C1 C2	Shunt trips are continuous rating without anti-burn switches.
Undervoltage trip device (UV)		For AC/DC U1 U2	
		D1 D2	
Auxiliary switch (AX)		12/AXb1 14/AXa1 11/AXc1	1pc Aux. SW installed.
		12/AXb1 14/AXa1 22/AXb2 24/AXa2 11/AXc1 21/AXc2	2pcs Aux. SW installed.
		12/AXb1 14/AXa1 22/AXb2 24/AXa2 32/AXb3 34/AXa3 42/AXb4 44/AXa4 11/AXc1 21/AXc2 31/AXc3 41/AXc4	4pcs Aux. SW installed.
Alarm switch (AL)		92/ALb1 94/ALa1 TRIP 91/ALc1	1pc Alarm. SW installed.
		92/ALb1 94/ALa1 02/ALb2 04/ALa2 TRIP TRIP 91/ALc1 01/ALc2	2pcs Alarm. SW installed.

Valid/Maximum Accessory Combinations

Moulded Case Circuit Breakers

Type	Number of poles	AX Auxiliary switch	AL Alarm switch	SH Shunt trip	UV Under voltage trip	AX–AL	AX–SH	AX–UV	AL–SH	AL–UV	AX–AL–SH	AX–AL–UV
S160-SCF	2											
E160-SF S160-SCF S160-SF E160-SJ S160-SCJ S160-SJ S160-SN	3•4											
E250-SCF E250-SF S250-SF E250-SCJ S250-SJ E250-SJ S250- N	3•4											

Notes:

①: The two-pole type breaker obtained by modifying a three-pole breaker by removing the conductive part of its central pole is regarded as the same as the three-pole type.

TEMBREAK 2 LITE MCCBs AND SWITCH DISCONNECTORS

Electrical Control Using Internally Mounted Accessories

Status Indication Switches

Ratings of Auxilary and Alarm (AX/AL)

The applicable load of the switch shall be no larger than the rating and no smaller than the minimum load.

Type of breaker	Standard							For microload ①		
	AC (V)			DC (V)			Minimum load	DC (V)		Minimum load
	Voltage (V)	Current (A)		Voltage (V)	Current (A)			Voltage (V)	Current (A)	
		Resistive load	Inductive load ②		Resistive load	Inductive load ②			Resistive load	
E160-SF, S160-SCF, S160-SF, E160-SJ, S160-SCJ, S160-SJ, S160-SN E250-SCF, E250-SF, S250-SF, E250-SCJ E250-SJ, S250-SJ, S250-SN	480	-	-	250	-	-	DC15V 100mA	30	0.1	DC5V 1mA
	250	3	2	125	0.4	0.05				
	125	3	2	30	3	2				

Note: ① This is a custom-made product. When ordering for this product, specify that it is intended for minute load use.
Note: ② The inductive load means power factor of no smaller than 0.4 and time constant of no larger than 7 ms.

Operation of AX and AL

Switch	Breaker status	[ON]	[OFF]	[TRIP]
Auxiliary switch (AX) status	12/AXb 14/AXa 91/AXc	11/AXc-14/AXa "Closed" 11/AXc-12/AXb "Open"	11/AXc-14/AXa "Open" 11/AXc-12/AXb "Closed"	11/AXc-14/AXa "Open" 11/AXc-12/AXb "Closed"
Alarm switch (AL) status	92/ALb 94/ALa TRIP 91/ALc	91/ALc-94/ALa "Open" 91/ALc-92/ALb "Closed"	91/ALc-94/ALa "Open" 91/ALc-92/ALb "Closed"	91/ALc-94/ALa "Closed" 91/ALc-92/ALb "Open"

Remote Tripping Devices

Ratings of Shunt Trip (SHT)

Type of breaker	Peak exciting current, A						
	Rated voltage	AC (V)			DC (V)			
		100-120	200-240	380-450	24	48	100-120	200-240
E160-SF, S160-SCF, S160-SF, E160-SJ, S160-SCJ, S160-SJ, S160-SN E250-SCF, E250-SF, S250-SF, E250-SCJ, E250-SJ, S250-SJ, S250-SN		0.014	0.014	0.0065	0.03	0.03	0.011	0.011

Notes:
① The permissible voltage range is from 85% to 110% of the rated voltage for AC or 75 % to125 % thereof for DC.
Ensure that the voltage does not drop or exceed the permissible voltage range when SHT is actuated.
② Breaker contacts usually start opening within 30 ms after the rated voltage is applied to the breaker.

TEMBREAK 2 LITE MCCBs AND SWITCH DISCONNECTORS

Electrical Control Using Internally Mounted Accessories

Remote Tripping Devices

Ratings of Undervoltage Trip (Instantaneous)

Type of breaker	Power supply capacity, VA			Exciting current, mA		
	Rated voltage	AC (V)			DC (V)	
	100-120	200-240	380-450	24	100-120	200-240
E160-SF, S160-SCF, S160-SF, E160-SJ, S160-SCJ, S160-SJ, S160-SN E250-SF, E250-SCF, S250-SF, E250-SJ E250-SCJ, S250-SJ, S250-SN	1.4	1.5	2.3	23	10	3.5

Ratings of Undervoltage Trip with Time Delay

Time delays: 500±300 msec.

Applicable breakers	Power supply capacity, VA							Exciting current, mA				
	Rated voltage	AC (V)						DC (V)				
		100-110	115-120	200-220	230-240	380-415	440-450	24	100-110	115-120	200-220	230-240
E160-SF, S160-SCF, S160-SF, E160-SJ, S160-SCJ, S160-SJ, S160-SN E250-SF, E250-SCF, S250-SF, E250-SJ E250-SCJ, S250-SJ, S250-SN	1.1	1.3	2.1	2.5	1.5	1.7	22	7.6	8.3	8.6	9.3	

Undervoltage trips with AC operating voltage are available with time delay (500+/-300 mili seconds).
UVT controllers are installed on the right hand side of the breaker. For this option refer to page 142 details.

TEMBREAK 2 LITE MCCBs AND SWITCH DISCONNECTORS

Termination of Control Wiring

Terminal Blocks for Front Connected and Rear Connector MCCB's (TF)

A terminal block facilitates convenient and accessible control wiring to internally mounted accessories by allowing the use of control wiring cables with larger cross-sectional area than permitted by the internal accessories.

This terminal block can be clipped to either side of the MCCB. The customer should specify left or right hand side version depending on the internal accessory combination required.

Block fitted on 250A MCCB

ACCESSORIES

TEMBREAK 2 LITE MCCBs AND SWITCH DISCONNECTORS

Electrical Control Using Motorised Operation

Motor Operators (MC)

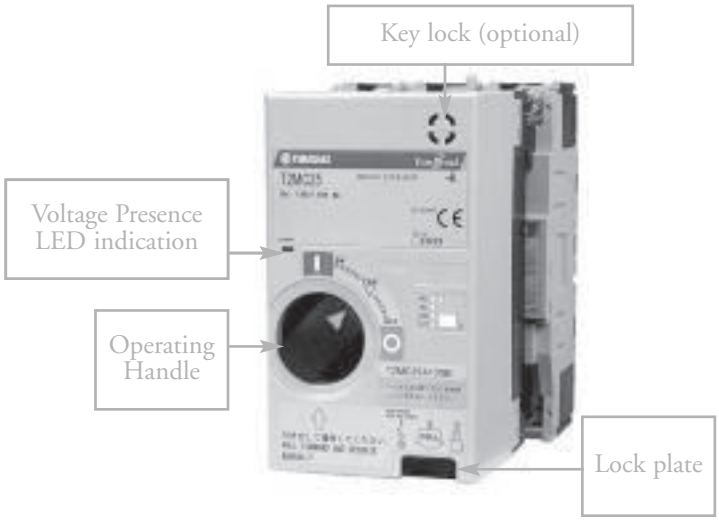

Ratings and Specifications

		T2MC25L
Type of breaker		E250-SF, E250-SCF, S250-SF, E250-SJ, E 250-SCJ, S250-SJ, S250-SN
Rated operational voltage 1		● AC100-110V ● AC200-220V ● AC230-240V ● DC24V ● DC48V ● DC100-110V ● DC200-220V
Peak steady-state/ starting current, A 2	AC100-110V	4.5/8
	AC200-220V	4/8
	AC230-240V	3.5/7
	DC24V	18/26
	DC48V	12/18
	DC100-110V	2.2/6
	DC200-220V	2.2/5.5
Operation method		Motor driven (direct drive system)
Operating times at rated voltage	ON	0.1
	OFF/RESET	0.1 ③④
Operating switch ratings		100V 0.1A (Open voltage/current: 44 V/4 mA) ⑤
Power supply required		300VA or higher
Dielectric withstand voltage (for one minute)		AC1500V (AC 1000 V for DC 24/48 V)
Weight		1.4kg

Notes:
① : Permissible operating range is 85 to 110%. A power transformer is available as option for AC380V or AC400- 460V.
② : The currents shown are the maximum values at the maximum rated operational voltage.
③ : The operating time is the value when the rated operational voltage is supplied.
Allow a longer time for the motor operator to complete the operation.
④ : The motor operator is of a short time duty. Do not subject it to more than 10 continuous ON-OFF operations. If this occurs, allow the motor operator to cool for at least 15 minutes.
⑤ : When the rated operational voltage is DC24V the open voltage will be DC22V.

Features

Installation and Removal Ease

Simply rotate two knobs allows the motor operator to be installed on or removed from the breaker.

HIgh-speed, Stable Actuation

The quick operating time makes it possible to use the motor operators for synchronized closing of breakers.

Silent Operation

T2MC25L use a direct drive system, providing operational silence.

"Lock-in Off" Capability

This capability allows the breaker to be padlocked in the OFF state. Up to three padlocks with a 5 mm hasp diameter can be used. Padlocks are not supplied.

TEMBREAK 2 LITE MCCBs AND SWITCH DISCONNECTORS

Electrical Control Using Motorised Operation

Motorized Operation

The motor operator has an input-signal self-hold circuit: closing the ON or OFF switch (see circuit diagrams shown below) momentarily allows activating the motor operator. To reset the tripped breaker to the OFF position, close the OFF (RESET) switch.
The voltage presence LED indication is on when the power is supplied to the motor operator.

Auto Reset Feature (optional)

The auto reset feature allows the breaker to be automatically reset approx 1.5 seconds after the breaker trips open. This option contains auto-reset switches and does not require to use auxiliary or alarm switches installed in the breaker.

Note: that after the thermal OCR trips a thermal-magnetic breaker, the breaker cannot be immediately closed though it can be auto-reset.
Wait for a few minutes after the tripping and provide a close signal to the breaker.

This option resets the tripped breaker automatically, regardless of the cause of the tripping.

Manual Operation

Pull the operating handle out. Rotating the handle counter clockwise turns ON the breaker and clockwise turns OFF or resets the breaker.

Operation Precaution

1. Ensure that the actual operation voltage ranges from 85% to 110% of the rated one.
2. Use operation switches whose ratings and power capacity is as specified in the "Ratings and Specifications" table on the previous page.
3. Use noise filters if the control power supply of the motor operator is shared by peripheral devices. Otherwise, power supply noise may cause malfunction of the peripheral devices.

Control Circuit Diagrams of Motor Operators

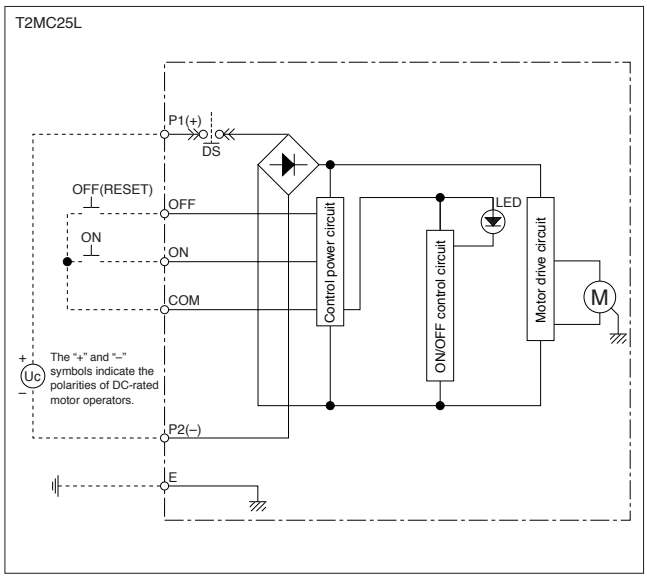

TEMBREAK 2 LITE MCCBs AND SWITCH DISCONNECTORS

Operating Handles and Locking Devices

Breaker Mounted Handle (HB)

This external operating handle is used to operate a circuit breaker mounted just behind a compartment door with the door closed.

The operating mechanism and handle are mounted directly onto the circuit breaker. The handle protrudes through a cut-out in the door. A mould flange is supplied with the handle, covering panel cut-out from the front.

Outer View

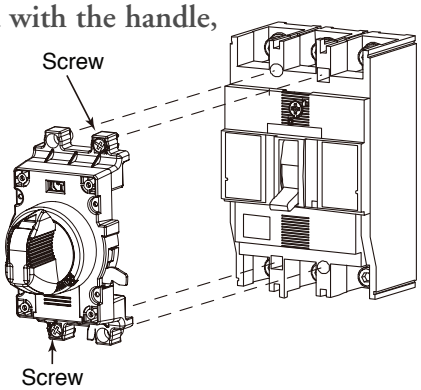

Mounting Instructions

Mounting of external operating handle assembly

- Make sure that the breaker is in the OFF position.
- Put the external operating handle assembly onto the breaker in place so that the breaker handle is engaged with the handle catch of the assembly. Tighten the screw to secure the handle assembly.

Installation of handle escutcheon and latch plate

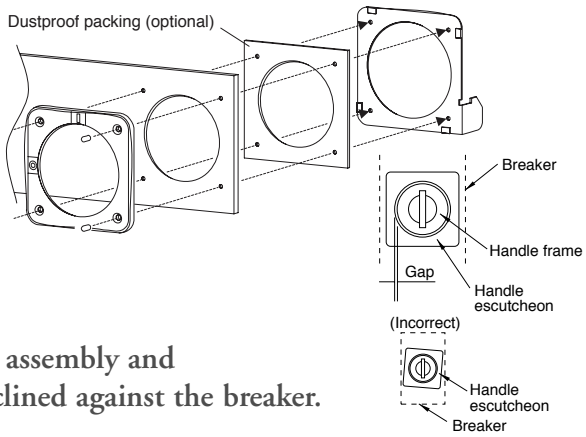

- Drill holes in the panel according to the panel cutout dimensions.
  Sandwich the panel between the handle escutcheon and latch plate and temporarily tighten using the supplied screws.
- Close the panel.
- Make adjustment so that the gap between the handle assembly and handle escutcheon is even and the assembly is not inclined against the breaker.

Breaker Mounting Direction

The ON and OFF positions of the handle and the positions of drilled holes in the panel do not need to be changed depending on the breaker mounting direction. The upper supply type is standard.

R : Right power supply type	U: Upper power supply type (standard)	L: Left power supply type
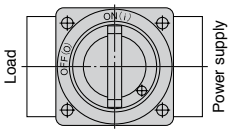	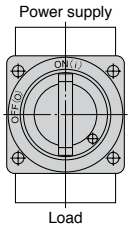	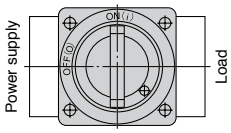

- For a change in mounting direction, see the Operating Instructions packaged with the product.

TEMBREAK 2 LITE MCCBs AND SWITCH DISCONNECTORS

Operating Handles and Locking Devices

Panel Lock Mechanism

This external operating handle keeps the panel door locked when in the 'ON' position.

(1) Reset. Open

The handle is turned to the 'RESET/OPEN COVER' position to open the panel door.

Panel lock release knob

The release knob enables the panel door to be opened with the handle in the 'ON' position. To release: turn the release knob in the direction of anti-clockwise with a flat-bladed screwdriver.

Safety interlock (Standard)

The safety interlock prevents the breaker from turning ON as long as the panel is open. This interlock can be released using the hook lever.

Handle Lock Mechanism

Padlock (Standard)

This Mechanism allows the breaker to be padlock in the OFF position. Padlocks are not supplied.

Up to three padlocks can be installed.

Padlock dimensions (mm)

Type of handle	A	Dia.
T2HB	13 min	ø5.5-8

IP30	standard specification
IP50	optional, with a dust proof packing

ACCESSORIES

TEMBREAK 2 LITE MCCBs AND SWITCH DISCONNECTORS

Operating Handles and Locking Devices

Door Mounted Handle

The door mounted operating handle allows breakers installed in control centers or switchboards to be manually operated from outside and complies with IEC 6020-1.
It consists of an operating mechanism that is mounted on the breaker, a handle that is mounted on the door and a shaft that transmits the turning force from the handle to the operating unit.
The shaft support acts as a guide when the panel door is being closed.

Outer View

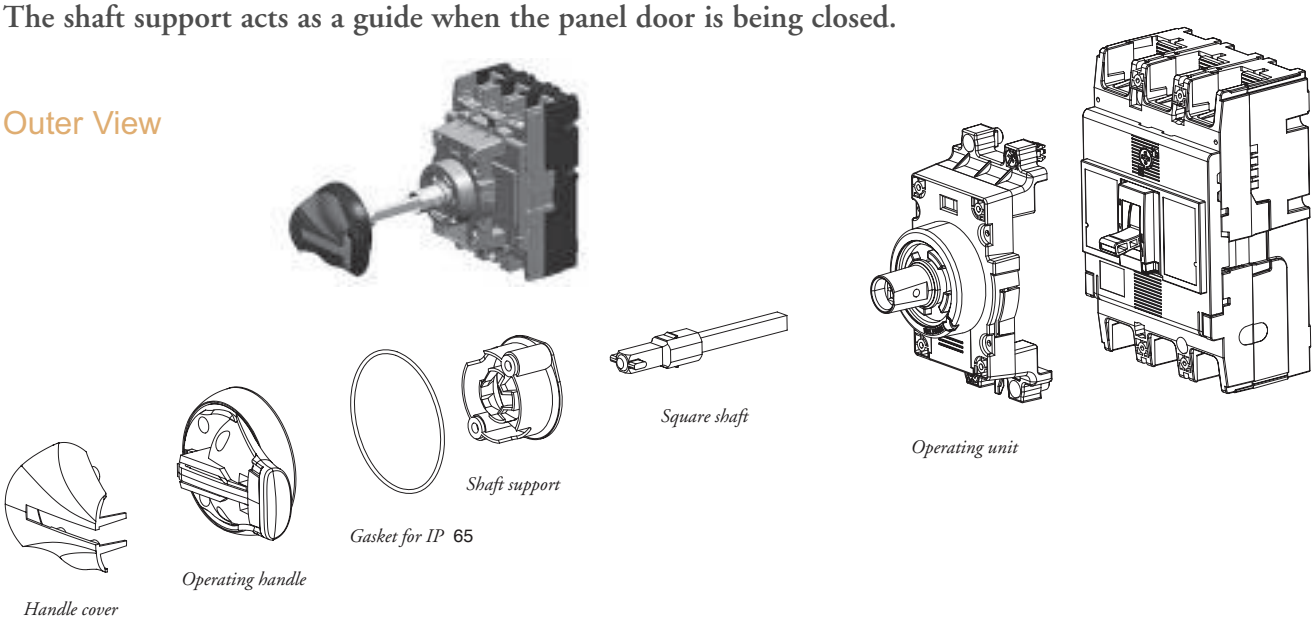

Breaker Mounting Direction

The ON and OFF positions of the handle and the positions of drilled holes in the panel do not need to be changed depending on the breaker mounting direction.

Horizontal mounting / ON to move the breaker handle right	Vertical mounting / ON to move the breaker handle up	Horizontal mounting / ON to move the breaker handle left
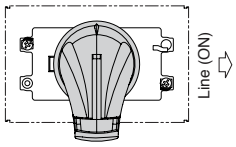	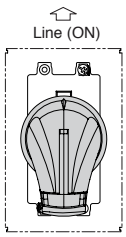	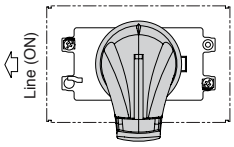

Operating Direction of Handles

Rotate the operating handle clockwise to turn the breaker on.

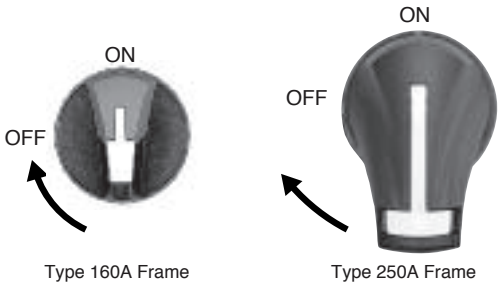

Rotate clockwise to turn the breaker ON

TEMBREAK 2 LITE MCCBs AND SWITCH DISCONNECTORS

Operating Handles and Locking Devices

Panel Lock Mechanism

The external operating handle keeps the panel door locked when in the 'ON' position.

OFF open type

The handle is turned to the OFF position to open the panel door.

Panel lock release button

The release button enables the panel door to be opened with the handle in the "ON' position. To release: push the release button on the side of the operating handle with a flat-bladed screwdriver.

Toggle Lock Mechanism

Padlock (Standard)

This Mechanism allows the breaker to be padlock in the OFF position.
Padlocks are not supplied.
Up to three padlocks can be installed.

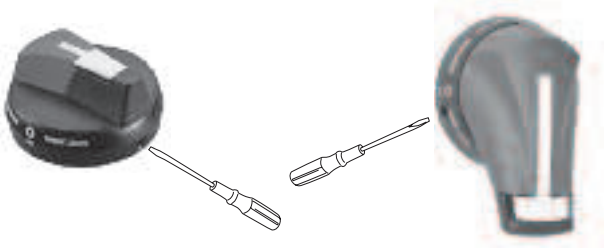

Type 160A Frame *Type 250A Frame*

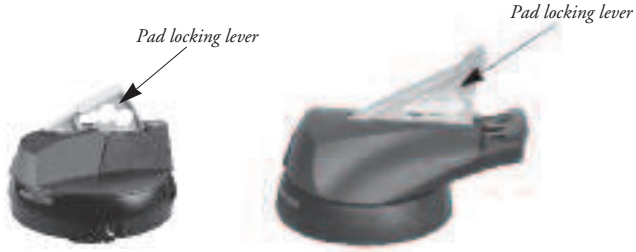

Type 160A Frame *Type 250A Frame*

Locking Devices (Toggle Lock HL)

Toggle locking devices allow MCCB's to be locked ON or OFF using up to three padlocks. Locking devices for 160A and 250A frame models accept padlocks with a 5mm hasp diameter.

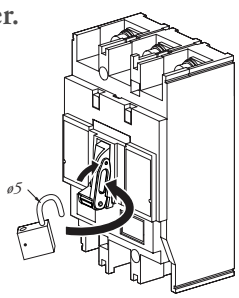

Key Fitting Facility (optional)

Key fitting facility is available for Castell FS1. Contact us for the details of mounting dimensions.

ACCESSORIES

TEMBREAK 2 LITE MCCBs AND SWITCH DISCONNECTORS

Insulation Accessories

Terminal Covers for Front Connection (CF)

Terminal covers for front connection are suitable for covering the exposed live parts of conductors terminated on the MCCB.

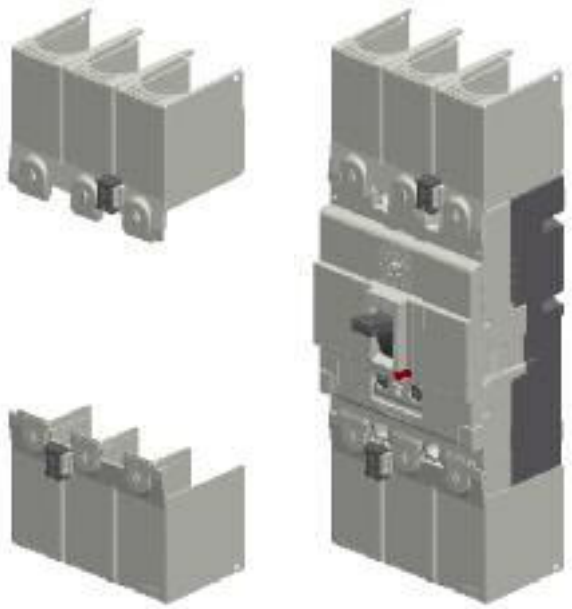

Terminal Cover for Front Connection

Flush Terminal Covers (CS)

Flush Terminal Covers (CS)

Flush terminal covers are available for 250A frame models with CS terminal covers front or cable clamp (FW) connection increase the ingress protection rating at the terminals without increasing the overall length. They can be used with busbar and for direct entry of stranded cable.

Terminal covers for Rear Connection (CR)

Terminal Cover for Rear Connection

Terminal covers for rear connection are available for 160A to 250A frame models and may be used on MCCBs fitted with rear connections (RC). They prevent access to the terminals from the front and top.

Terminal Cover Lock Option is available to lock and seal CF, CS and CR cover on to MCCB.

TEMBREAK 2 LITE MCCBs AND SWITCH DISCONNECTORS

Insulation Accessories

Interpole Barriers (BA)

Interpole barriers provide maximum insulation between phases at the terminals of the MCCB. They cannot be fitted at the same time as any of the terminal covers. Interpole barriers for use on one end of the MCCB are supplied as standard.

MCCB fitted with Interpole Barriers at both ends

Additional interpole barriers can be ordered individually. All interpole barriers can easily be fitted to either end of an MCCB.

ACCESSORIES

TEMBREAK MCCBs AND SWITCH DISCONNECTORS

Electrical Control Using Internally Mounted Accessories

Operation of AX and AL

An auxiliary switch electrically indicates the ON or OFF status of the MCCB.

An alarm switch electrically indicates the TRIP status of the MCCB.

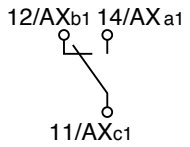

AX Terminal Designations

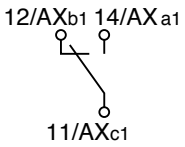

AL Terminal Designations

Operation of AX and AL

Switch	Breaker status	[ON]	[OFF]	[TRIP]
Auxiliary switch (AX) status		11/AXc-14/AXa “Closed” 11/AXc-12/AXb “Open”	11/AXc-14/AXa “Open” 11/AXc-12/AXb “Closed”	11/AXc-14/AXa “Open” 11/AXc-12/AXb “Closed”
Alarm switch (AL) status		91/ALc-94/ALa “Open” 91/ALc-92/ALb “Closed”	91/ALc-94/ALa “Open” 91/ALc-92/ALb “Closed”	91/ALc-94/ALa “Closed” 91/ALc-92/ALb “Open”

Ratings of Auxiliary and Alarm (AX/AL)

Auxiliary and Alarm Switch Ratings

MCCB Model	General Current							For microload		
	AC (V)			DC (V)			Minimum load	DC (V)		Minimum load
	Voltage (V)	Ampres (A)		Voltage (V)	Ampres (A)			(V)	(A)	
		Resistive load	Inductive load		Resistive load	Inductive load		Minimum load	Resistive load	
XS1250ND, XS1600ND	480	3	2	250	0.3	0.3	DC5V 160mA DC30V 26.7mA	30	0.1	DC5V 1mA DC30V 1mA
XS2000ND, XS2500ND	250	5	5	125	0.6	0.6				
	125	5	5	5	5	4				

TEMBREAK MCCBs AND SWITCH DISCONNECTORS

Electrical Control Using Internally Mounted Accessories

Remote Tripping Devices

Shunt Trip (SHT)

A shunt trip allows an MCCB to be tripped remotely on the application of the rated coil voltage across the shunt trip terminals. The MCCB contacts and toggle will move to the tripped position when the shunt trip is operated.

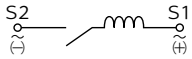

Note: Shunt trip is provided with anti-burn switch

The permissible voltage range is 85% to 110% for AC or 75% to 125% for DC.

Ratings of Shunt Trips

MCCB Model	Excitation Current (A)					
	Voltage AC		Voltage DC			
	100-115	200-480	24	48	100-115	200-230
XS1250ND, XS 1600ND XS2000ND, XS2500ND	1.1	0.93	2.52	1.55	0.67	0.35

Under Voltage Trip (UVT)

An undervoltage trip will automatically trip the circuit breaker when the voltage applied to its coil falls below a pre-set value. Remote tripping of the breaker is also possible.

Tripping voltage is 35% 70% of the rated voltage.
Resettable voltage is 85% or less, of the rated voltage.

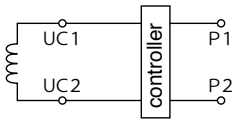

Note: The UVT controller is installed externally, when provided with AC UVT.

Ratings of Undervoltage Trips

MCCB Model	Power Supply Capacity (VA)			Excitation Current (mA)		
	AC (V)			DC (V)		
	100-120	200-240	380-450	24	100-115	200-240
XS1250-ND, XS 1600ND XS2000-ND, XS2500ND	5	5	5	22.7	6.0	-

ACCESSORIES

TEMBREAK MCCBs AND SWITCH DISCONNECTORS

Electrical Control Using Internally Mounted Accessories

Valid Maximum Accessory Combination

Frame size (A)	1250 and 1600A	2000 and 2500A
	XS1250ND XS1600ND	XS2000ND XS2500ND
AX AL SH	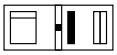	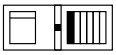
AX AL UV	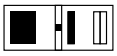	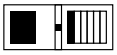

Auxiliary Switch

Alarm Switch

Shunt Trip

Undervoltage Trip

TEMBREAK MCCBs AND SWITCH DISCONNECTORS

Termination of Control Wiring

The LTF terminal block facilitates convenient and accessible control wiring to internally mounted accessories by allowing the use of control wiring cables with larger cross-sectional area than permitted by the internal accessories.

Mounting Position and Standard Terminal Arrangement for 1250 to 1600A MCCB (LTF)

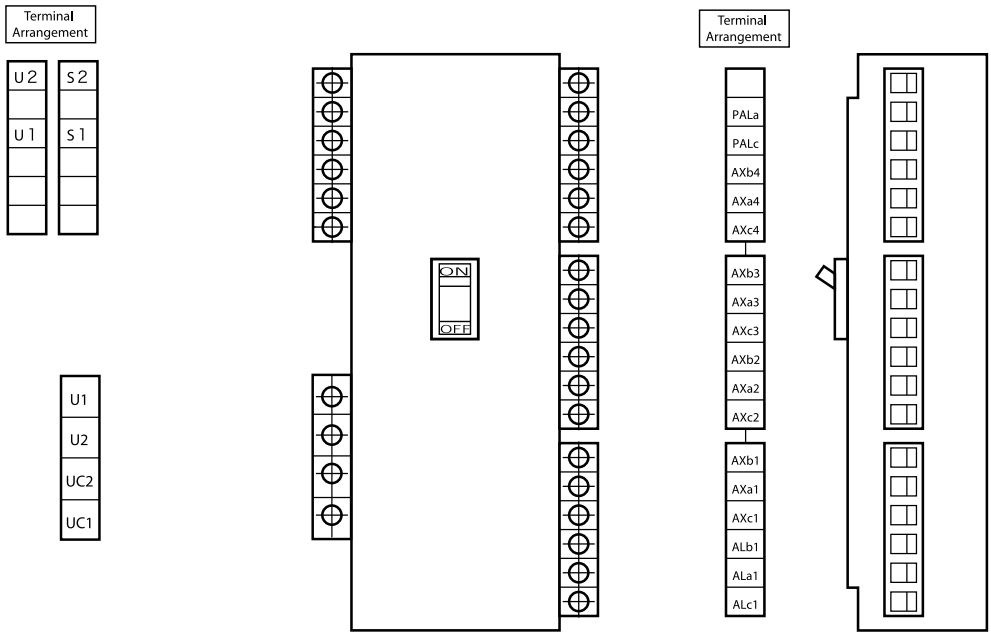

Mounting Position and Standard Terminal Arrangement for 2000 to 2500A MCCB (LTF)

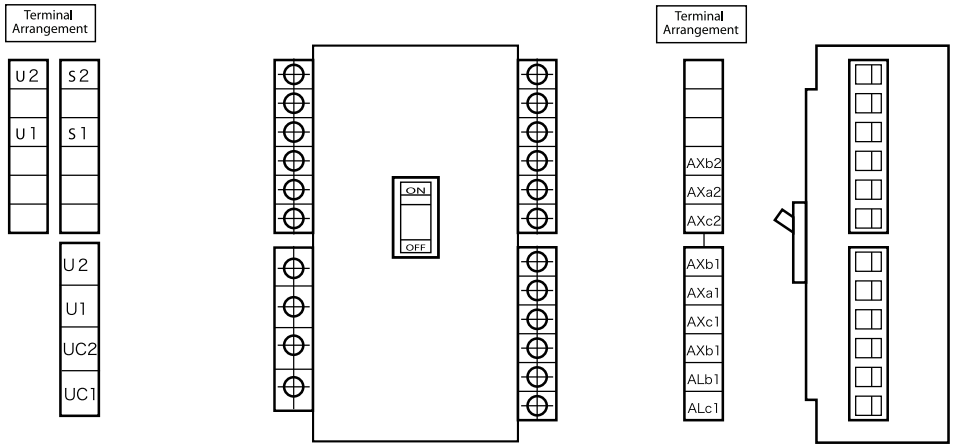

ACCESSORIES

TEMBREAK MCCBs AND SWITCH DISCONNECTORS

Electrical Control Using Motorised Operation 1250A and 1600A

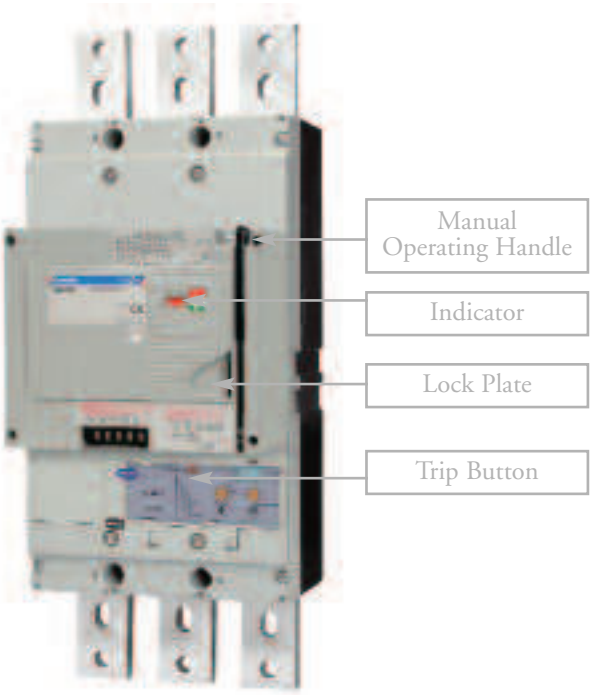

Type 1250, 1600A, Motor Operator

Positive Contact Indication

- Colour coding indicates the true position of the contacts clearly: ON (red), OFF (green), TRIP (white).

Easy Maintenance

- Breaker mounting, removal, and even setting changes can be done without removing the motor operator.

Manual ON/OFF Operation with One Stroke

Fast Closing Operation

- Closing in 60ms or less. The closing time remains constant over repeated operations.

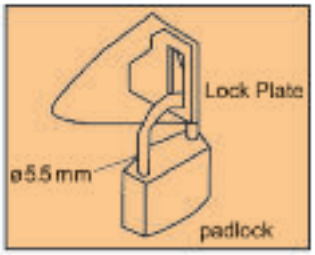

The breaker can be padlocked in the "OFF" position by pulling out the lock plate, and locking it with a padlock.
When the breaker is "ON", the lock plate cannot be pulled out.
Up to three lock can be used.
Padlock not supplied.

Ratings and Specifications

Type of Motor Operators			XMD 9
Applicable MCCB			XS1250 - ND
			XS1600 - ND
Rated Operating Voltage (V)	AC	100-115V 50/60Hz	■
		200-230V 50/60Hz	■
	DC	100-110V	■
		24V	■
Lock in "OFF" position (standard)			■
Manual Trip Button			✻
Steady-state r.m.s. Amp/inrush Amp (A)	AC100-115V	ON①	–/3.1
		OFF, RESET①	1.8/6.0
	AC200-230V	ON②	–/1.2
		OFF, RESET②	1.0/3.2
	DC100-110V	ON③	–/0.8
		OFF, RESET③	1.1/4.2
	DC24V	ON	–/4.5
		OFF, RESET	4.0/12.0
Type of operation			Spring Charged
Operating Time(s)	ON (Maximum values)		0.06
	OFF, RESET④		3
Control Switch Ratings			250V, 5A
Power Source Capacity (VA)			300VA
Dielectric withstand voltage The value in brackets for 24V DC			AC1500V (AC500V)
Weight (kg)			6.4

■ = Available
✻ Trip button on breaker to be used (accessible with motor fitted)

NOTE
① Maximum values at AC115V, 50Hz
② Maximum values at AC230V, 50Hz
③ Maximum values at DC110V
④ Maximum values at the rated operating voltages

TEMBREAK MCCBs AND SWITCH DISCONNECTORS

Electrical Control Using Motorised Operation 1250A and 1600A

Motorised Operation

ON CONTROL

When the ON switch is closed, the latch release coil (LRC) is excited and the closing spring is released. The breaker quickly closes and goes into ON status. When the closing spring is released the limit switch (LS) is opened and the LRC is de-excited.

OFF CONTROL

When the off switch is closed, self-hold control relay (Y) is activated and motor (M) operates to charge the closing spring. The breaker changes to OFF status.

RESET CONTROL

When the breaker is in TRIP status, closing the OFF switch activates self-hold control relay (Y) and starts motor (M). Motor (M) charges the closing spring and resets the breaker.

Manual Operation

ON, OFF (RESET)

The breaker can be opened (OFF or RESET) and closed (ON) alternately by pulling the operating lever down in one full stroke. ON/OFF operation of the breaker is possible without charging or releasing the closing spring.

EMERGENCY TRIP

Opening the breaker (OFF) using the motor operator takes up to 3 seconds. If a remote emergency OFF function is necessary, incorporate the shunt trip device (SHT) or the undervoltage trip device (UVT) into the breaker.

PRECAUTIONS REGARDING USAGE

- If using the UVT option, be sure to reset the UVT before closing the breaker
- The motor operator must be supplied with voltage within the following range:

  DC: 75-110% of rated voltage
  AC: 85-100% of rated voltage
  Operation at low voltage may burn out the motor.

Anti-pumping Function

When the breaker is turned ON and the closing spring is released, self-hold control relay X is active. Xa-contact is held closed, and Xb-contact is opened. While the ON switch is closed, latch release coil (LRC) will not be excited even if the OFF switch is closed or an automatic reset circuit is being used. Pumping is thus prevented.

Automatic Charge/ discharge Function

If the breaker is closed manually (ON) while the power source is on, the handle switch (HS) induces automatic release of the closing spring. Likewise, if the breaker is opened manually (OFF), the springs are automatically charged. If the breaker is opened or closed while the power source is off, later when the power source is turned on, the closing spring will automatically be charged or discharged to match the ON/OFF status of the breaker. This automatic charge/discharge function is necessary to prepare the closing mechanism for the next ON/OFF operation.
The sound of the charging or discharging of the spring should not be mistaken for a malfunction.

TEMBREAK MCCBs AND SWITCH DISCONNECTORS

Electrical Control Using Motorised Operation 1250A and 1600A

Automatic Reset

An alarm switch (a-contact) fitted in the breaker, can be used to induce recharging of the closing spring and automatically reset the MCCB. Connect the automatic reset circuit as shown below.

If the alarm switch is used, a pulse signal will be produced in the automatic reset circuit when the alarm is activated. Be sure to use a self-hold circuit to avoid possible problems caused by this pulse signal.

It is recommended that a time delay of approximately 3 minutes is introduced to the automatic reset circuit for thermal magnetic MCCB's In the event of an overload trip this will prevent the motor operators repeatedly driving the MCCB between the tripped and reset positions while the thermal element is hot.

If an alarm signal is also required for external control, use a 2 alarm switch combination.

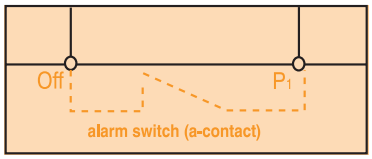

Connected Circuit AC and DC

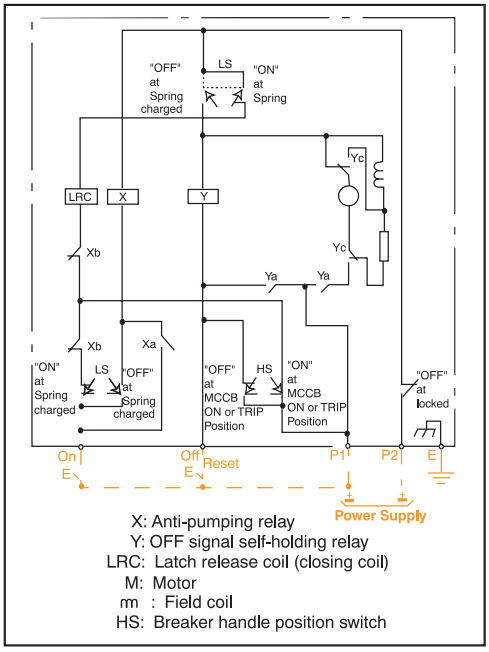

Note: Customer wiring shown in orange.

TEMBREAK MCCBs AND SWITCH DISCONNECTORS

Electrical Control Using Motorised Operation 2000A and 2500A

Motor Driven Type

Reference Notes

(1) Permissible operating voltage range as Follows:
AC rated, 85% to 110% of the rated voltage
DC rated, 85% to 110% of the rated voltage
Note: AC rated operating voltage 380V or 400-460V a power transformer is available (optional).

(2) Requires breaker's auxiliary switch (1b contact). This will be wired at the factory (on request) when the breaker/motor operator assemblies are ordered. However, when all the auxiliary switch contacts are specified for other purposes, an external auxiliary relay (not supplied) is required to be controlled by the auxiliary a-contact of the breaker and use the relay's normally closed contact (b-contact) for automatic reset.

(3) Time values at the rated operating voltage. Allow a longer time for the motor operator to complete the operation, at lower operating voltage.

(4) The motor operator is of a short time duty. Do not subject it to more than 10 continuous ON-OFF operations. If this occurs, allow the motor operator to cool for at least 15 minutes.

(5) Maximum values at 110V AC

(6) Maximum values at 220V AC

(7) Special specification, available on request

Ratings and Specifications

Type of Motor Operators				XMB 10
Applicable breakers				XS2000-ND
				XS2000-ND
Operating Voltage (V)	(1)	AC 100-110V 50/60Hz		
		AC 200-230V 50/60Hz		
		DC 100-110V		
Automatic Reset	(2)			
Steady-state r.ms. (A)		AC 100-110V 50/60Hz	(5)	0.85/3.5
Amp/inrush Amp (A)		AC 200-230V 50/60Hz	(6)	1.3/2.1
		DC 100V	(7)	1.1/2.5
		DC 110V	(7)	1.2/3.0
Type				Motor Driven
Operating Time(s)		ON (Maximum values) 0.06		2.0
(3) (4)		OFF/RESET		1.6
Control Switch Rating				250, 5A
Power Source Capacity (VA)				300
Dielectric Withstand Voltage				AC1000V
Weight (kg)				16

ACCESSORIES

TEMBREAK MCCBs AND SWITCH DISCONNECTORS

Electrical Control Using Motorised Operation 2000A and 2500A

Motor operation
'ON' control

Operating the ON switch energises the relay (X) via the motor switch 2-3 (closed). This in turn energises the motor, which turns the breaker ON. When the breaker is ON, the motor switch is thrown to the other side resulting in the relay (X) de-energising and stopping the motor.

'OFF' control

Operating the OFF/RESET Switch energises the relay (Y) via the motor switch 1-2 (closed). This in turn energises the motor which turns the breaker OFF. When the breaker is OFF the motor switch is thrown to the other side resulting in the relay (Y) de-energising and stopping the motor.

"RESET" control

Operate the OFF/RESET Switch to reset the tripped breaker. Circuit operation is the same for the OFF Control procedures.

Automatic reset (Optional)

The automatic reset feature can be incorporated by connecting the breaker's auxiliary switch contact (b-contact) in parallel with the OFF/RESET control switch.

Manual operation

Position the manual handle (supplied with motor operator) onto the motor operator shaft. Turn the handle anti-clockwise to turn the breaker OFF or RESET. During manual operation (by handle) the motor operator shaft is disengaged from the mechanism. Removing the handle automatically engages the shaft with the motor operator mechanism.

Handle switch

With the addition of a handle switch, the motor operator mechanism can be automatically brought to the manually operated position (ON or OFF) on removal of the handle, providing that the motor operator is powered up.

CAUTIONARY NOTES

1) When the breaker is ON and is then tripped, the ON/OFF indicator on the motor operator will indicate ON until the breaker is reset.

Note: The breaker's condition may differ.

2) If the motor operator is turned ON with the breaker OFF and the UVT de-energised, apply the power and complete one ON-OFF operation. (The breaker cannot be turned ON). Then complete one ON operation again (The breaker can be turned ON)

3) Allow several minutes to cool when a thermal-magnetic breaker is tripped by a thermal overload trip, then reset the breaker.

Control Circuit for Motor Driven Type

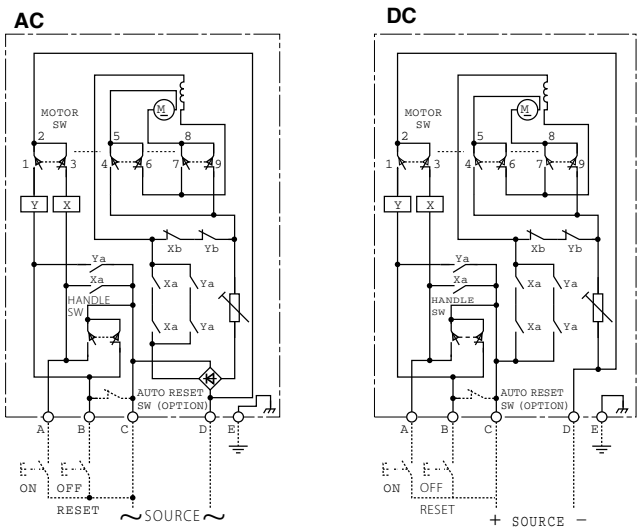

TEMBREAK MCCBs AND SWITCH DISCONNECTORS

Operating Handles & Locking Devices

Door Mounted Handle (HS) Standard Type for 1250A and 1600A MCCB

The door mounted handle allows breakers installed in control centers or switchboards to be manually operated from outside and complies with IEC 60204-1. HS style handles are available for 1250 and 1600A models only. It consists of an operating mechanism that is mounted on the breaker, an operating handle that is mounted on the door, and a shaft that transmits the turning force from the handle to the operating unit.
The shaft can be cut to the required length.
The shaft support makes easy to insert to the operating handle when the panel door is being closed.

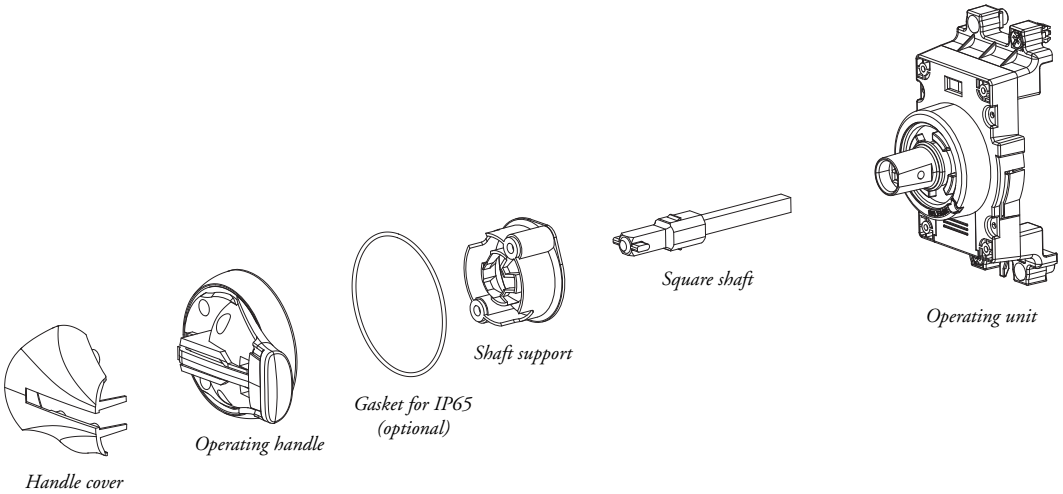

Door Interlock Mechanism

The external operating handle keeps the panel door locked when in the ON position.
There is OFF open type only.

OFF open type

The handle is turned to the OFF position to open the panel door.

• Door interlock release button

The release button enables the panel door to be opened with the handle in the ON position.
To release: push the release button on the side of the operating handle with a flat-bladed screwdriver.

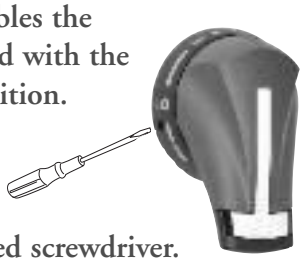

Toggle Lock Mechanism

• Padlock (Standard)
This mechanism allows the breaker to be padlocked in the OFF position.
Padlocks are not supplied.
Up to three padlocks can be installed.

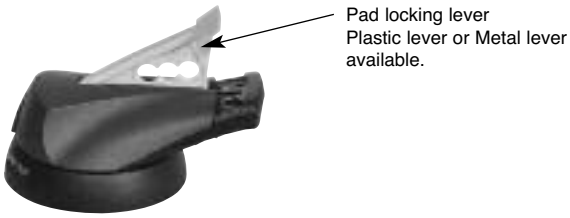

ACCESSORIES

TEMBREAK MCCBs AND SWITCH DISCONNECTORS

Operating Handles & Locking Devices

Breaker Mounted Handle for 1250A and 1600A MCCB (HB)

Breaker Mounted Handle

This external operating handle is used to operate a circuit breaker mounted just behind a compartment door with the door closed. The operating unit and the handle itself are mounted directly onto the circuit breaker. The handle protrudes through a cutout in the door. A moulded door flange is supplied with the external operating handle which covers the cutout from the front.

Padlocking is possible in the OFF position.

Fittings for Castell locks are available. They are suitable for use on door mounted handles (HS) for MCCBs.

Operating Handle for 2000A and 2500A MCCB, Panel Mounted Type XFE10

ON
Turn the handle clockwise to the ON position on the indication plate.
OFF
Turn the handle anti-clockwise to the OFF position on the indication plate.
RESET
When the breaker trips the handle indicates tripped
Turn the handle anti-clockwise to the
RESET position. This will reset the breaker

OPENING THE PANEL
Turn the handle anti-clockwise to OPEN DOOR.
The lock is released and the panel door
can be opened.

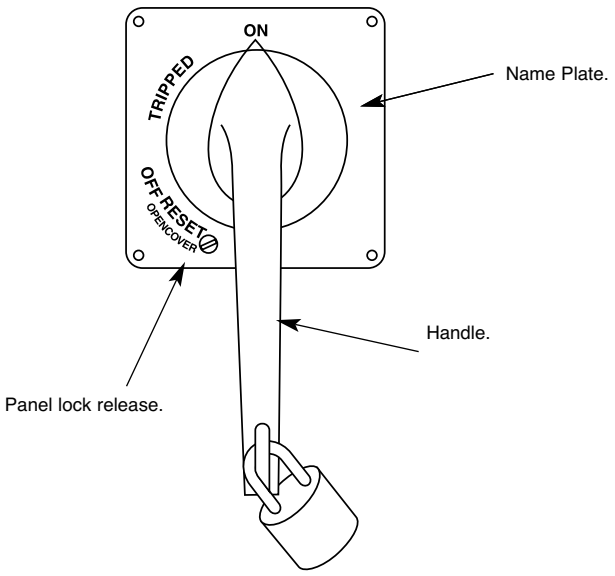

Locking Devices

Toggle locking devices allow MCCBs to be locked ON or OFF using up to three padlocks. Locking devices for 1250A to 1600A frame models accept padlocks with 8mm hasp diameter.

TEMBREAK MCCBs AND SWITCH DISCONNECTORS

Operating Handles & Locking Devices

Handle Extension for 1250 - 2500 A MCCB's (XHA)

Handle extensions assist manual opening and closing operations for large frame MCCBs.
Handle extensions are supplied as standard on DC breakers rated 1250A and above.

XHA9B (1250A ~ 1600A)

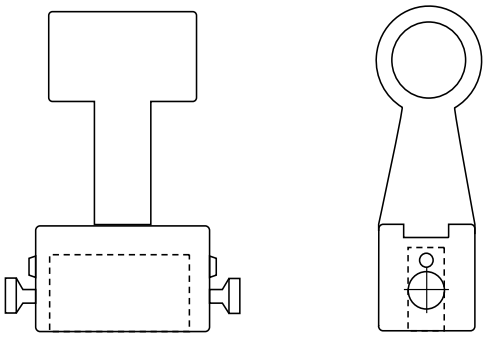

XHA10 (2000 ~ 2500A)

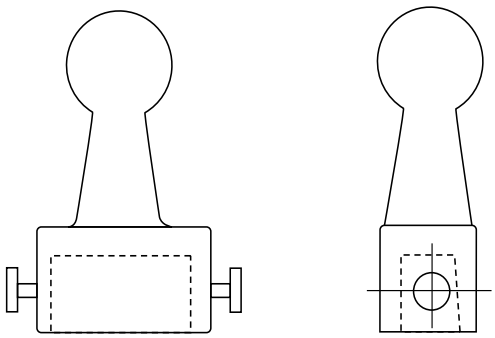

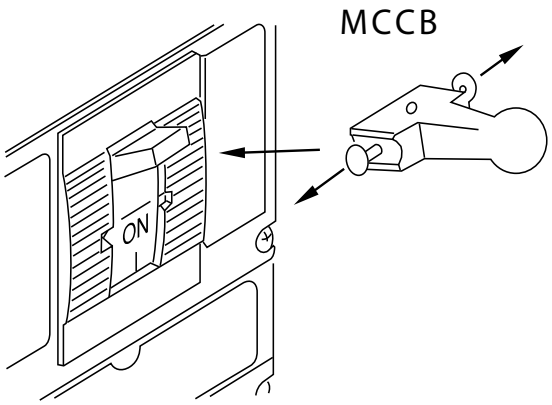

ACCESSORIES

TEMBREAK 2 MCCBs AND SWITCH DISCONNECTORS

Insulation Accessorises

Terminal Covers for 1250A MCCB

Terminal covers are used to prevent direct contact with live MCCB terminations. They also provide additional insulation to reduce the possibility of a short circuit between phases or to earth when large conductors are used.

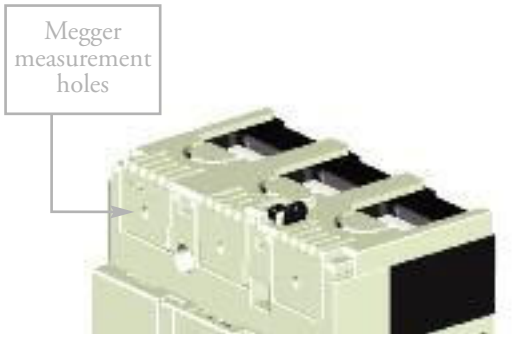

1250AF Terminal Cover

General features

- Terminal covers for 1250A frame models have an IP20 ingress protection rating
- Terminal covers are ordered individually. Two terminal covers are required to cover both the line and load terminals of an MCCB. Each cover can either be fitted to the top or bottom of the MCCB
- Terminal covers have a megger measurement hole of 4mm diameter on each phase.

TEMBREAK 2 MCCBs AND SWITCH DISCONNECTORS

Insulation Accessories

Interpole Barriers for 1250A and 1600A MCCB (BA)

Interpole barriers provide maximum insulation between phases at the terminals of the MCCB. They cannot be fitted at the same time as any of the terminal covers. Interpole barriers for use on one end of the MCCB are supplied as standard. Additional interpole barriers can be ordered individually. All interpole barriers can easily be fitted to either end of an MCCB.

MCCB moulds have been designed to accept an additional interpole barrier between two adjacent MCCBs.

MCCB Fitted with Interpole Barriers on Both Ends

CONTENTS

TEMBREAK 2 & TEMBREAK

MCCBs FROM 12A TO 3200A • MCCBs FOR 1000V AC
MCCBs FOR 1000V DC • MCCBs WITH INTEGRAL RCD
SWITCH DISCONNECTORS • MEASUREMENT AND DATA COMMUNICATION

RATINGS AND SPECIFICATIONS	SECTION 1
PROTECTION CHARACTERISTICS	SECTION 2
APPLICATION DATA	SECTION 3
ACCESSORIES	SECTION 4
INSTALLATION	SECTION 5
DIMENSIONS	SECTION 6
ORDER CODES	SECTION 7

INSTALLATION

Frame Reference	TB2 Lite 160	TB2 Lite 250	TB2 125	TB2 S250	TB2 S/H/L 250	TB2 H/L 400	TB2 E/S 630
Max. In (A) of Frame	160	250	125	250	250	400	630
TEMBREAK 2 MOULDED CASE CIRCUIT BREAKERS 400 AC			S125-NJ S125-GJ	S160-NJ S160-GJ S250-NJ S250-GJ	H125-NJ L125-NJ H160-NJ L160-NJ H250-NJ L250-NJ S250-NE S250-GE S250-PE H250-NE	H400-NE L400-NE	E400-NJ S400-CJ S400-NJ S400-GJ S400-PJ S400-NE S400-GE S400-PE S630-CE E630-NE S630-NE S630-GE
TEMBREAK 2 CIRCUIT BREAKERS WITH Icu = 70KA AT 690V Ac					L125-PJ	L400-PE	
TEMBREAK 2 CIRCUIT BREAKERS FOR 1000V Ac			VS125-NJ	VS250-NJ			XV400-NE①②
TEMBREAK 2 LITE SPACE SAVING, MONEY SAVING MOULDED CASE CIRCUIT BREAKERS	E160-SF S160-SCF S160-SF E160-SJ S160-SCJ S160-SJ	E250-SCF E250-SF S250-SFF E250-SCJ E250-SJ S250-SJ					
TEMBREAK 2 CIRCUIT BREAKERS WITH INTEGRAL RESIDUAL CURRENT PROTECTION (CBR)			ZE125-NJ ZS125-NJ ZS125-GJ	ZE250-NJ ZS250-NJ ZS250-GJ			
CIRCUIT BREAKERS AND SWITCH-DISCONNECTORS FOR USE ABOVE 250V DC	S160-SD S160-GD S160-SDN	S250-SD S250-GD S250-SDN		PVS160-SDL② PVS160-SDH② PVS160-SNL② PVS160-SNH② PVS250-SDL② PVS250-SDH② PVS250-SNL② PVS250-SNH②		PVS400-NDL PVS400-NDH	S400-ND
SWITCH DISCONNECTORS	S160-SN	S250-SN	S125-NN	S250-NN			S400-NN

	TB2 H/L 800	TB2 1000	TB2 1250	TB2 1600	TB 3200
	800	1000	1250	1600	3200
	H800-NE	S800-CJ S800-NJ S800-RJ S800-NE S800-RE S1000-SE	S1250-SE S1250-NE S1250-GE	S1600-NE S1600-SE	XS2000-NE①② XS2600-NE①② XS3200-NE①②
	L800-NE L800-PE	S1000-NE XV630PE①② XV800PE①②	XV1250NE①②		
	PVS800-NDL PVS800-NDH	S800-ND S1000-ND	XS1250ND①②	XS1600ND①②	XS2000-ND①② XS2500-ND①② XS3200-ND①②
		S800-NN	S1250-NN	S1600-NN	XS2000-NN①② XS2500-NN①② XS2500-NN①②

CONTENTS | SECTION 5

TEMBREAK 2 MCCBS AND SWITCH DISCONNECTORS
- Connection and Mounting
- Insulation Distances
- Mounting Angle
- Direction of Power Supply
- Standard Installation Environment and Special Treatments
- Temperature Ratings

Pages 189 - 199

TEMBREAK 2 LITE MOULDED CASE CIRCUIT BREAKERS AND SWITCH DISCONNECTORS
- Connection and Mounting
- Insulation Distances
- Mounting Angle
- Direction of Power Supply
- Standard Installation Environment and Special Treatments
- Temperature Ratings

Pages 200 - 205

MOULDED CASE CIRCUIT BREAKERS AND SWITCH DISCONNECTORS FOR USE ABOVE 250V DC
- Cable Connection for DC Circuits
- Insulation Distances
- Standard Installation Environment and Special Treatments
- Temperature Ratings

Pages 206 - 221

①Tembreak 1. Frame sizes vary from Tembreak 2.
②Contact Terasaki for installation details.

INSTALLATION

TEMBREAK 2 MCCBs AND SWITCH DISCONNECTORS

Connection and Mounting

TemBreak 2 MCCBs connection and mounting accessories facilitate easy installation in any arrangement. Breakers and accessories are easy to fit. They are designed to provide safe and secure termination and mounting points. 125A and 160A/250A frame models have a 45mm front cutout.

45mm Cutout Patterns

Connection and mounting options overview diagram

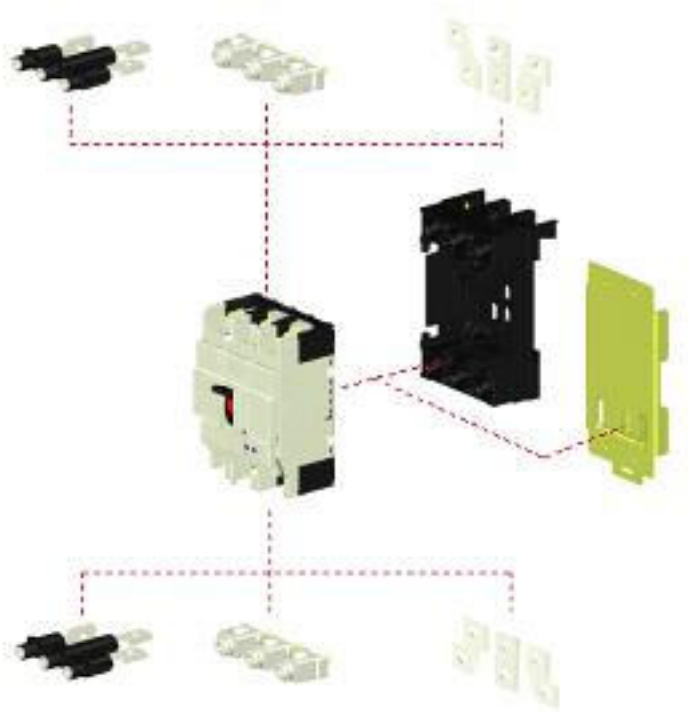

Overview of Connection and Mounting Accessories

Please refer to Section, 1 Ratings and Specifications, for details of the connection and mounting options which are available for each model.

Please refer to Section, 6 Dimensions, for detailed dimensions of connection and mounting options and accessories.

Note that one set of mounting screws is supplied as standard with every circuit breaker or switch disconnector purchased.

TEMBREAK 2 MCCBs AND SWITCH DISCONNECTORS

Connection and Mounting

Connection of Busbars and Terminated Cables

This connection method is standard for all **front connected** (FC) MCCB models. Solid conductors or cables terminated with crimp lug terminals can be used.

Serrated Terminal Surface

Each terminal on 160A and 250A models has a serrated surface. This provides excellent grip for heavy cables terminated with crimp lug terminals, thereby preventing sideways rotation of the lug.

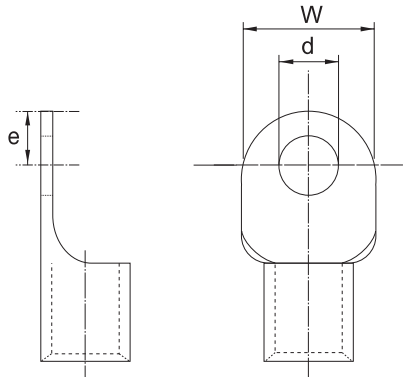

Maximum Dimensions of Compression Terminals			
Frame Size (A)	125*	160 & 250	400 & 630
Width, W (mm)	17	25	25
Diameter, d (mm)	9	9	11
Maximum from centre to tip, dim e (mm)	8.5	10	12

Connection of Large Conductors and Multiple Conductors

Extension bars (FB) are terminal extensions which can be fitted to line or load side terminals and are used to connect large conductors and multiple conductors. Available for field fitting in sets of 3 or 4 bars.

*H125 and L125 are 250A frame size

INSTALLATION

TEMBREAK 2 MCCBs AND SWITCH DISCONNECTORS

Connection and Mounting

Direct Entry of Stranded Cable

Cable clamp terminals (FW) can be used to secure stranded cable directly to the MCCB. Available for field fitting in sets of 3 or 4.

MCCB Model	Cable Capacity (mm^2)
S125, VS125, ZE125, ZS125	1.5 to 50 (1 cable)
H125, L125	1.5 to 70 (1 cable)
S160, PVS160, S250, H250, L250, VS250, ZE250, ZS250	35 to 120 (1 cable)
E400, S400, H400, L400	80 to 240 (1 cable)
	60 to 120 (2 cables)

Termination in Separate Compartment

Rear connections (RC) allow termination of conductors in a different switchboard compartment to the MCCB body.

The stud can be rotated in steps of 45 degrees on a 125A to 630A frame MCCBs and 90 degrees on a 800A frame MCCBs in the field.

TEMBREAK 2 MCCBs AND SWITCH DISCONNECTORS

Connection and Mounting

Plug-in Mounting

The plug in mounting system allows fast replacement of the MCCB body without the need to disturb the terminations. Solid conductors or cables terminated with compression terminals can be used.

Plug-In Safety Lock

The plug-in MCCB body is **automatically locked to the base** when the contacts are closed (toggle ON). It cannot be removed unless the contacts are in the isolated position (toggle OFF or TRIPPED). This system ensures safe removal of the MCCB from the base. Plug-in safety lock is available from 125A to 800A frame models.

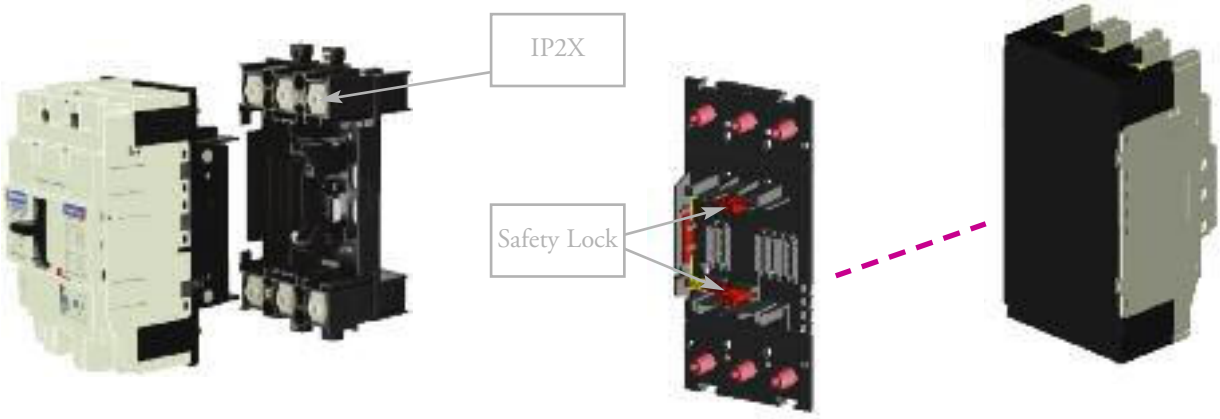

Plug-in MCCB and base

Plug-in connections and safety lock are fitted to the back of the MCCB

The connection bars for plug-in bases are optional and can be configured in the field either for front or rear access. The illustrations below show possible mounting and connection options for plug in bases. These mounting and connection options are available from 125A to 800A frame models.

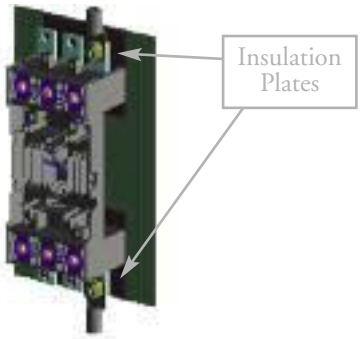

1. Mounted on base plate with connection bars mounted for front access.
   Insulation plates are supplied as standard and must be fitted.

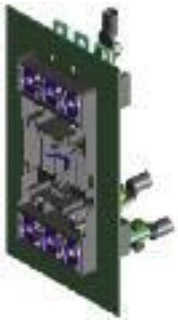

2. Terminations in separate compartment. Connection bars are mounted for top access at the top and rear access at the bottom.

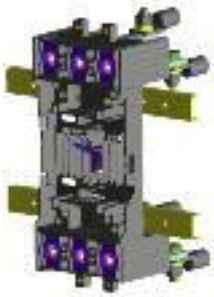

3. Mounted on angle bars. Connection bars are mounted for rear access.

Note: Plug-in mounting for 1250A frame model is available for only "Mounted on angle bars", and safety trip can be specified as option.

INSTALLATION

TEMBREAK 2 MCCBs AND SWITCH DISCONNECTORS

Connection and Mounting

Mounting on 25mm DIN Rail

The DIN rail adaptor is easily fitted to the rear of 3 pole S125 and S250 models to allow clip mounting of the MCCB to 35mm DIN rail.

The 45mm cutout of TemBreak 2 devices makes them suitable for mounting alongside modular devices in distribution boards.

Door Flanges

A range of flanges which improves the appearance of door cutouts is available. These are suitable for toggle-operated and motor-operated MCCBs and switch-disconnectors.

TEMBREAK 2 MCCBs AND SWITCH DISCONNECTORS

Insulation Distances

The insulation distances between the MCCB and earthed metal parts and insulators shown in this section must be maintained to prevent arcing faults occurring due to conductive ionised gas. In cases where other specifications require different insulation distances to those shown here, the greater distance must be maintained. In cases where two different models are installed one above the other, the insulation distance between the two models should be as for the lower model.

ATTENTION

Exposed conductors must be insulated up to the breaker terminals. Interpole barriers or optional terminal covers are recommended. If optional terminal covers are used, insulate the exposed conductor until it overlaps the terminal cover.

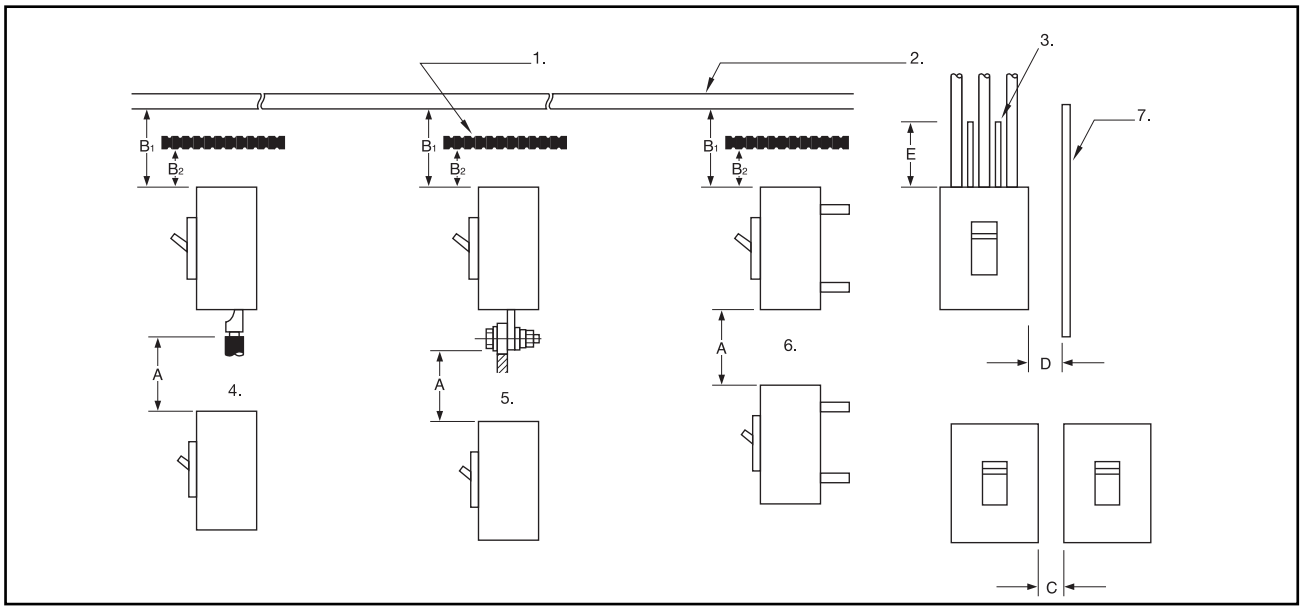

1. Insulation plate
2. Top plate (earthed metal)
3. Interpole barrier
4. Front-connected type
5. Front-connected type with extension bar
6. Rear-connected type, plug-in type
7. Side panel
8. **A.** Distance from lower breaker to exposed live part of upper breaker terminal (front-connected type) or distance from lower breaker to end face of upper breaker (rear-connected type or plug-in type)
   B1. Distance from end face of breaker to top plate
   B2. Distance from end face of breaker to insulation plate
   C. Gap between breakers
   D. Distance from side of breaker to side panel (earthed metal)
   E. Dimensions of insulation over exposed conductors

INSTALLATION

TEMBREAK 2 MCCBs AND SWITCH DISCONNECTORS

Insulation Distance in mm (At 690V AC Maximum) Note (5)

Model	Type	A	B1	B2	C (4)	D	E
S125	NJ	50	40(2)	10	0	25	*(1)
S125	GJ	75	45	25	0	25	*(1)
H125	NJ	100	80	60	0	50	*(1)
L125	NJ	100	80	60	0	50	*(1)
L125	PJ	120	120	80	0	50	*(1)
S160	NJ	50	40	30	0	25	*(1)
S160	GJ	100	80	60	0	50	*(1)
H160	NJ	100	80	60	0	50	*(1)
L160	NJ	100	80	60	0	50	*(1)
S250	NJ	50	40	30	0	25	*(1)
S250	NE	50	40	30	0	25	*(1)
S250	GJ	100	80	30	0	25	*(1)
S250	GE	100	80	30	0	25	*(1)
S250	PE	100	80	60	0	50	*(1)
H250	NJ	100	80	60	0	50	*(1)
H250	NE	100	80	60	0	50	*(1)
L250	NJ	100	80	60	0	50	*(1)
E400	NJ	100	80	40	0	30	*(1)
S400	CJ	100	80	40	0	30	*(1)
S400	NJ	100	80	40	0	30	*(1)
S400	GJ	100	80	40	0	30	*(1)
S400	GE	100	80	40	0	30	*(1)
S400	PJ	100	80	40	0	30	*(1)
S400	PE	100	80	40	0	30	*(1)
H400	NE	120	120	80	0	80	*(1)
L400	NE	120	120	80	0	80	*(1)
L400	PE	120	120	80	0	80	*(1)
E630	NE	120	100	80	0	80	*(1)
S630	CE	120	100	80	0	80	*(1)
S630	GE	120	100	80	0	80	*(1)
S800	CJ	120	100	80	0	80	*(1)
S800	NJ	120	100	80	0	80	*(1)
S800	NE	120	100	80	0	80	*(1)
S800	RJ	150	120	80	0	80	*(1)
S800	RE	150	120	80	0	80	*(1)
H800	NE	120(3)	120	80	0	80	*(1)
L800	NE	120(3)	120	80	0	80	*(1)
L800	PE	200(3)	200	160	0	100	*(1)
S1000	SE	150	120	80	0	80	*(1)
S1000	NE	150	120	80	0	80	*(1)
S1250	SE	150	120	80	0	80	*(1)
S1250	NE	150	120	80	0	80	*(1)
S1250	GE	150	150	100	0	100	*(1)
S1600	SE	150	150	100	0	100	*(1)
S1600	NE	150	150	100	0	100	*(1)

***Note:** (1) Insulate the exposed conductor until it overlaps the moulded case at the terminal, or the terminal cover.
(2) 10mm at 440V AC Maximum.
(3) Take care that arc gases are emitted to both line and load sides.
(4) If using extension bars (optional), ensure the insulation distance for the application.
(5) Contact Terasaki for model types VS125-NJ and VS250-NJ.

TEMBREAK 2 MCCBs AND SWITCH DISCONNECTORS

Mounting Angle

TemBreak 2 MCCBs may be mounted at any angle without affecting performance.

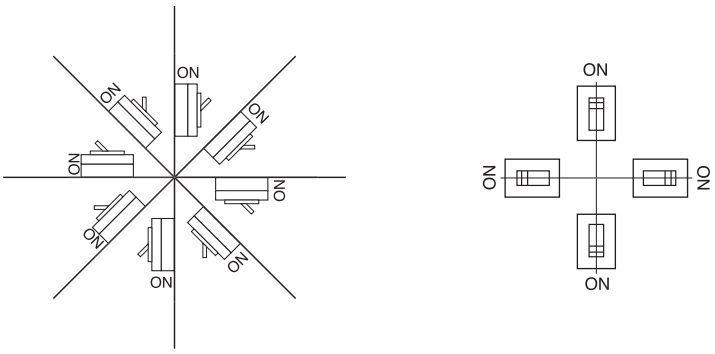

Mounting angle does not affect performance.

Direction of Power Supply

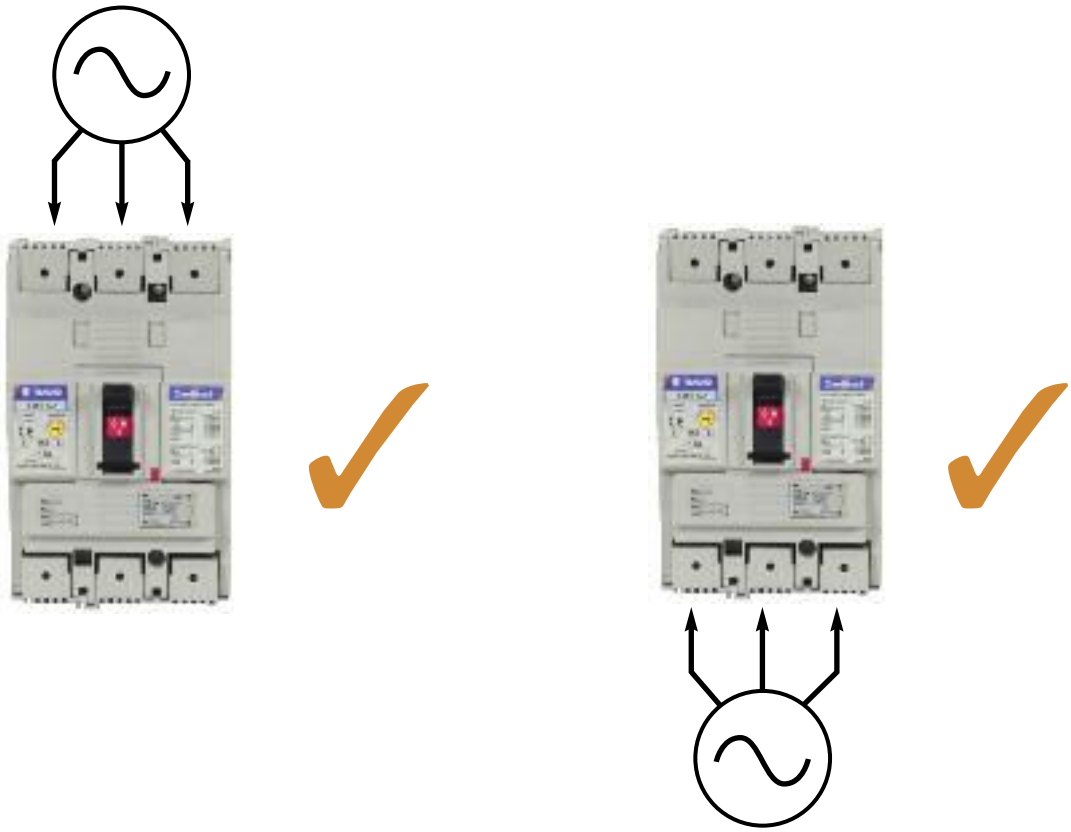

Power can be supplied through TemBreak 2 MCCBs in either direction without loss of performance.

INSTALLATION

TEMBREAK 2 MCCBs AND SWITCH DISCONNECTORS

Standard Installation Environment and Special Treatments

TemBreak 2 MCCBs are intended for installation in the following conditions as standard:

- Operating ambient temperature -10 degrees C to 50 degrees C. Refer to page 198, 199, 221 for thermal derating information above this temperature.
- Relative humidity of up to 85%.
- Altitude up to 2000m.
- Atmospheres free from dust, smoke, corrosive gases, inflammable gases, moisture and salt.

For installation in conditions more onerous than those described above, contact Terasaki for details.

The following special treatments have been developed for installation in specific environmental conditions:

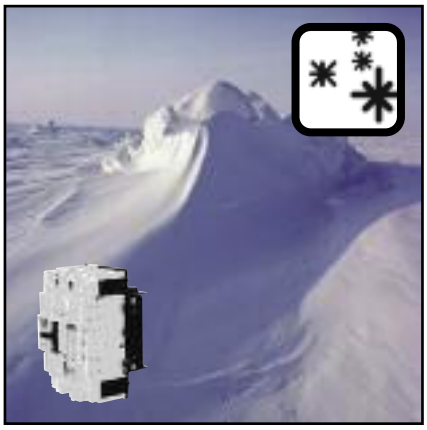

- Low temperature treatment. For installation at temperatures down to -40 degrees C for storage and -20 degrees C for operation. The environment must be free from rapid changes in temperature that result in the formation of condensation.

- Fungus-moisture proofing. For installation at temperatures up to 65 degrees C and relative humidity of up to 95%. The environment must be free from rapid changes in temperature.

- Anti-corrosion treatment. MCCB is surface treated to increase resistance to corrosion. If the MCCB is to be installed in atmosphere that contains excessive volumes of corrosive gases or moisture, it should be house in an airtight enclosure.

TEMBREAK 2 MCCBs AND SWITCH DISCONNECTORS

Temperature Ratings

Calibration Temperature: 50°C

MCCB Type	Connection Type	Rating at calibration temperature (50°C)	Rated Current (A)			
			50°C	55°C	60°C	65°C
S125-NJ S125-GJ	Front Rear Plug-in	20A	20	18.5	18	17.5
		32A	32	30.5	30	29
		50A	50	45	43	41
		63A	63	57	55	52
		100A	100	94	90	87
		125A	125	117	113	109
H125-NJ L125-NJ L125-PJ	Front Rear Plug-in	20A	20	18.5	18	17.5
		32A	32	30	29	28
		50A	50	47	45	44
		63A	63	59	57	55
		100A	100	95	92	89
		125A	125	118	114	111
S160-NJ	Front Rear, Plug-in	20A	20	18.5	18	17.5
		32A	32	30	29	28
S160-NJ S160-GJ	Front Rear Plug-in	50A	50	46	44	42
		63A	63	59	57	55
		100A	100	94	91	88
		125A	125	117	113	109
		160A	160	151	146	141
H160-NJ L160-NJ	Front Rear Plug-in	160A	160	151	147	143
S250-NJ S250-GJ	Front Rear	160A	160	151	146	141
		250A	250	235	227	219
H250-NJ L250-NJ	Front Rear Plug-in	160A	160	151	147	143
	Front Rear	250A	250	237	230	223
S400-CJ S400-NJ S400-GJ S400-PJ	Front Rear Plug-in	250A	250	237	230	223
		400A	400	380	369	358
S800-CJ S800-NJ S800-RJ	Front Rear Plug-in	630A	630	600.1	584.7	569.4
		800A	800	758.9	737.9	716.9

Calibration Temperature: 30°C

Models Calibrated at 30°C		Rating at calibration temperature (30°C)	30°C	40°C	50°C	55°C	60°C	65°C
H250-NJ L250-NJ	Plug-in	250A	250	236	219	209	200	190

INSTALLATION

TEMBREAK 2 MCCBs AND SWITCH DISCONNECTORS

Temperature Ratings

Electronic Models			Rated Current (A)					
		Rating	30°C	40°C	50°C	55°C	60°C	65°C
S250-NE S250-GE	Front Rear	250A	250	250	237.5	225	200	200
	Plug-in	250A	250	225	200	200	157.5	157.5
S250-PE H250-NE	Front Rear	250A	250	250	237.5	225	200	200
S400-NE	Front	250A	250	250	250	250	225	200
S400-GE S400-PE H400-NE L400-NE	Rear Plug-in	400A	400	400	400	380	360	320
L400-PE	Rear	250A	250	250	250	250	225	200
	Plug-in	250A	250	250	250	250	225	200
	Rear	400A	400	400	400	380	360	320
	Plug-in	400A	400	400	400	360	340	320
E630-NE S630-CE S630-GE	Front Rear	630A	630	630	630	598.5	567	504
E630-NE S630-CE S630-GE	Plug-in	630A	535.5	535.5	504	396.9	396.9	396.9
S800-NE S800-RE	Front Rear, Plug-in	630A	630	630	630	598.5	567	504
	Front	800A	800	800	800	720	640	504
	Rear, Plug-in	800A	800	800	760	720	640	504
H800-NE	Front	630A	630	630	630	598.5	567	504
L800-NE	Rear Plug-in	800A	800	800	720	640	504	504
L800-PE	Rear Plug-in	630A	630	630	630	598.5	567	504
	Rear Plug-in	800A	800	800	720	640	504	504
S1000-SE (1) S1000-SE (1)	Front Rear	1000A	1000	1000	900	800	630	630
S1250-SE (1)	Front	1250A	1250	1250	1250	1000	787	787
S1250-NE (1) S1250-GE (1)	Rear Plug-in	1250A	1250	1250	1125	1000	787	787
S1600-SE (1)	Front	1600A	1600	1600	1600	1440	1280	1008
S1600-NE (1)	Rear	1600A	1600	1600	1520	1440	1280	1008

Note (1.) Supplied with terminal bars fitted as standard. Temperature ratings are not valid if the terminal bars are removed.

TEMBREAK 2 LITE MOULDED CASE CIRCUIT BREAKERS AND SWITCH DISCONNECTORS

Connections and Mountings

Connecting types (Abbreviation)		Front-connected (FC)		Rear-connected (RC)	
	For compression terminals / flat bars	With extension bars	With cable clamps	Flat bar studs Stud can be turned 45° or 90°	Bolt studs
Outer view / Breaker					
E160-SF S160-SCF S160-SF	◉	○	—	○	—
E160-SJ S160-SCJ S160-SJ S160-SN	◉	○	○	○	—
E250-SCF E250-SF E250-SCJ S250-SF E250-SJ S250-SJ S250-SN	◉	○	○	○	—
	• Connect compression terminals or flat bars directly to breaker terminals.	• Extension bars are attached to breaker terminals. Connect compression terminals or flat bars to the extension bars.	• Cable clamps are attached to breaker terminals. Connect wires directly to cable clamps.	• Flat bar studs will be factory installed in the horizontal position unless otherwise specified. • For E250, S250, the flat bar studs in the vertical position are available on request. Please select a position code from those shown in the table below: • For S160, the studs are horizontal direction only.	

Position code	Position of flat bar studs	
	Line side	Load side
RC-A	Vertical	Horizontal
RC-B	Horizontal	Vertical
RC-C	Vertical	Vertical
RC-D	Horizontal	Horizontal

See page 171 terminal screw size and tightening torques.

Notes:
◉ : Standard. This configuration used unless otherwise specified.
○ : Optional standard. Specify when ordering.
— : "no" or "not available".

INSTALLATION

TEMBREAK 2 LITE MOULDED CASE CIRCUIT BREAKERS AND SWITCH DISCONNECTORS

Connections and Mountings

Bars For Front Connection

Number of poles	Applicable breakers		Min order qty	Constituent parts			Remarks
				Extension bar	Screw B	Screw C	
3	E160-SF, S160-SCF, S160-SF, E160-SJ, S160-SCJ, S160-SJ, S160-SN	Straight extension bars	1/2	3	3	3	
4			1	4	4	4	
3	E250-SCF, E250-SF, S250-SF, E250-SCJ, E250-SJ, S250-SJ, S250-SN	Spread extension bars	1/2	3	3	3	
4			1	4	4	4	
3	E250-SCF, E250-SF, S250-SF, E250-SCJ, E250-SJ, S250-SJ, S250-SN	Spread extension bars	1/2	3	3	3	
4			1	4	4	4	

NOTE ① Two sets are required per breaker one for the line side and one for the load side.

Rear Connection

Number of poles	Applicable breakers	Min order qty	Constituent parts			Remarks
			Stud bar	Screw D	Screw E	
3	E160-SF, S160-SCF, S160-SF, E160-SJ, S160-SCJ, S160-SJ, S160-SN	1/2	3	3	3	
4		1	4	4	4	
3	E250-SCF, E250-SF, S250-SF, E250-SCJ, E250-SJ, S250-SJ, S250-SN	1/2	3	3	3	
4		1	4	4	4	

NOTE ② The studs can be rotated to four angular positions. 0 (horizontal), 45, 90 (vertical) and 135 degrees.

Terminal Screws Sizes and Standard Torques

Connecting types / Type		Front connection (FC)			Rear connection (RC) (Flat Bar stud)	
		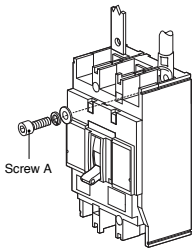	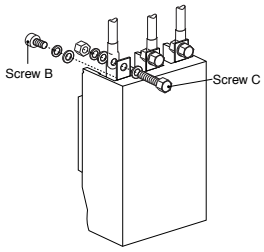		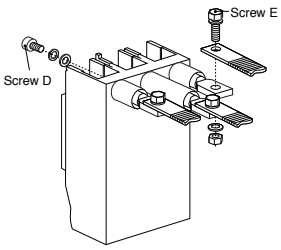	
Frame size (A)	Breaker	Compression terminal Screw size (A) Torque (N·m)	Extension bar Screw size (B) Torque (N·m)	Screw size (C) Torque (N·m)	Screw size (D) Torque (N·m)	Screw size (E) Torque (N·m)
160	E160-SF S160-SCF S160-SF E160-SJ S160-SCJ S160-SJ (16～50A)	Wire clamping M5x14 2.3～3.4	Wire clamping M5x14 2.3～3.4	Hex head M8x22 11.8～18.6	Pan head M5x14 2.3～2.8	Hex head M8x23 2.7～4.5
	E160-SF S160-SCF S160-SF E160-SJ S160-SCJ S160-SJ (63～160A)	Pan head M8x14 4.9～6.9	Pan head M8x14 4.9～6.9	Hex head M8x22 11.8～18.6	Hex socket head M6x18 7.8～11.8	Hex head M8x23 11.8～18.6
	S160-SN	Pan head M8x14 4.9～6.9	Pan head M8x14 4.9～6.9	Hex head M8x22 11.8～18.6	Hex socket head M6x18 7.8～11.8	Hex head M8x23 11.8～18.6
250	E250-SCF E250-SF S250-SF E250-SCJ E250-SJ S250-SJ S250-SN	Hex socket head M8x18 7.8～12.7	Hex socket head M8x18 7.8～12.7	Hex head M10x25 22.5～37.2	Hex socket head M6x18 7.8～11.8	Hex head M8x25 11.8～18.6

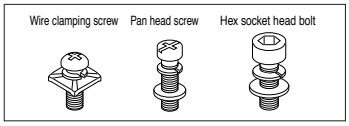

TEMBREAK 2 LITE MOULDED CASE CIRCUIT BREAKERS AND SWITCH DISCONNECTORS

Connections and Mountings

Connection of Busbar and Terminated Cable

Multiple Conductors

Connection (one electric cable)

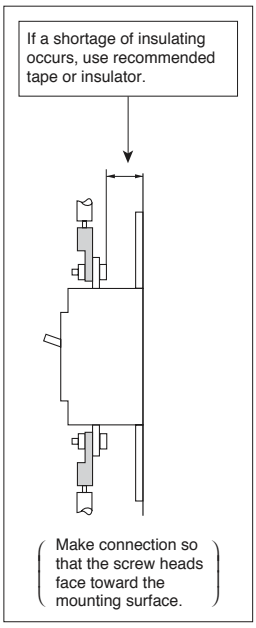

Connection (two electric cables)

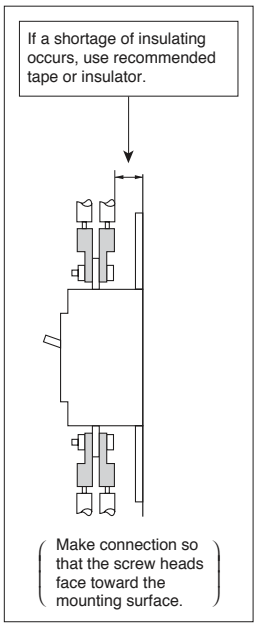

Connection (two terminals)

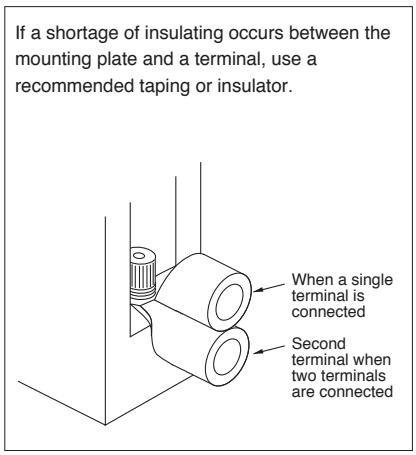

Compression Terminal

Each terminal on 250A models has a serrated surface. This provides excellent grip for heavy cables terminated with crimp lug terminals, thereby preventing sideways rotation of the lug.

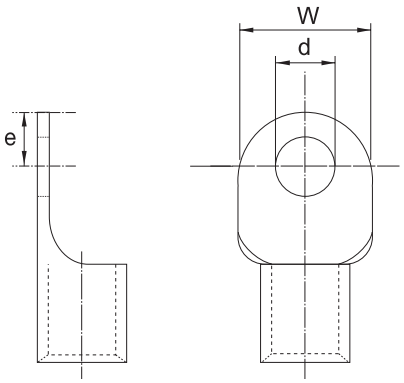

Maximum Dimensions of Compression Terminals		
Frame Size (A)	160	250
Width, W (mm)	17.2	25
Diameter, d (mm)	8.5	9
Maximum from centre to tip, e(mm)	9.5	11

TEMBREAK 2 LITE MOULDED CASE CIRCUIT BREAKERS AND SWITCH DISCONNECTORS

Insulation Distance from Line Side

The insulation distance between the breaker and earthed metal parts and insulators shown in the table on the next page must be maintained to prevent arcing faults occurring due to conductive ionised gas. In addition, completely cover exposed conductors, to their roots at the breaker or to below the height protected by interpole barriers, on the line side of the breaker using insulation tube or tape, in order to provide positive protection against short circuit or ground fault due to the metal chipping, surge voltage, dust particles or salt. Be sure to install the interpole barriers supplied with the breaker.

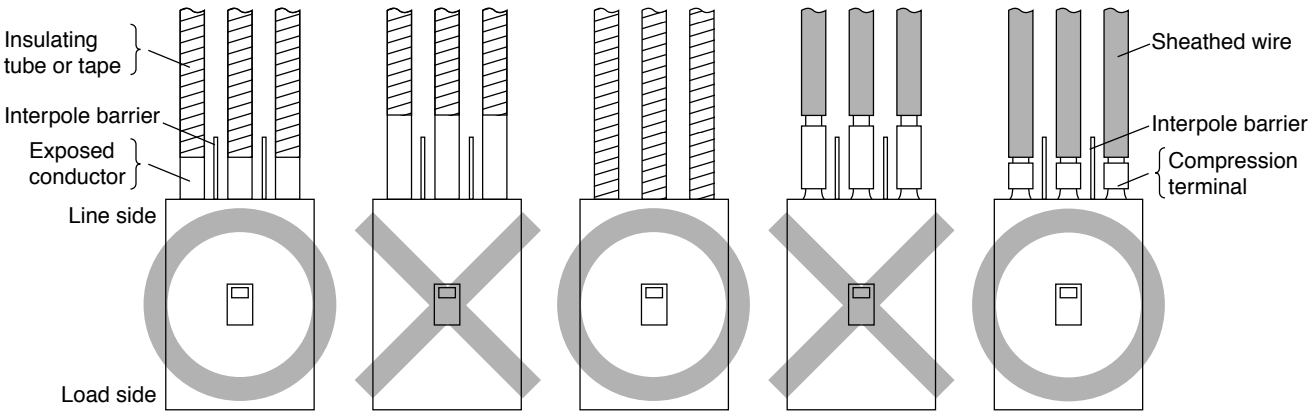

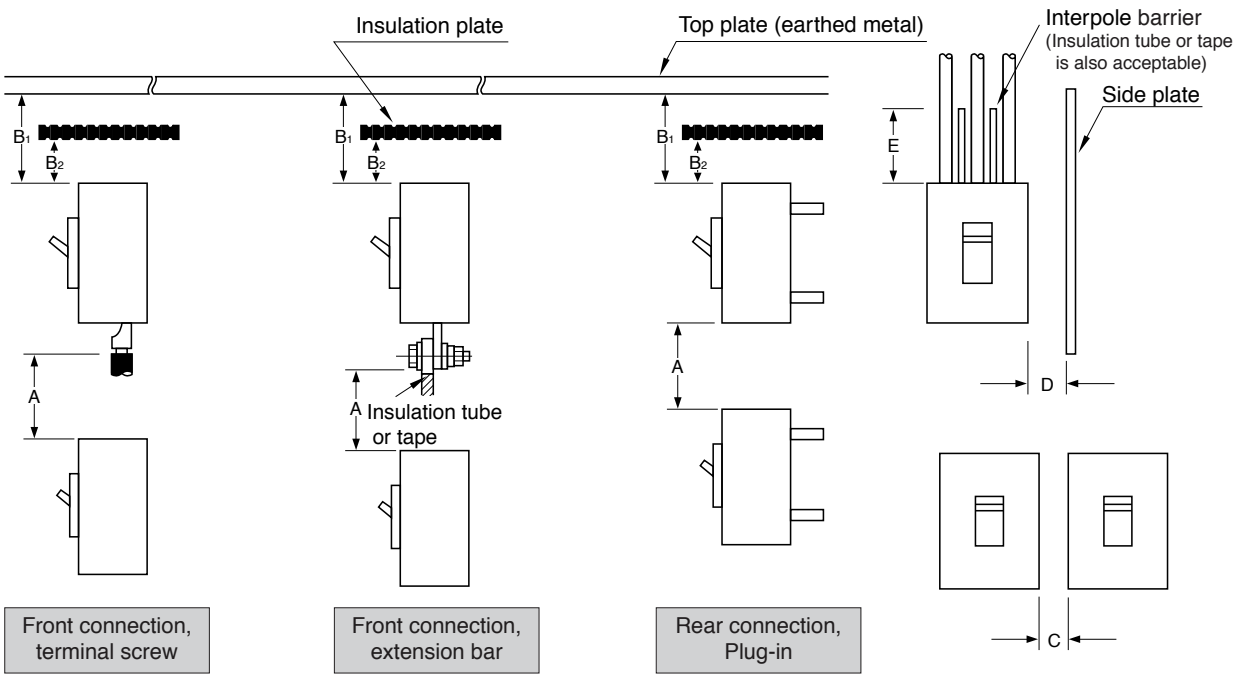

A Distance from lower breaker to exposed live part of upper breaker terminal (front connection) or distance from lower breaker to end face of upper breaker (rear connection).
B1 Distance from end face of breaker to top plate.
B2 Distance from end face of breaker to insulation plate.
C Gap between breakers.
D Distance from side of breaker to side plate (earthed metal).
E Dimension of insulation over exposed conductors.

TEMBREAK 2 LITE MOULDED CASE CIRCUIT BREAKERS AND SWITCH DISCONNECTORS

Insulation Distance from Line Side

Moulded Case Circuit Breakers

Breaker	A Note②	B1	B2	C	D	E
E250-SCF, E250-SF, E250-SCJ, E250-SJ	50	40	40	✻ Possible to set close	50	Not less than the length of the bare live part Note 3
E160-SF, S160-SCF, E160-SJ, S160-SF, S160-SCJ, S160-SJ	50	50	10	✻ Possible to set close	25	Not less than the length of the bare live part Note 3
S250-SF, S250-SJ	50	50	40	✻ Possible to set close	50	Not less than the length of the bare live part Note 3

Notes:

① Required to allow free and uninterrupted flow of arc gases. Ensure additional clearance or insulation distance if required to perform wiring, barrier installation or electrical work or to meet the need for more insulation distance between bare live parts and grounded metal members in a switchboard or the like.

② The figures are for lower breakers.

③ For front connection breakers, insulate all exposed conductors of the line side until the breaker end. If interpole barriers are packed, be sure to use the barriers; more over, insulate all exposed conductors by insulating tape or the like so that the tape overlaps with the barriers.

* If using extension bars (optional), ensure the insulation distance specified for the application.

Reverse Connection

The breakers are available for normal connection by default. Reverse connection is optional.
See tables below.

Breaker	AC240V	AC415V	AC450V
E160-SF, S160-SCF, S160-SF,E160-SJ, S160-SCJ, S160-SJ, S160-SN E250-SCF, E250-SF, S250-SF, E250-SCJ, E250-SJ, S250-SJ, S250-SN	◉	◉	◉

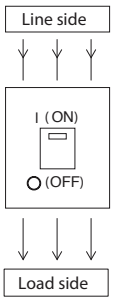

Normal connection

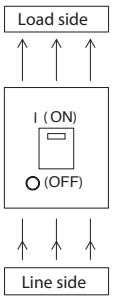

Reverse connection

TEMBREAK 2 LITE MOULDED CASE CIRCUIT BREAKERS AND SWITCH DISCONNECTORS

Temperature Ratings

MCCB Type	Connection Type	Rating at Calibration temperature (50°C)	Rated current (A)		
			(55°C)	(60°C)	(65°C)
E160-SF, S160-SCF S160-SF	Front Rear	16A	15	14	13
		20A	19	18	17
		25A	24	24	23
		32A	30	28	27
		40A	39	37	36
		50A	48	47	45
		63A	61	59	57
		80A	76	73	70
		100A	97	94	91
		125A	122	118	115
		160A	156	152	149
E160-SJ, S160-SCJ, S160-SJ	Front Rear	25A	24	24	23
		40A	39	37	36
		63A	61	59	57
		80A	77	73	70
		100A	97	94	91
		125A	122	118	115
		160A	156	152	149
E250-SCF, E250-SF S250-SF	Front Rear	125A	120	116	111
		150A	146	143	139
		175A	168	164	159
		200A	194	189	184
		225A	216	211	204
		250A	243	236	229
E250-SCJ, E250-SJ S250-SJ	Front Rear	100A	98	96	94
		125A	122	119	115
		160A	156	152	148
		200A	195	189	183
		250A	243	236	229

MOULDED CASE CIRCUIT BREAKERS AND SWITCH DISCONNECTORS FOR USE ABOVE 250V DC

Connection of Conductors to DC Circuit Breakers

		Non-grounded system (Protection + Isolation function)		Grounded system (Protection)		Grounded system (Protection + Isolation function)	
	Ordinally connection	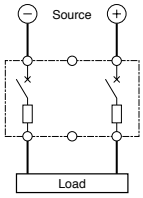		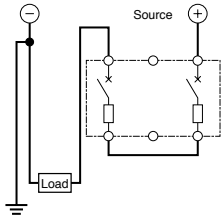		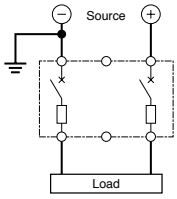	
	Reverse connection	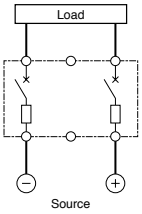		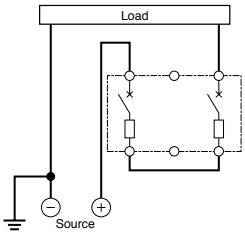		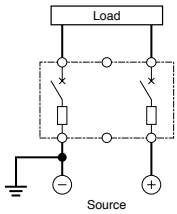	
Type of breakers	No.s of poles	Applicable voltage (V)	Rated breaking capacity I_{cu}/I_{cs}	Applicable voltage (V)	Rated breaking capacity I_{cu}/I_{cs}	Applicable voltage (V)	Rated breaking capacity I_{cu}/I_{cs}
S1000-ND	2P	≦250	50kA/20kA	≦250	50kA/20kA	≦150	50kA/20kA

✻ : 2 poles breaker is a 3 pole breaker with the center pole omitted.

		Non-grounded system (Protection + Isolation function)		Grounded system (Protection)		Grounded system (Protection + Isolation function)	
	Ordinally connection	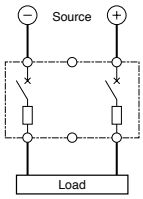		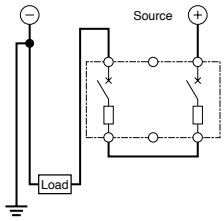		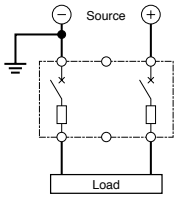	
Type of breakers	No.s of poles	Applicable voltage (V)	Rated breaking capacity I_{cu}/I_{cs}	Applicable voltage (V)	Rated breaking capacity I_{cu}/I_{cs}	Applicable voltage (V)	Rated breaking capacity I_{cu}/I_{cs}
XS1250ND	2P	≦250	50kA/30kA	≦250	50kA/30kA	≦150	50kA/30kA
XS1600ND	2P	≦250	50kA/30kA	≦250	50kA/30kA	≦150	50kA/30kA
XS2000ND	2P	≦250	50kA/30kA	≦250	50kA/30kA	≦150	50kA/30kA
XS2500ND	2P	≦250	50kA/30kA	≦250	50kA/30kA	≦150	50kA/30kA
XS3200ND	2P	≦250	50kA/30kA	≦250	50kA/30kA	≦150	50kA/30kA

✻ : 2 poles breaker is a 3 pole breaker with the center pole omitted.

INSTALLATION

MOULDED CASE CIRCUIT BREAKERS AND SWITCH DISCONNECTORS FOR USE ABOVE 250V DC

Connection of Conductors to DC Circuit Breakers

		Non-grounded system (Protection + Isolation function)		Grounded system (Protection)		Grounded system (Protection + Isolation function)	
	Ordinally connection	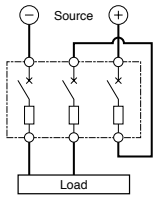		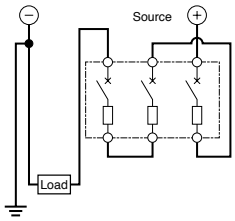		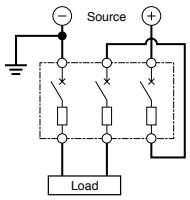	
	Reverse connection	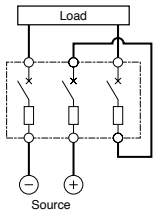		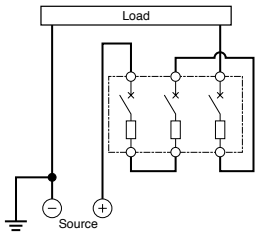		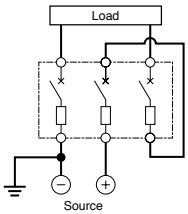	
Type of breakers	No.s of poles	Applicable voltage (V)	Rated breaking capacity I_{cu}/I_{cs}	Applicable voltage (V)	Rated breaking capacity I_{cu}/I_{cs}	Applicable voltage (V)	Rated breaking capacity I_{cu}/I_{cs}
S160-SD	3P	≦600	5kA/5kA	≦600	5kA/5kA	≦400	5kA/5kA
S160-SD	3P	≦500	7.5kA/7.5kA	≦500	7.5kA/7.5kA	≦350	7.5kA/7.5kA
S160-SD	3P	≦350	10kA/10kA	≦350	10kA/10kA	≦250	10kA/10kA
S160-GD	3P	≦600	10kA/5kA	≦600	10kA/5kA	≦400	10kA/5kA
S160-GD	3P	≦500	15kA/7.5kA	≦500	15kA/7.5kA	≦350	15kA/7.5kA
S250-SD	3P	≦600	5kA/5kA	≦600	5kA/5kA	≦400	5kA/5kA
S250-SD	3P	≦500	7.5kA/7.5kA	≦500	7.5kA/7.5kA	≦350	7.5kA/7.5kA
S250-SD	3P	≦350	10kA/10kA	≦350	10kA/10kA	≦250	10kA/10kA
S250-GD	3P	≦600	10kA/5kA	≦600	10kA/5kA	≦400	10kA/5kA
S250-GD	3P	≦500	15kA/7.5kA	≦500	15kA/7.5kA	≦350	15kA/7.5kA
S400-ND	3P	≦600	15kA/15kA	≦600	15kA/15kA	≦400	15kA/15kA
S400-ND	3P	≦350	20kA/20kA	≦350	20kA/20kA	≦250	20kA/20kA
S800-ND	3P	≦600	20kA/10kA	≦600	20kA/10kA	≦400	20kA/10kA
S800-ND	3P	≦350	30kA/15kA	≦350	30kA/15kA	≦250	30kA/15kA
S1000-ND	3P	≦600	20kA/10kA	≦600	20kA/10kA	≦400	20kA/10kA
S1000-ND	3P	≦350	30kA/15kA	≦350	30kA/15kA	≦250	30kA/15kA
PVS160-SDL ①	3P	≦750	5kA/5kA	≦750	5kA/5kA	≦500	5kA/5kA
PVS250-SDL ①	3P	≦750	5kA/5kA	≦750	5kA/5kA	≦500	5kA/5kA
PVS400-NDL	3P	≦750	10kA/5kA	≦750	10kA/5kA	≦500	10kA/5kA
PVS800-NDL	3P	≦750	10kA/10kA	≦750	10kA/10kA	≦500	10kA/10kA
S160-SDN	3P	≦600	—	≦600	—	≦400	—
S250-SDN	3P	≦600	—	≦600	—	≦400	—

Note ① : Two breakers are available for ordlnary connection and for reverse connection. Use the ordinally connected breakers for ordinal connection and the reverse connected breakers for reverse connection. Do not use contrary.

MOULDED CASE CIRCUIT BREAKERS AND SWITCH DISCONNECTORS FOR USE ABOVE 250V DC

Connection of Conductors to DC Circuit Breakers

		Non-grounded system (Protection + Isolation function)		Grounded system (Protection)		Grounded system (Protection + Isolation function)	
	Ordinally connection	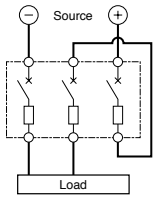		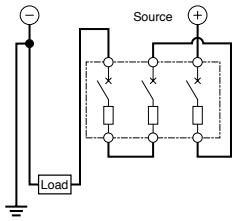		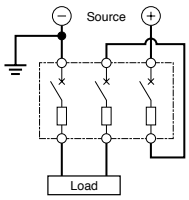	
Type of breakers	No.s of poles	Applicable voltage (V)	Rated breaking capacity I_{cu}/I_{cs}	Applicable voltage (V)	Rated breaking capacity I_{cu}/I_{cs}	Applicable voltage (V)	Rated breaking capacity I_{cu}/I_{cs}
XS1250ND	3P	≦600	20kA/15kA	≦600	20kA/15kA	≦400	20kA/15kA
XS1250ND	3P	≦500	50kA/25kA	≦500	50kA/25kA	≦350	50kA/25kA
XS1600ND	3P	≦600	20kA/15kA	≦600	20kA/15kA	≦400	20kA/15kA
XS1600ND	3P	≦500	50kA/25kA	≦500	50kA/25kA	≦350	50kA/25kA
XS2000ND	3P	≦600	20kA/15kA	≦600	20kA/15kA	≦400	20kA/15kA
XS2000ND	3P	≦500	50kA/25kA	≦500	50kA/25kA	≦350	50kA/25kA
XS2500ND	3P	≦600	20kA/15kA	≦600	20kA/15kA	≦400	20kA/15kA
XS2500ND	3P	≦500	50kA/25kA	≦500	50kA/25kA	≦350	50kA/25kA
XS3200ND	3P	≦600	20kA/15kA	≦600	20kA/15kA	≦400	20kA/15kA
XS3200ND	3P	≦500	50kA/25kA	≦500	50kA/25kA	≦350	50kA/25kA

INSTALLATION

MOULDED CASE CIRCUIT BREAKERS AND SWITCH DISCONNECTORS FOR USE ABOVE 250V DC

Connection of Conductors to DC Circuit Breakers

		Non-grounded system (Protection + Isolation function)		Grounded system (Protection)		Grounded system (Protection + Isolation function)	
	Ordinally connection	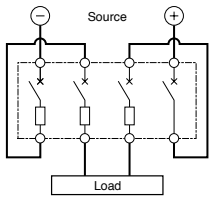		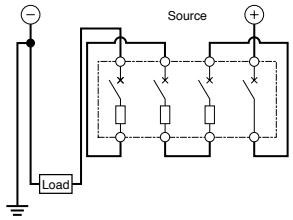		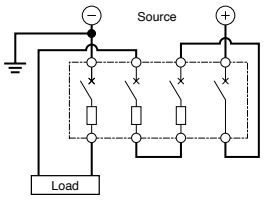	
	Reverse connection	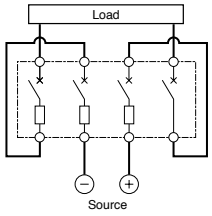		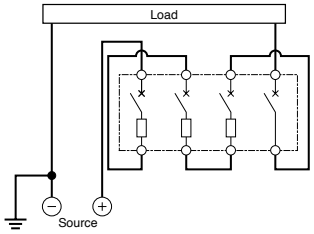		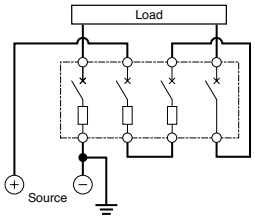	
Type of breakers	No.s of poles	Applicable voltage (V)	Rated breaking capacity I_{cu}/I_{cs}	Applicable voltage (V)	Rated breaking capacity I_{cu}/I_{cs}	Applicable voltage (V)	Rated breaking capacity I_{cu}/I_{cs}
PVS160-SDL	4P	≦750	10kA/5kA	≦750	10kA/5kA	≦550	10kA/5kA
PVS250-SDL	4P	≦750	10kA/5kA	≦750	10kA/5kA	≦550	10kA/5kA
PVS160-SDH	4P	≦1000	5kA/5kA	≦1000	5kA/5kA	≦750	5kA/5kA
PVS250-SDH	4P	≦1000	5kA/5kA	≦1000	5kA/5kA	≦750	5kA/5kA
PVS400-NDL	4P	≦750	10kA/10kA	≦750	10kA/10kA	≦750	10kA/10kA ②
PVS400-NDH	4P	≦1000	5kA/5kA	≦1000	5kA/5kA		
PVS800-NDL	4P	≦750	10kA/10kA	≦750	10kA/10kA	≦750	10kA/10kA
PVS800-NDH	4P	≦1000	5kA/5kA	≦1000	5kA/5kA	≦750	5kA/5kA
PVS160-SNL	4P	≦800	—	≦800	—	≦600	—
PVS250-SNL	4P	≦800	—	≦800	—	≦600	—
PVS160-SNH	4P	≦1000	—	≦1000	—	≦750	—
PVS250-SNH	4P	≦1000	—	≦1000	—	≦750	—
PVS400-NNL	4P	≦800	—	≦800	—	≦750	—
PVS400-NNH	4P	≦1000	—	≦1000	—		
PVS800-NNL	4P	≦800	—	≦800	—	≦750	—
PVS800-NNH	4P	≦1000	—	≦1000	—		

Note ② : The breaking capacity goes down to I_{cu}10kA / I_{cs}5kA for ground fault protection.

MOULDED CASE CIRCUIT BREAKERS AND SWITCH DISCONNECTORS FOR USE ABOVE 250V DC

Insulation Distance DC600V or Less

The insulation distances between the breaker and earthed metal parts and insulators shown in the table below must be maintained to prevent arcing faults occurring due to conductive ionised gas. In addition, any exposed line-side conductors must be completely covered, right up the breaker casing or to below the height protected by any interpole barriers. This can done by using an insulation tube or tape, in order to provide positive protection against short circuit or ground fault due to metal chipping, surge voltage, dust particles or salt. If terminal covers are not being used, the interpole barriers supplied with the breaker as standard must be used.

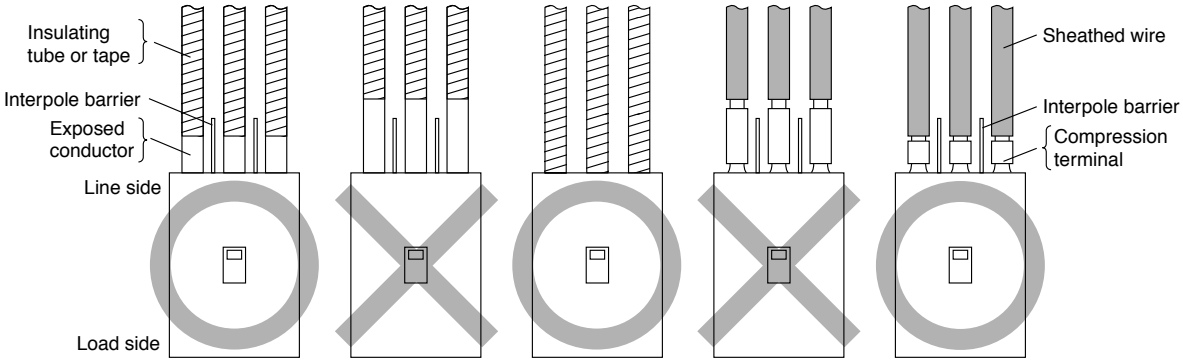

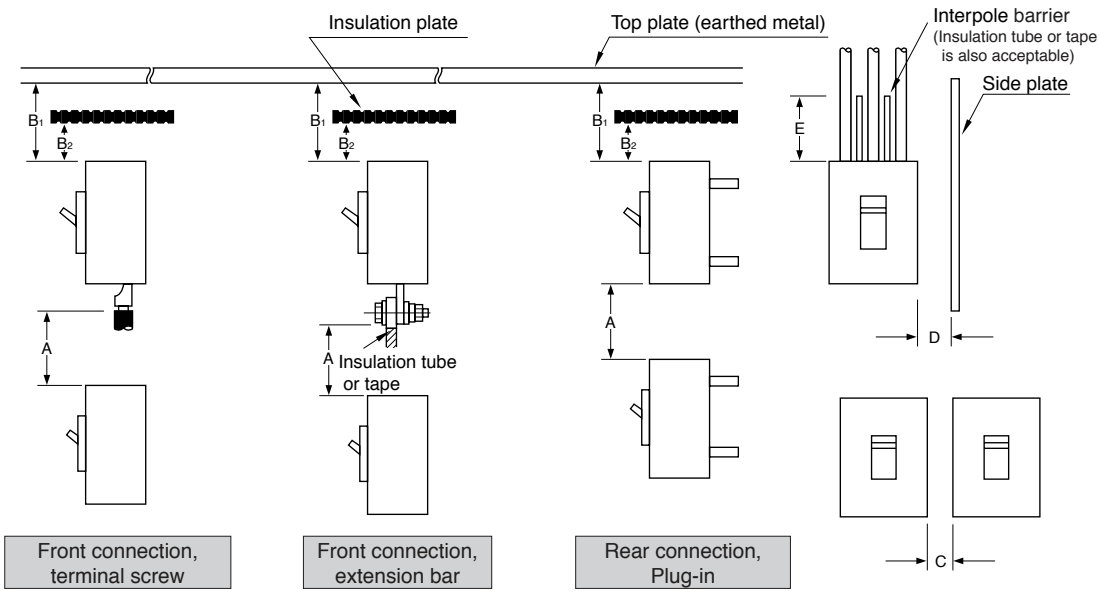

A Distance from lower breaker to exposed live part of upper breaker terminal (front connection) or distance from lower breaker to end face of upper breaker (rear connection).
B1 Distance from end face of breaker to top plate.
B2 Distance from end face of breaker to insulation plate.
C Gap between breakers.
D Distance from side of breaker to side plate (earthed metal).
E Dimension of insulation over exposed conductors.

INSTALLATION

MOULDED CASE CIRCUIT BREAKERS AND SWITCH DISCONNECTORS FOR USE ABOVE 250V DC

Insulation Distance, mm (DC 600 V or less) Note ①

Moulded Case Circuit Breakers					A Note ②	B1	B2		C	D	E
S160-SD	S160-GD	S160-SDN	⑤		50	50	50	✻	Possible to set close Note ③	25	Not less than the length of the bare live part Note ④
S250-SD	S250-GD	S250-SDN	⑤		65	65	65	✻	〃	50	〃
S400-ND	S800-ND	S1000-ND			150	120	80		〃	80	〃
XS1250ND	XS1600ND	XS2000ND	XS2500ND	XS3200ND	150	150	100		〃	100	〃

Notes:

① Required to allow free and uninterrupted flow of arc gases. Ensure additional clearance or insulation distance if required to perform wiring, barrier installation or electrical work or to meet the need for more insulation distance between bare live parts and grounded metal members in a switchboard or the like.

② The figures are for lower breakers.

③ When the accessories are fitted it is not possible to set close.

④ For front connected breakers, insulate all exposed conductors of the line side until the breaker end. If interpole barriers are packed, be sure to use the barriers; more over, insulate all exposed conductors by insulating tape or the like so that the tape overlaps with the barriers.

⑤ Be sure to install the terminal covers (supplied as standard) on the line side of the breakers.

✻ If using extension bars (optional), ensure the insulation distance specified for the application.

MOULDED CASE CIRCUIT BREAKERS AND SWITCH DISCONNECTORS FOR USE ABOVE 250V DC

Insulation Distances

PVS160-SDL 3P, PVS250-SDL 3P

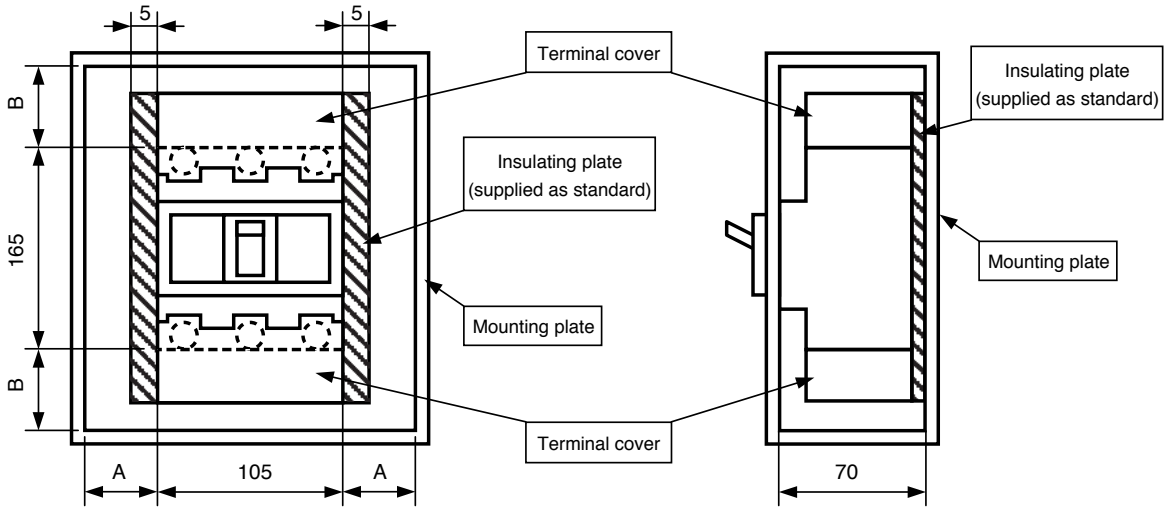

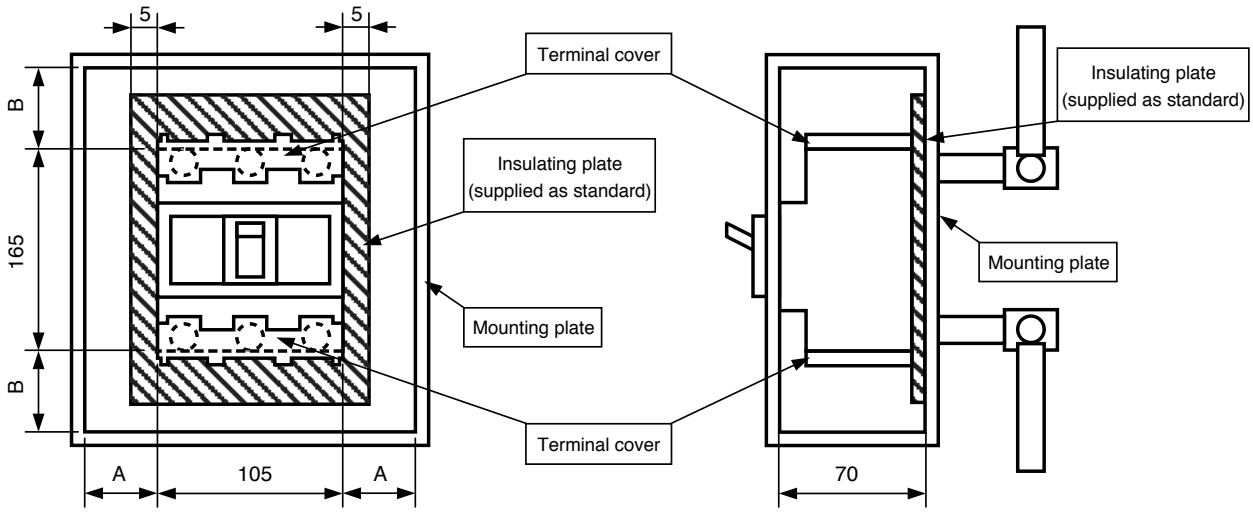

Type	Connection	Minimum insulation distance (mm)		Insulating plate	
		A	B	Terminal caver	Insulating plate
PVS160-SDL 3P PVS250-SDL 3P	Front-connected Rear-connected	50	65	2pcs are supplied for line and load side as standard.	2pcs of 115mm × 137.5mm are supplied as standard.

INSTALLATION

MOULDED CASE CIRCUIT BREAKERS AND SWITCH DISCONNECTORS FOR USE ABOVE 250V DC

Insulation Distances

PVS160-SDL 4P, PVS250-SDL 4P, PVS160-SNL 4P, PVS 250-SNL 4P

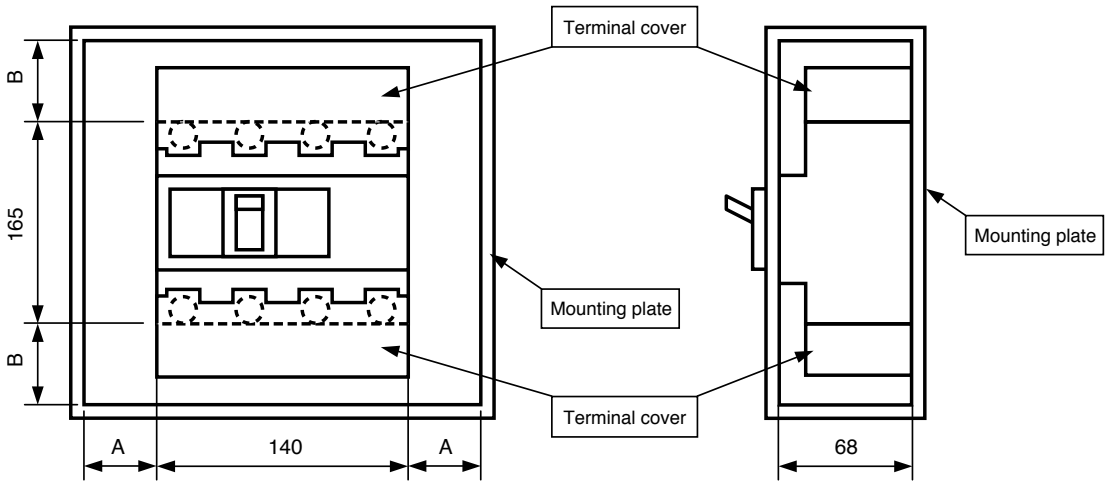

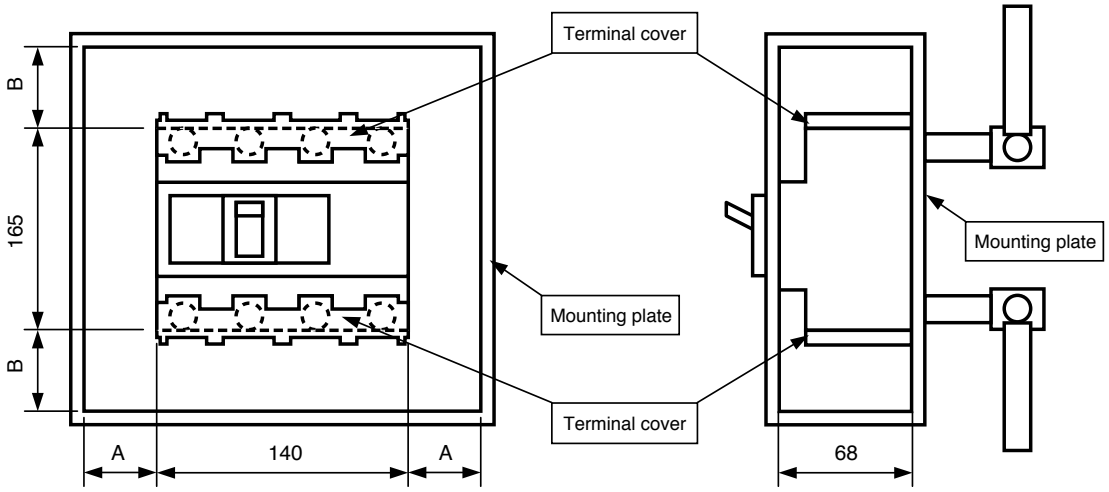

Type	Connection	Minimum insulation distance (mm)		Terminal caver
		A	B	
PVS160-SDL 4P PVS250-SDL 4P PVS160-SNL 4P PVS250-SNL 4P	Front-connected Rear-connected	50	65	2pcs are supplied for line and load side as standard.

MOULDED CASE CIRCUIT BREAKERS AND SWITCH DISCONNECTORS FOR USE ABOVE 250V DC

Insulation Distances

PVS160-SDH 4P, PVS250-SDH 4P, PVS160-SNH 4P, PVS250-SNH 4P

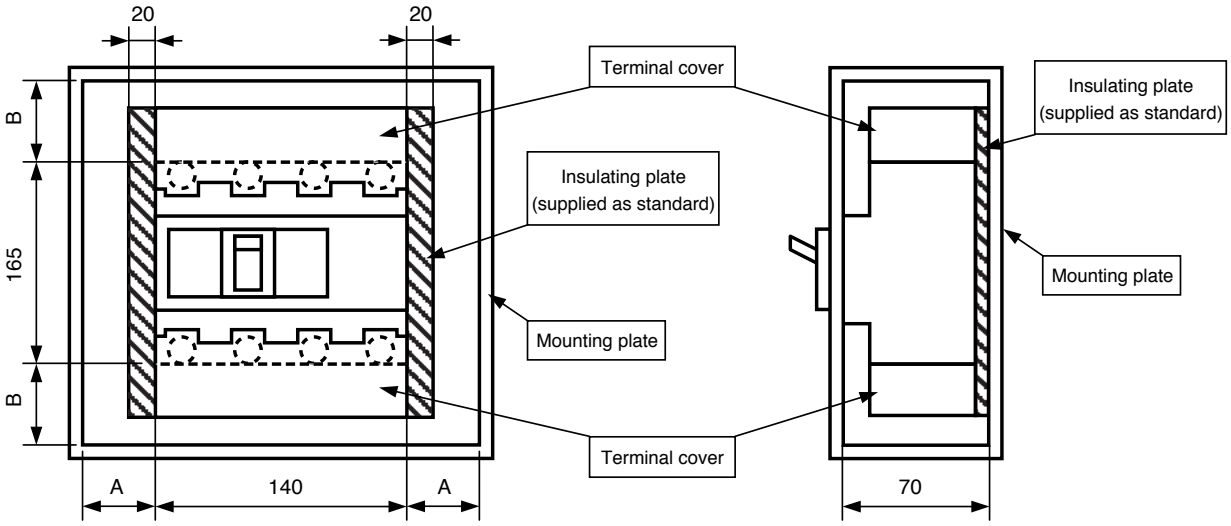

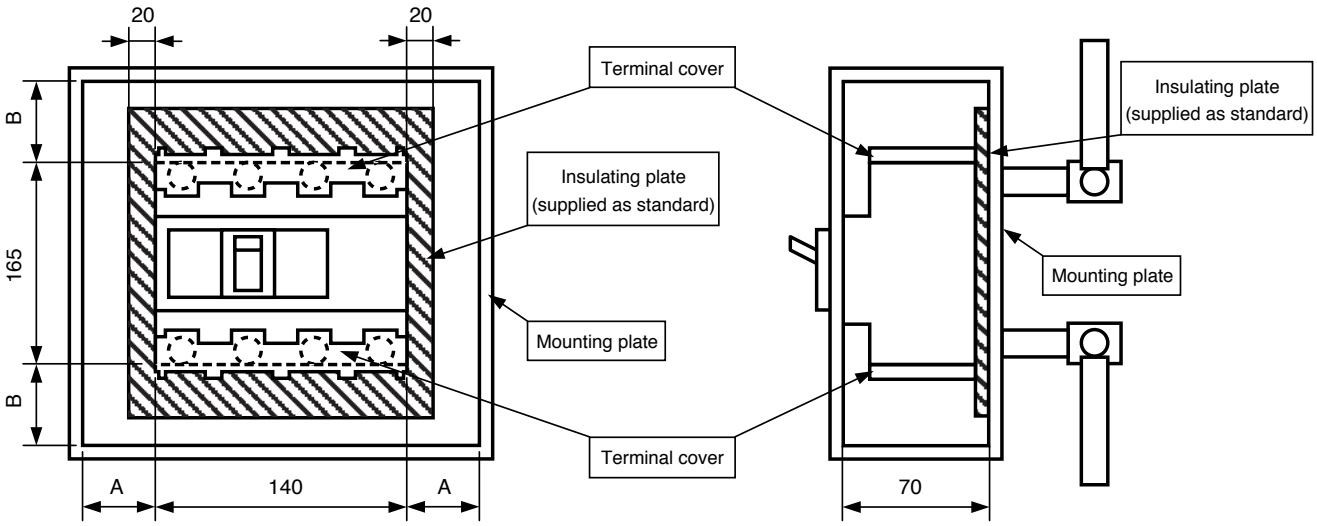

Type	Connection	Minimum insulation distance (mm)		Insulating plate	
		A	B	Terminal caver	Insulating plate
PVS160-SDH 4P PVS250-SDH 4P PVS160-SNH 4P PVS250-SNH 4P	Front-connected Rear-connected	50	65	2pcs are supplied for line and load side as standard.	2pcs of 180mm × 137.5mm are supplied as standard.

INSTALLATION

MOULDED CASE CIRCUIT BREAKERS AND SWITCH DISCONNECTORS FOR USE ABOVE 250V DC

Insulation Distances

PVS 400-NDL 3P

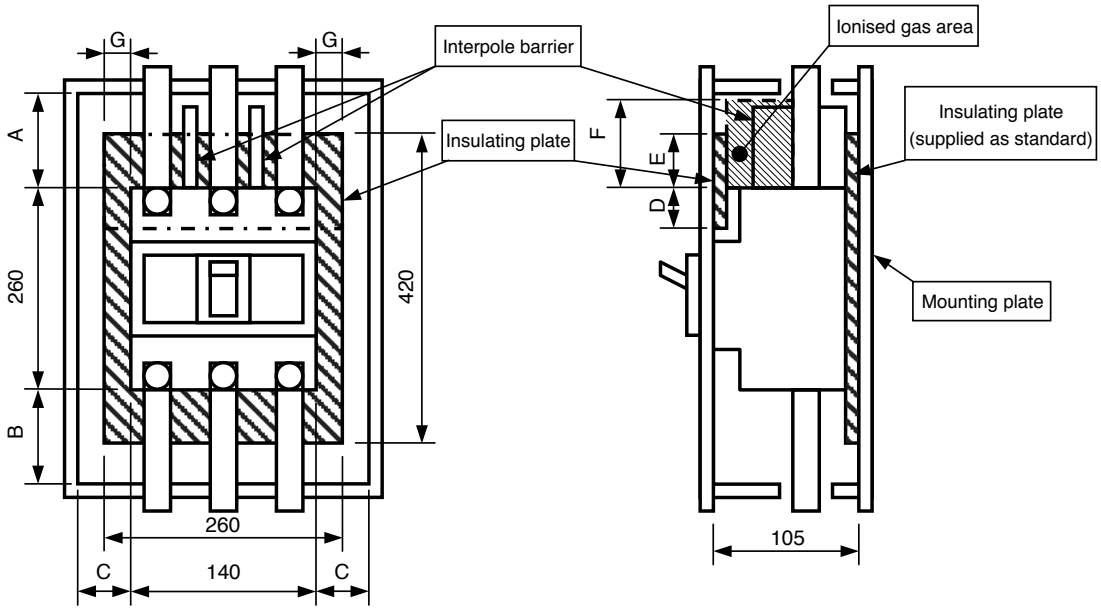

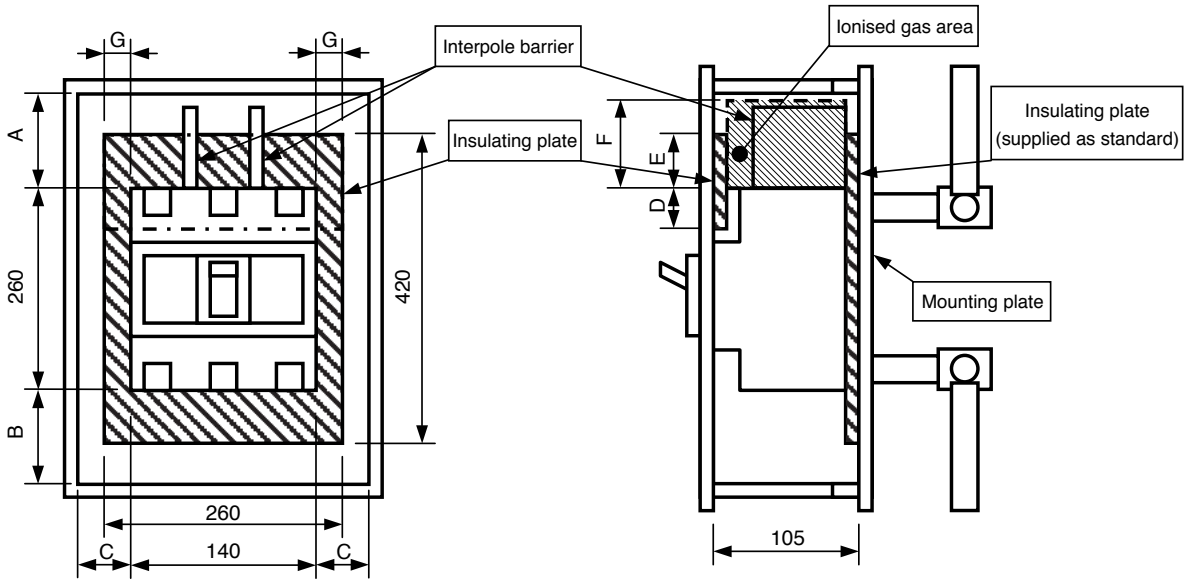

Type	Connection	Minimum insulation distance (mm)							Insulating plate	
		A	B	C	D	E	F	G	Front panel side	Mounting plate side
PVS400-NDL 3P	Front-connected Rear-connected	160	80	80	30	140	160	60	Not supplied	Supplied as standard

MOULDED CASE CIRCUIT BREAKERS AND SWITCH DISCONNECTORS FOR USE ABOVE 250V DC

Insulation Distance DC750V-1000V

The insulation distances between the breaker and earthed metal parts and insulators shown in the table below must be maintained to prevent arcing faults occurring due to conductive ionised gas. In addition, any exposed line-side conductors must be completely covered, right up the breaker casing or to below the height protected by any interpole barriers. This can done by using an insulation tube or tape, in order to provide positive protection against short circuit or ground fault due to metal chipping, surge voltage, dust particles or salt. If terminal covers are not being used, then the interpole barriers supplied with the breaker as standard must be used. For DC750V-1000V breakers, the front and the rear insulating plates must also be installed.

PVS400-NDL 4P, PVS400-NDH 4P

Front-connected

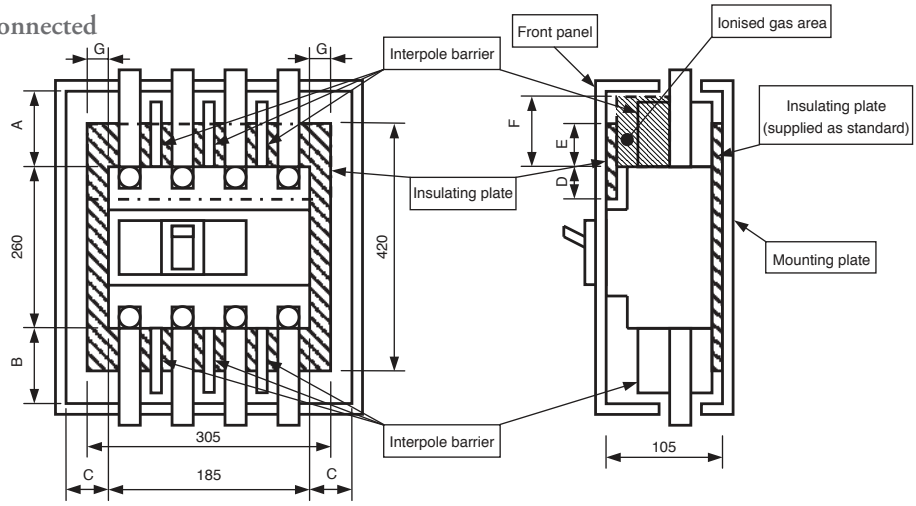

Rear-connected

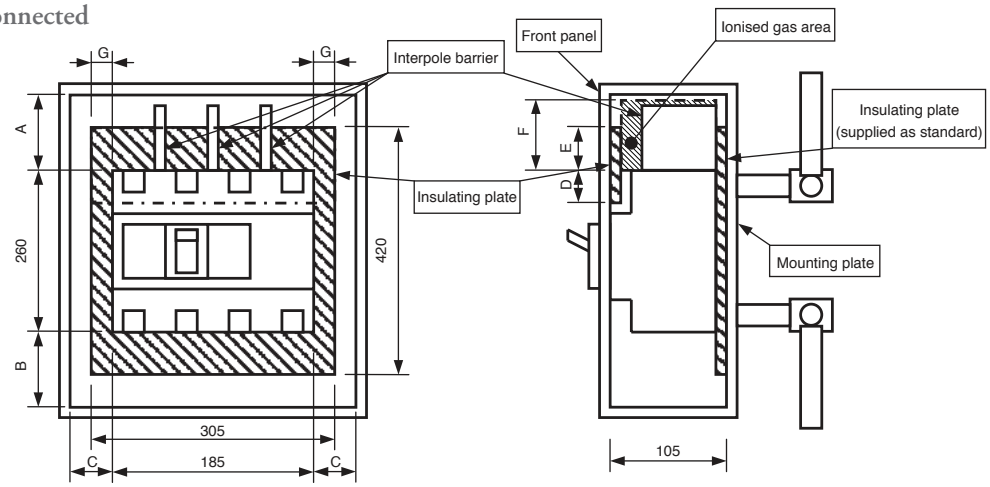

Type	Connection	Minimum insulation distance (mm)							Insulating plate	
		A	B	C	D	E	F	G	Front panel side	Mounting plate side
PVS400-NDL 4P PVS400-NDH 4P	Front-connected Rear-connected	160	80	80	30	140	160	60	Not supplied	Supplied as standard

INSTALLATION

MOULDED CASE CIRCUIT BREAKERS AND SWITCH DISCONNECTORS FOR USE ABOVE 250V DC

Insulation Distance DC750V-1000V

PVS400-NNL 4P, PVS400-NNH 4P

Front-connected

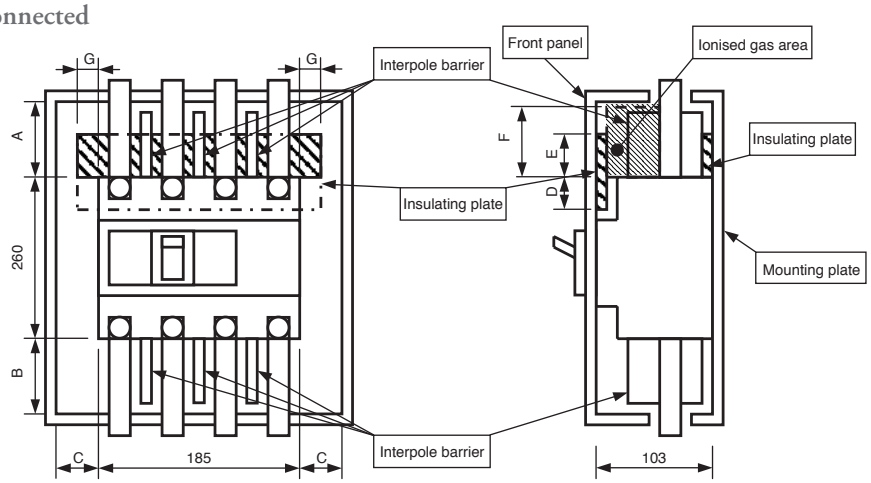

Rear-connected

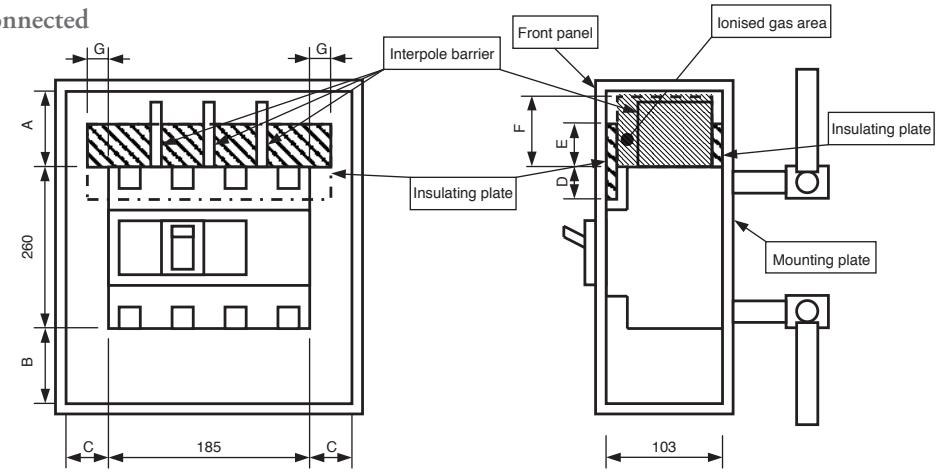

Type	Connection	Minimum insulation distance (mm)							Insulating plate	
		A	B	C	D	E	F	G	Front panel side	Mounting plate side
PVS400-NNL 4P PVS400-NNH 4P	Front-connected Rear-connected	120	80	80	30	80	80	40	Not supplied	Not supplied

MOULDED CASE CIRCUIT BREAKERS AND SWITCH DISCONNECTORS FOR USE ABOVE 250V DC

Insulation Distance DC750V-1000V

PVS800-NDL 4P, PVS800-NDH 4P

Front-connected

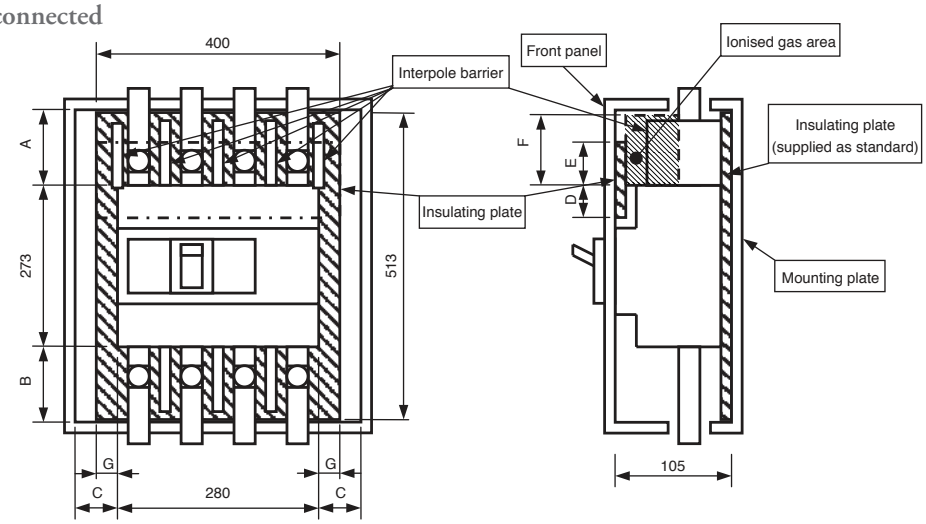

Rear-connected

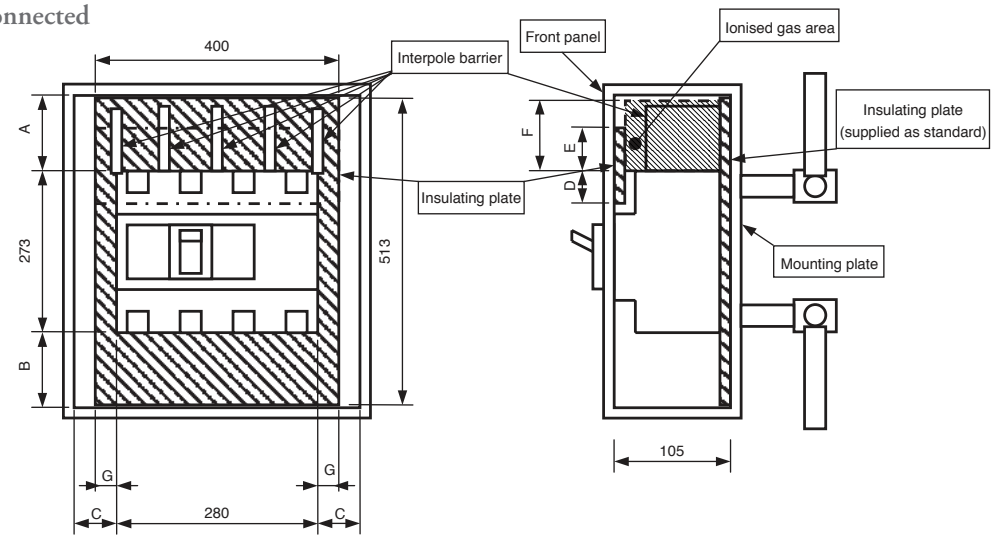

Type	Connection	Minimum insulation distance (mm)							Insulating plate	
		A	B	C	D	E	F	G	Front panel side	Mounting plate side
PVS800-NDL 4P PVS800-NDH 4P	Front-connected Rear-connected	160	80	80	80	140	160	60	Not supplied	Supplied as standard

INSTALLATION

MOULDED CASE CIRCUIT BREAKERS AND SWITCH DISCONNECTORS FOR USE ABOVE 250V DC

Insulation Distance DC750V-1000V

PVS800-NNL 4P, PVS800-NNH 4P

Front-connected

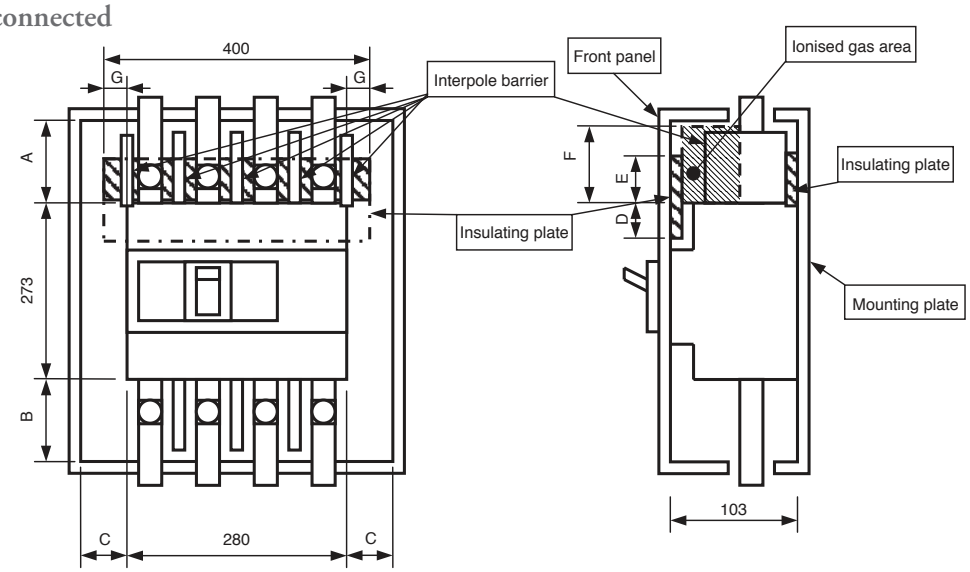

Rear-connected

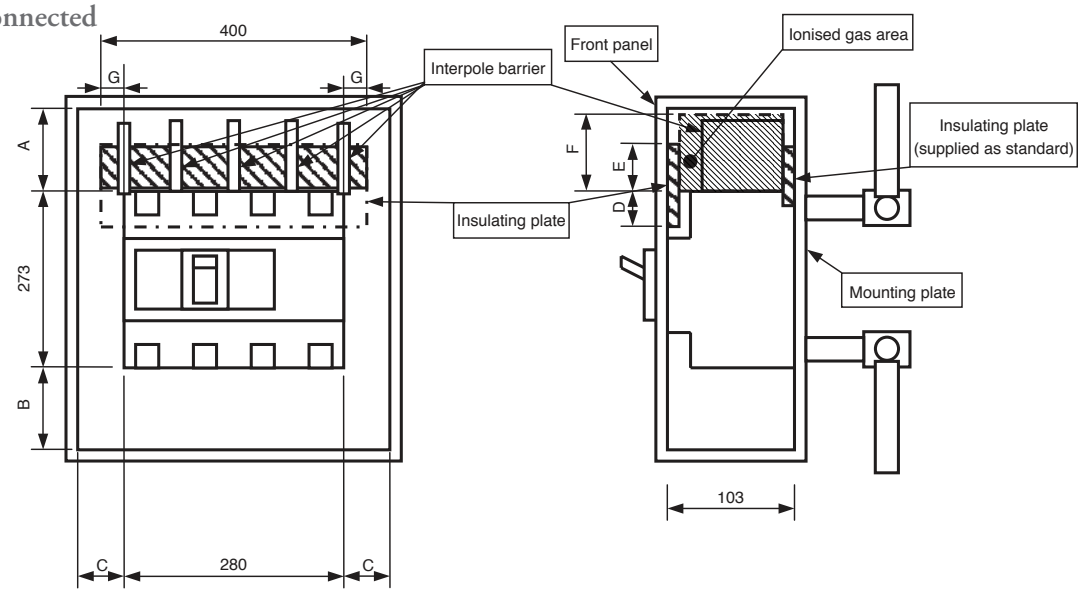

Type	Connection	Minimum insulation distance (mm)							Insulating plate	
		A	B	C	D	E	F	G	Front panel side	Mounting plate side
PVS800-NNL 4P PVS800-NNH 4P	Front-connected Rear-connected	120	80	80	80	80	80	60	Not supplied	Not supplied

MOULDED CASE CIRCUIT BREAKERS AND SWITCH DISCONNECTORS FOR USE ABOVE 250V DC

Connection of Conductors to DC Circuit Breakers

PVS800-NDL 3P

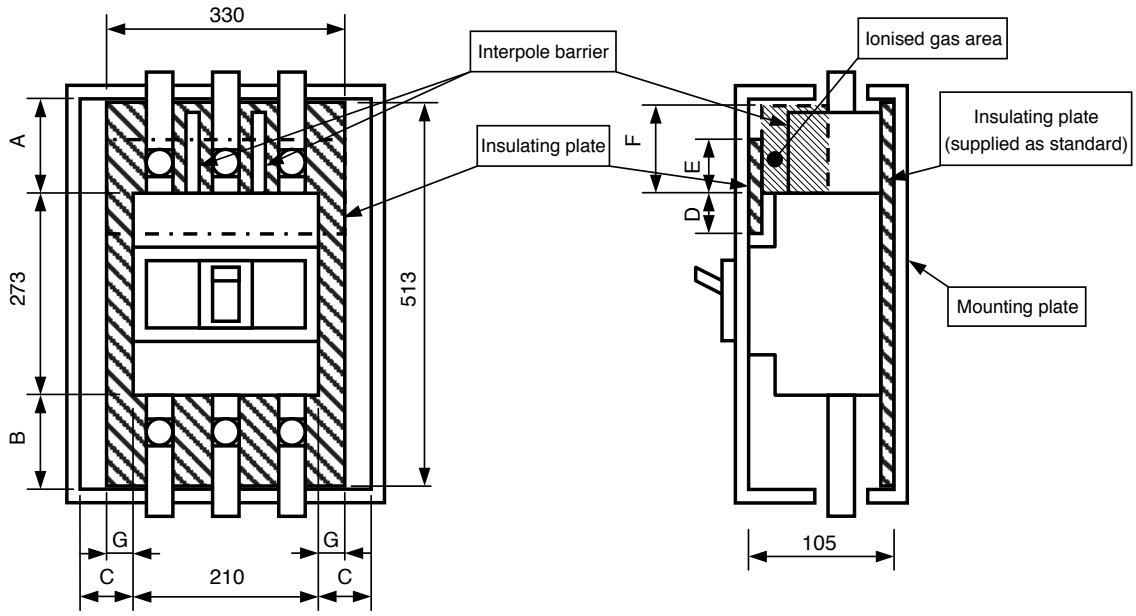

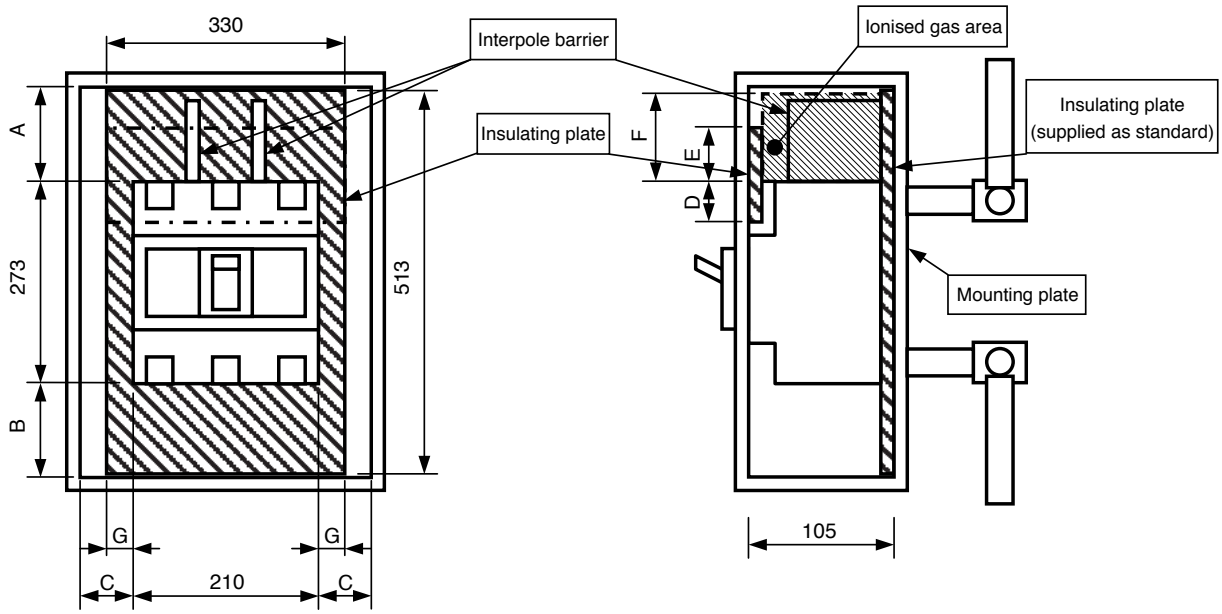

Type	Connection	Minimum insulation distance (mm)							Insulating plate	
		A	B	C	D	E	F	G	Front panel side	Mounting plate side
PVS800-NDL 3P	Front-connected Rear-connected	160	80	80	80	140	160	60	Not supplied	Supplied as standard

INSTALLATION

MOULDED CASE CIRCUIT BREAKERS AND SWITCH DISCONNECTORS FOR USE ABOVE 250V DC

Temperature Ratings

Calibration Temperature: 50°C

MCCB Type	Connection Type	Rating at Calibration temperature (50°C)	Rated current (A)			
			(50°C)	(55°C)	(60°C)	(65°C)
S160-SD S160-GD PVE160-SDL PVS160-SDL PVS160-SDH	Front Rear	25A	25	24	24	23
		32A	32	31	29	28
		40A	40	39	37	36
		63A	63	61	59	57
		80A	80	77	73	70
		100A	100	97	94	91
		125A	125	122	118	115
		160A	160	156	152	149
S250-SD S250-GD PVS250-SDL PVS250-SDH	Front Rear 200A	100A	100	98	96	94
		125A	125	122	119	115
		160A	160	156	152	148
		200	195	189	183	
		250A	250	243	236	229
S400-ND PVS400-NDL, PVS400-NDH	Front Rear	250A	250	237	230	223
		400A	400	380	369	358
S800-ND PVS800-NDL, PVS800-NDH	Front Rear	630A	630	600	585	569
		800A	800	759	738	717
S1000-ND	Front Rear	1000A	1000	950	920	900
XS1250ND	Front Rear	1250A	1250	1175	1150	1100
XS1600ND	Front Rear	1600A	1600	1500	1470	1440
XS2000ND	Rear	2000A	2000	2000	1840	1800
XS2500ND	Rear	2500A	2500	2300	2250	2175

CONTENTS

TEMBREAK 2 & TEMBREAK

MCCBs FROM 12A TO 3200A • MCCBs FOR 1000V AC
MCCBs FOR 1000V DC • MCCBs WITH INTEGRAL RCD
SWITCH DISCONNECTORS • MEASUREMENT AND DATA COMMUNICATION

RATINGS AND SPECIFICATIONS	SECTION 1
PROTECTION CHARACTERISTICS	SECTION 2
APPLICATION DATA	SECTION 3
ACCESSORIES	SECTION 4
INSTALLATION	SECTION 5
DIMENSIONS	SECTION 6
ORDER CODES	SECTION 7

DIMENSIONS

Frame Reference	TB2 Lite 160	TB2 Lite 250	TB2 S125	TB2 S250	TB2 S/H/L 250	TB2 H/L 400	TB2 E/S 630	
Max. In (A) of Frame	160	250	125	250	250	400	630	
TEMBREAK 2 MOULDED CASE CIRCUIT BREAKERS			S125-NJ S125-GJ	S160-NJ S160-GJ S250-NJ S250-GJ	H125-NJ L125-NJ H160-NJ L160-NJ H250-NJ L250-NJ S250-NE S250-GE S250-PE H250-NE	H400-NE L400-NE	E400-NJ S400-CJ S400-NJ S400-GJ S400-PJ S400-NE S400-GE S400-PE S630-CE E630-NE S630-GE	
TEMBREAK 2 CIRCUIT BREAKERS WITH Icu = 70KA AT 690V Ac					L125-PJ	L400-PE		
TEMBREAK 2 CIRCUIT BREAKERS FOR 1000V Ac			VS125-NJ	VS250-NJ			XV400NE①②	
TEMBREAK 2 LITE SPACE SAVING, MONEY SAVING MOULDED CASE CIRCUIT BREAKERS	E160-SF S160-SCF S160-SF E160-SJ S160-SCJ S160-SJ	E250-SCF E250-SF S250-SF E250-SCJ E250-SJ S250-SJ						
TEMBREAK 2 CIRCUIT BREAKERS WITH INTEGRAL RESIDUAL CURRENT PROTECTION (CBR)			ZE125-NJ ZS125-NJ ZS125-GJ	ZE250-NJ ZS250-NJ ZS250-GJ				
CIRCUIT BREAKERS AND SWITCH-DISCONNECTORS FOR USE ABOVE 250V DC	S160-SD S160-GD S160-SDN	S250-SD S250-GD S250-SDN		PVS160-SDL② PVS160-SDH② PVS160-SNL② PVS160-SNH② PVS250-SDL② PVS250-SDH② PVS250-SNL② PVS250-SNH②		PVS400-NDL PVS400-NDH PVS400-NNL PVS400-NNH	S400-ND	
SWITCH DISCONNECTORS	S160-SN	S250-SN	S125-NN	S250-NN			S400-NN	

CONTENTS | SECTION 6

	TB2 H/L 800	TB2 1000	TB2 1250	TB2 1600	TB 3200	
	800	1000	1250	1600	3200	
	H800-NE L800-NE	S800-CJ S800-NJ S800-RJ S800-NE S800-RE S1000-SE S1000-NE	S1250-SE S1250-NE S1250-GE	S1600-SE S1600-NE	XS2000-NE①② XS2500-NE①② XS3200-NE①②	**TEMBREAK 2 MOULDED CASE CIRCUIT BREAKERS & SWITCH DISCONNECTORS** Pages 225 - 245
	L800-PE					**TEMBREAK 2 CIRCUIT BREAKERS WITH Icu = 70KA AT 690V AC** Pages 246 - 251
		XV630PE①② XV800PE①②	XV1250NE①②			**TEMBREAK 2 MOULDED CASE CIRCUIT BREAKERS FOR 1000V AC** Pages 252 - 253
						TEMBREAK 2 LITE MOULDED CASE CIRCUIT BREAKERS & SWITCH DISCONNECTORS Pages 254 - 258
						TEMBREAK 2 MOULDED CASE CIRCUIT BREAKERS WITH INTEGRAL RESIDUAL CURRENT PROTECTION (CBR) Pages 259 - 260
	PVS800-NDL PVS800-NDH PVS800-NNL PVS800-NNH	S800-ND S1000-ND	XS1250ND*	XS1600ND*	XS2000ND① XS2500ND① XS3200ND①②	**MOULDED CASE CIRCUIT BREAKERS & SWITCH DISCONNECTORS FOR USE ABOVE 250V DC** Pages 261 - 269
		S800-NN	S1250-NN	S1600-NN	XS2000-NN①②	**ACCESSORIES** Pages 270 - 321

①Tembreak 1. Frame sizes vary from Tembreak 2.
②Contact Terasaki for dimensions.

DIMENSIONS

TEMBREAK 2 MOULDED CASE CIRCUIT BREAKERS & SWITCH DISCONNECTORS

S125-NJ, S125-GJ, S125-NN

ASL: Arrangement Standard Line ℄: Handle Frame Centre Line

Front connected

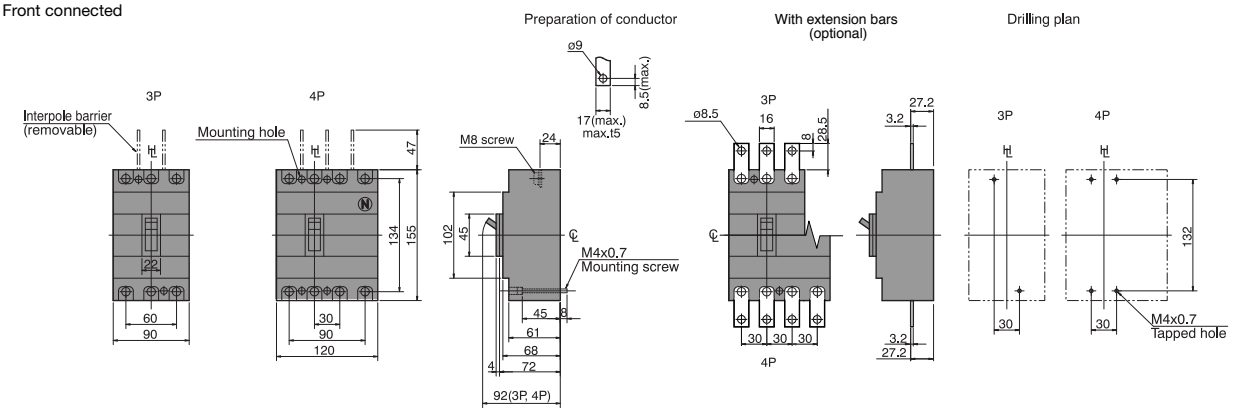

Rear connected

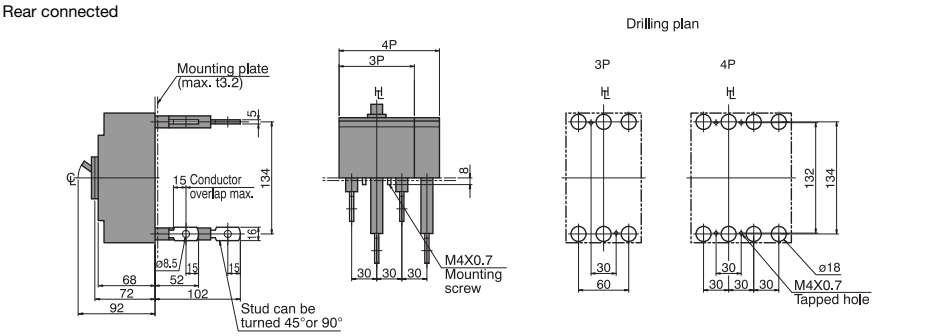

Panel cutout (Front view)

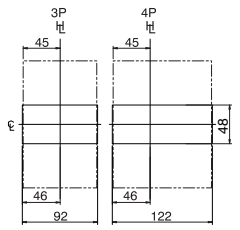

Panel cutout dimensions shown give an allowance of 1.0mm or more around the handle escutcheon.

Front connected with Motor Operator

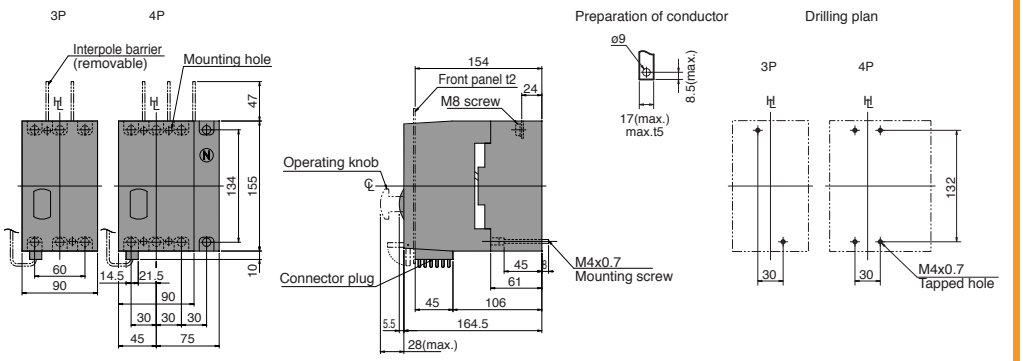

Panel hinge position (hatching area) bottom view

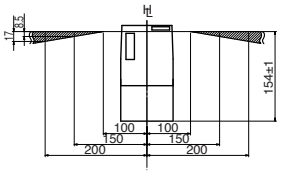

Rear connected with Motor Operator

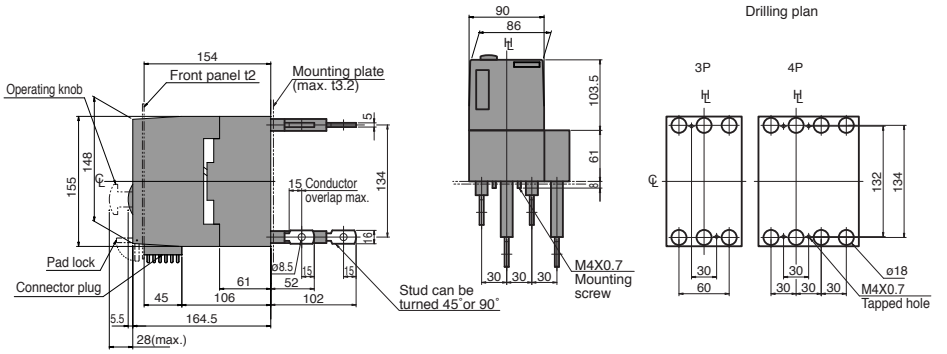

Panel cutout (Front view)

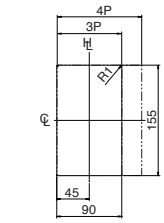

Panel cutout dimensions shown give an allowance of 1.5mm around the handle escutcheon.

TEMBREAK 2 MOULDED CASE CIRCUIT BREAKERS & SWITCH DISCONNECTORS

S125-NJ, S125-GJ, S125-NN Plug in Version

ASL: Arrangement Standard Line ℄: Handle Frame Centre Line

Outline Dimensions

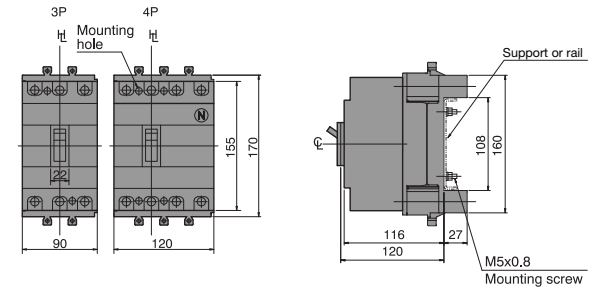

Termination of Busbar

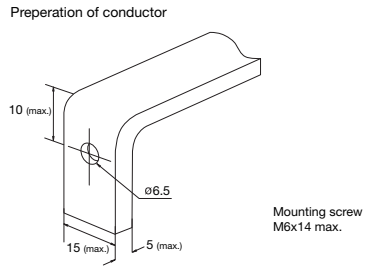

Mounting on a support or rails (shown with optional connection bars oriented for rear access)

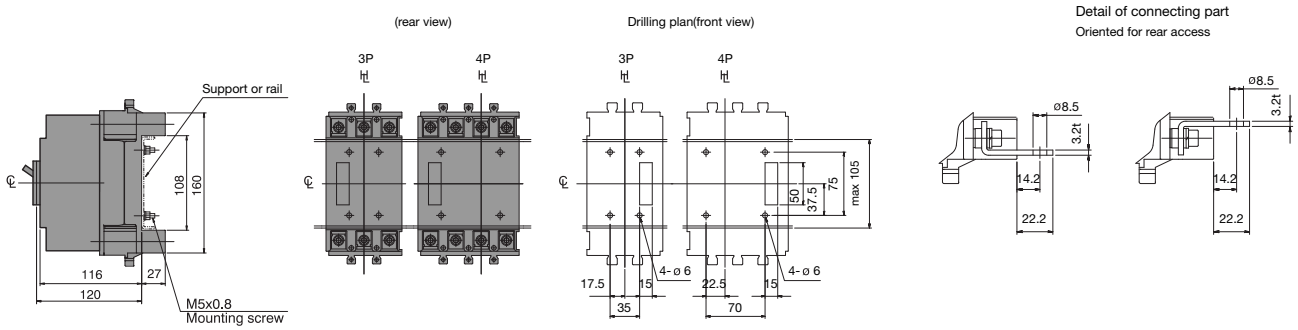

Mounting through the backplate (shown with optional connection bars oriented for rear access)

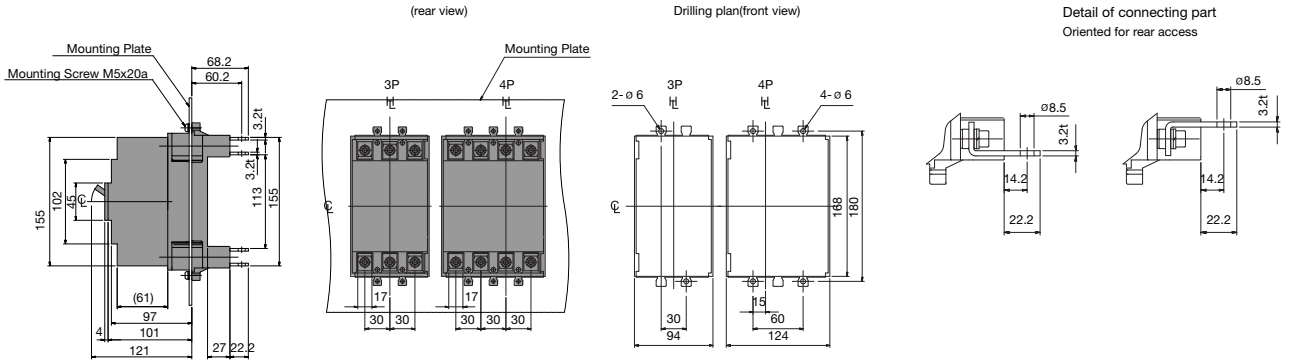

Mounting on the backplate (optional connection bars must be oriented for front access)

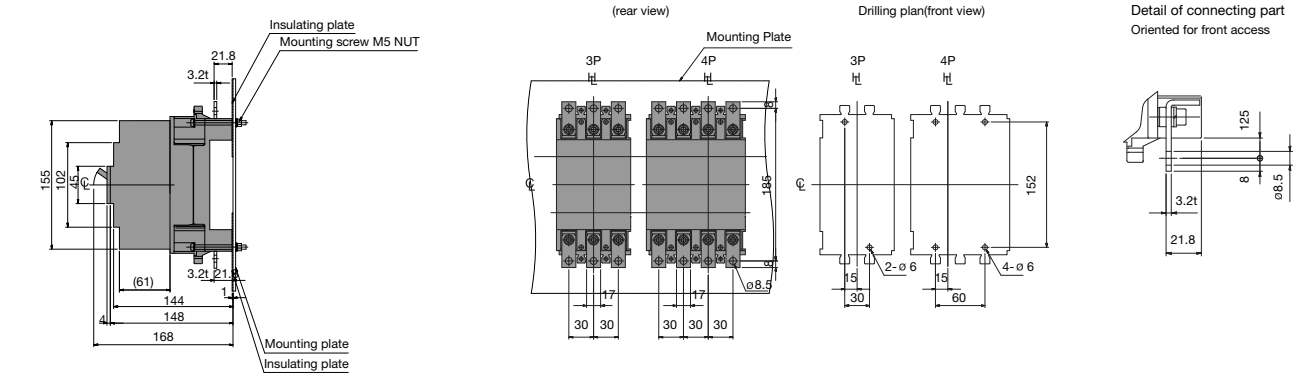

Note that the insulation plate (supplied as standard) must be fitted between the base and the backplate.

DIMENSIONS

TEMBREAK 2 MOULDED CASE CIRCUIT BREAKERS & SWITCH DISCONNECTORS

S160-NJ, S160-GJ, S250-NJ, S250-GJ, S250-NN

ASL: Arrangement Standard Line ℄: Handle Frame Centre Line

Front connected

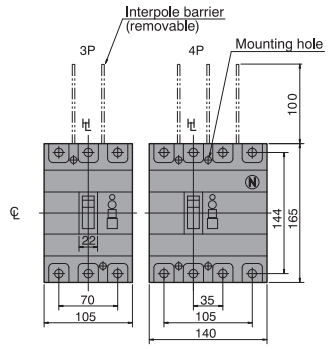

Preparation of conductor

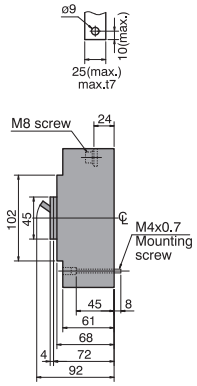

With extension bars (optional)

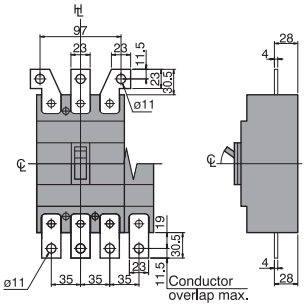

Drilling plan

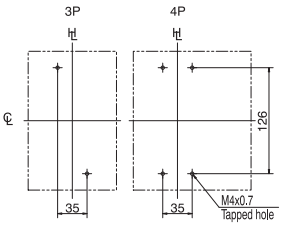

Rear connected

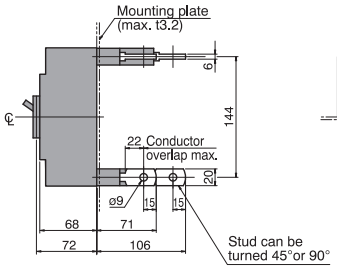

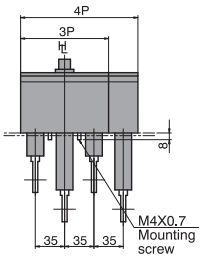

Drilling plan

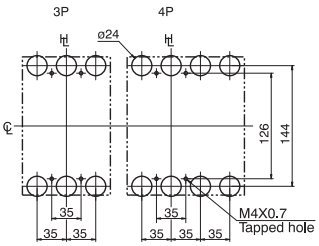

Panel cutout (Front view)

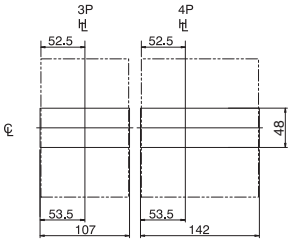

Panel cutout dimensions shown give an allowance of 1.0mm or more around the handle escutcheon.

Front connected with Motor Operator

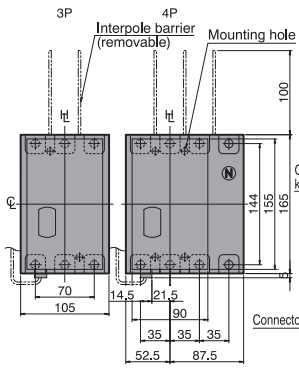

Preparation of conductor

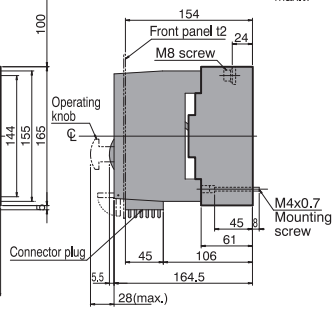

Drilling plan

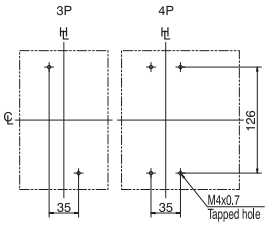

Panel hinge position (hatching area) bottom view

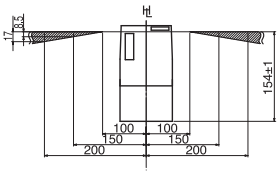

Rear connected with Motor Operator

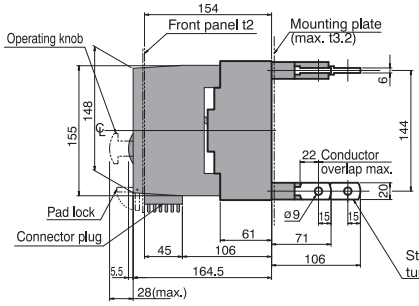

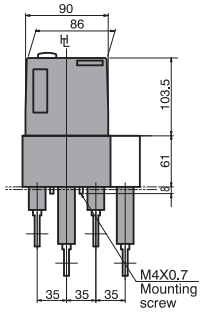

Drilling plan

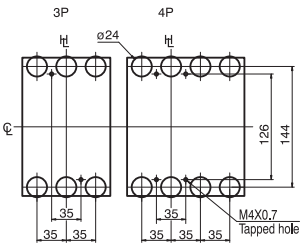

Panel cutout (Front view)

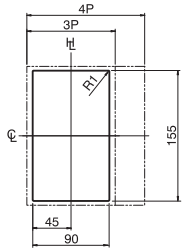

Panel cutout dimensions shown give an allowance of 1.5mm around the handle escutcheon.

TEMBREAK 2 MOULDED CASE CIRCUIT BREAKERS & SWITCH DISCONNECTORS

S160-NJ, S160-GJ, S250-NJ, S250-GJ, S250-NN Plug-in Versions

ASL: Arrangement Standard Line ℄: Handle Frame Centre Line

Outline Dimensions

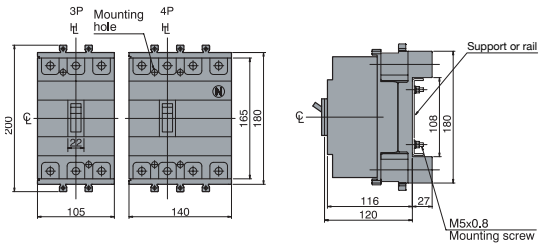

Termination of Busbar

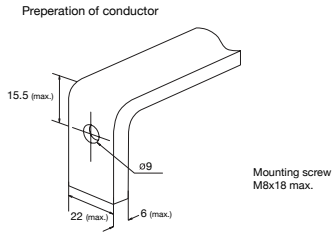

Mounting on a support or rails (shown with optional connection bars oriented for rear access)

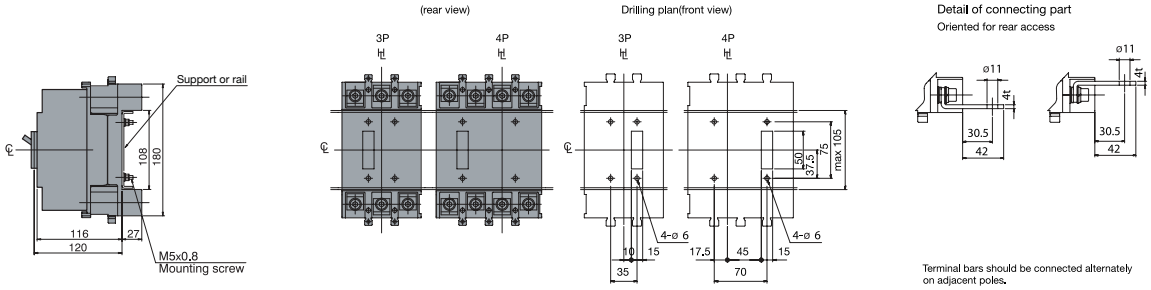

Mounting through the backplate (shown with optional connection bars oriented for rear access)

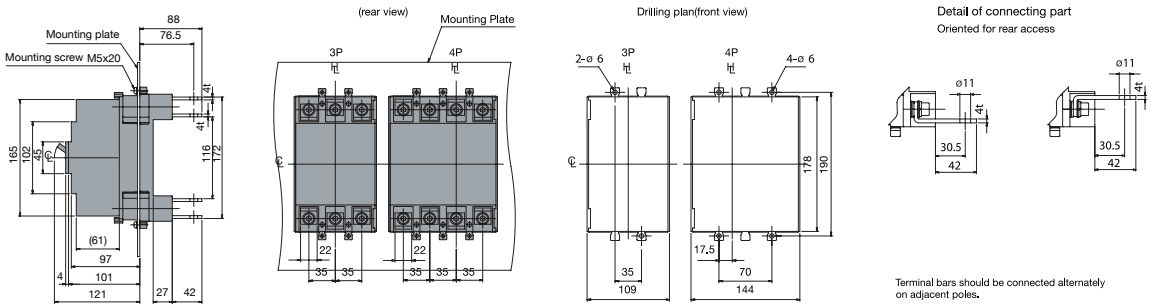

Mounting on the backplate (optional connection bars must be oriented for front access)

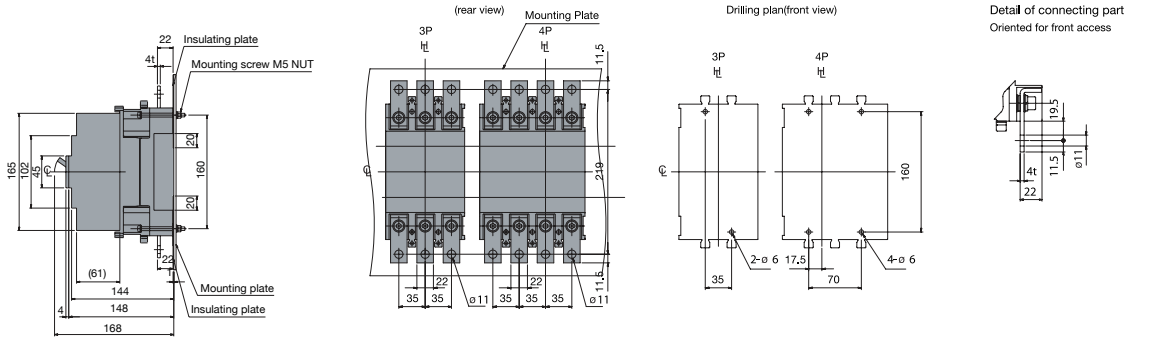

SECTION 6

DIMENSIONS

TEMBREAK 2 MOULDED CASE CIRCUIT BREAKERS & SWITCH DISCONNECTORS

H125-NJ, L125-NJ, H160-NJ, L160-NJ, S250-NE, S250-GE, S250-PE, H250-NJ, H250-NE, L250-NJ

ASL: Arrangement Standard Line ℍ: Handle Frame Centre Line

Front connected

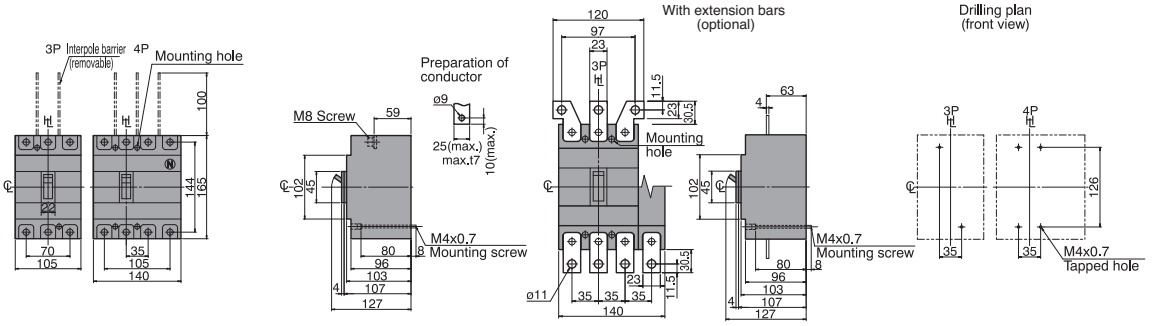

Rear connected

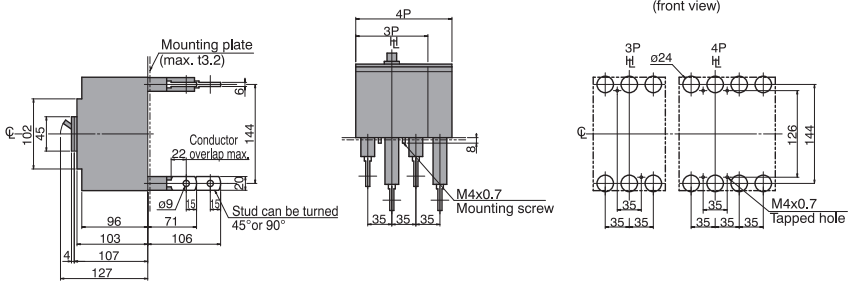

Panel cutout (front view)

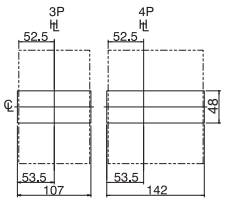

Panel cutout dimensions shown give an allowance of 1.0mm or more around the handle escutcheon.

Front connected with Motor Operator

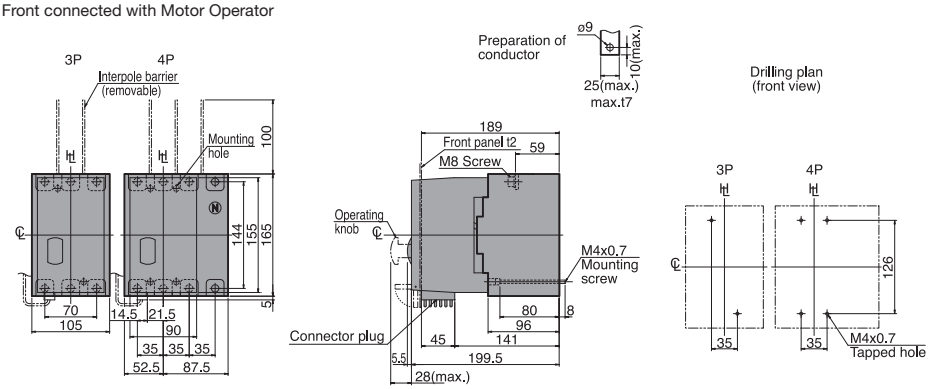

Panel hinge position (hatching area) bottom view

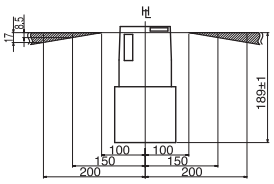

Rear connected with Motor Operator

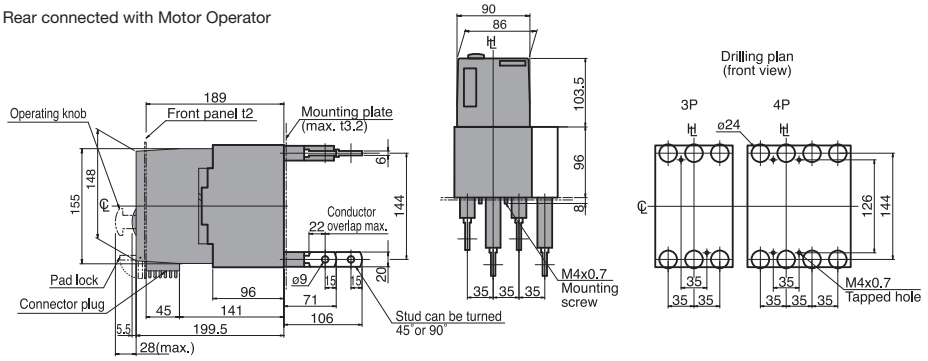

Panel cutout (front view)

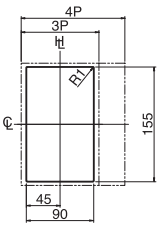

Panel cutout dimensions shown give an allowance of 1.5mm around the handle escutcheon.

TEMBREAK 2 MOULDED CASE CIRCUIT BREAKERS & SWITCH DISCONNECTORS

H125-NJ, L125-NJ, H160-NJ, L160-NJ, S250-NE, S250-GE, H250-NJ, L250-NJ. Plug-in Versions

ASL: Arrangement Standard Line ℄: Handle Frame Centre Line

Outline Dimensions

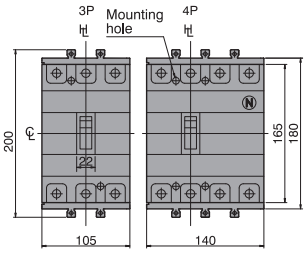

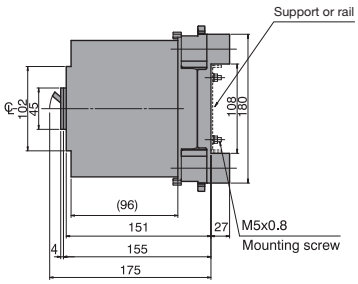

Termination of Busbar

Preperation of conductor

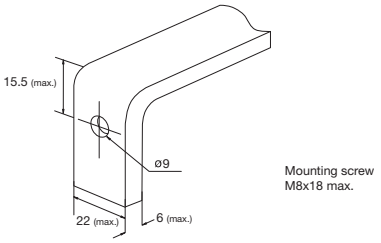

Mounting on a support or rails (shown with optional connection bars oriented for rear access)

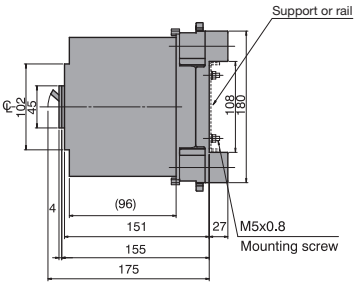

(rear view)

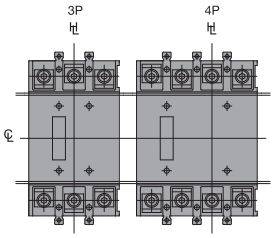

Drilling plan(front view)

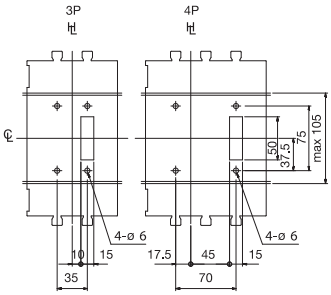

Detail of connecting part

Oriented for rear access

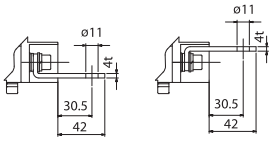

Terminal bars should be connected alternately on adjacent poles.

Mounting through the backplate (shown with optional connection bars oriented for rear access)

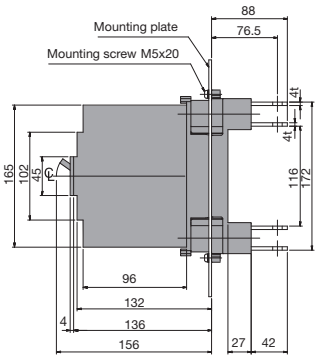

(rear view)

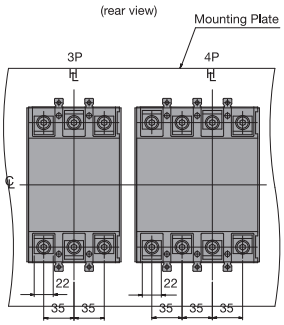

Drilling plan(front view)

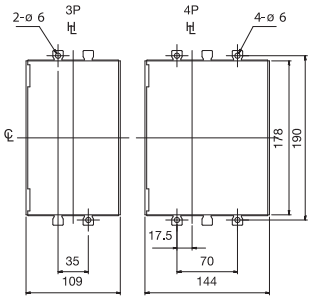

Detail of connecting part

Oriented for rear access

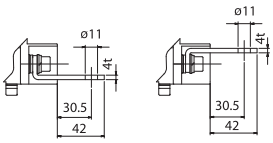

Terminal bars should be connected alternately on adjacent poles.

Mounting on the backplate (optional connection bars must be oriented for front access)

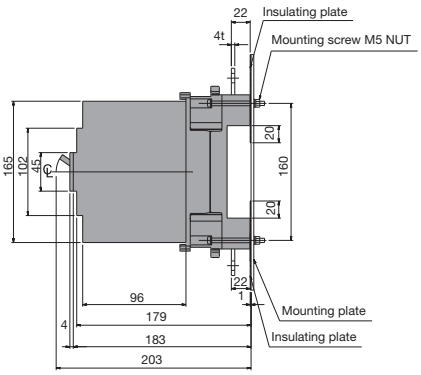

(rear view)

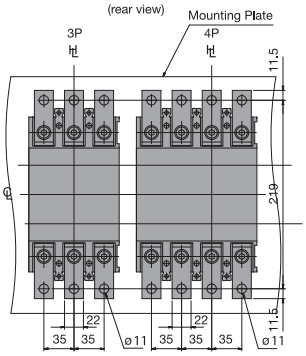

Drilling plan(front view)

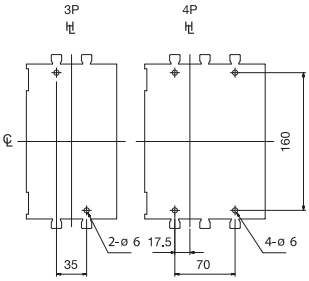

Detail of connecting part

Oriented for front access

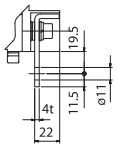

DIMENSIONS

TEMBREAK 2 MOULDED CASE CIRCUIT BREAKERS & SWITCH DISCONNECTORS

S250-NE, S250-GE, S250-PE, H250-NE with Communication Module

ASL: Arrangement Standard Line ℄: Handle Frame Centre Line

Front connected

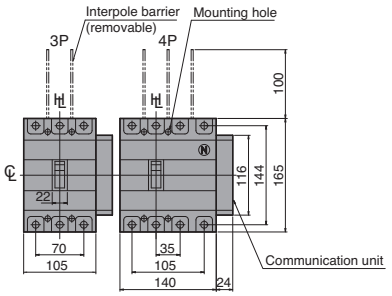

Preparation of conductor

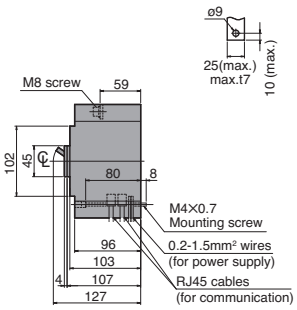

Drilling plan (front view)

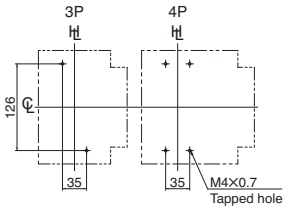

Rear connected

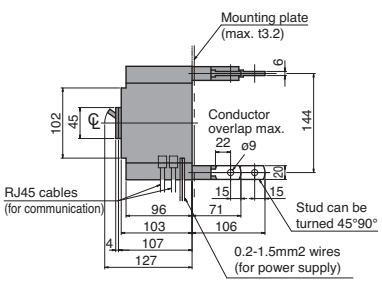

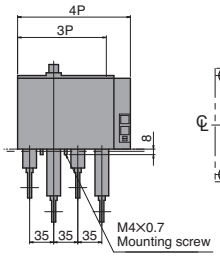

Drilling plan (front view)

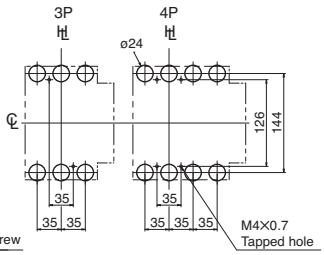

Panel cutout (front view)

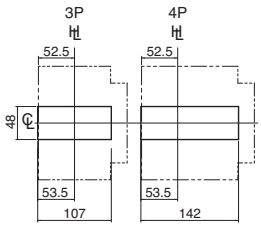

Panel cutout dimensions shown give an allowance of 1.0mm or more around the handle escutcheon.

Plug-in (except S250-PE & H250-NE)

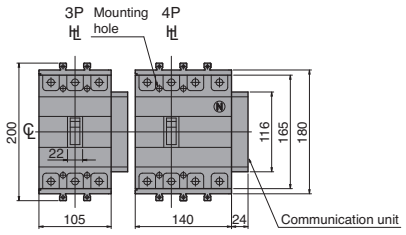

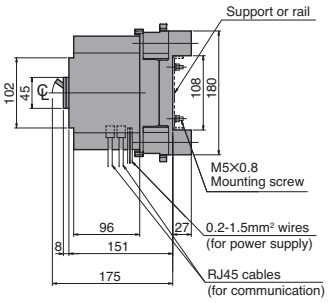

Termination of Busbar

Preperation of conductor

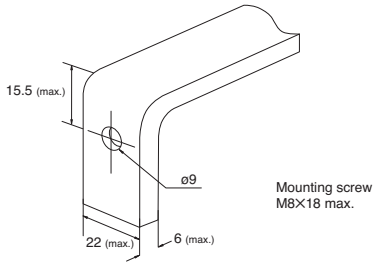

Mounting on a support or rails (shown with optional connection bars oriented for rear access)

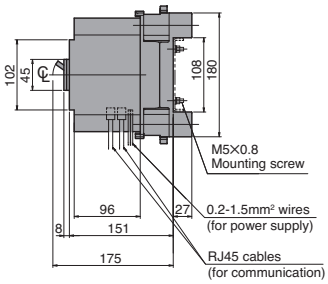

(rear view)

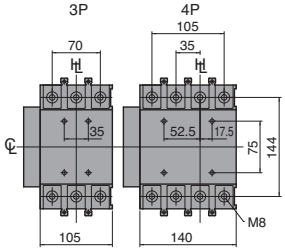

Drilling plan (front view)

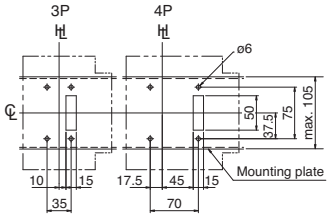

Detail of connecting part Oriented for rear access

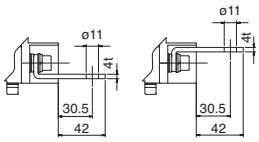

Terminal bars should be connected alternately on adjacent poles.

TEMBREAK 2 MOULDED CASE CIRCUIT BREAKERS & SWITCH DISCONNECTORS

E400-NJ, S400-CJ, S400-NJ, S400-NE, S400-GJ, S400-GE, S400-PJ, S400-PE, S400-NN

ASL: Arrangement Standard Line ℄: Handle Frame Centre Line

Front connected

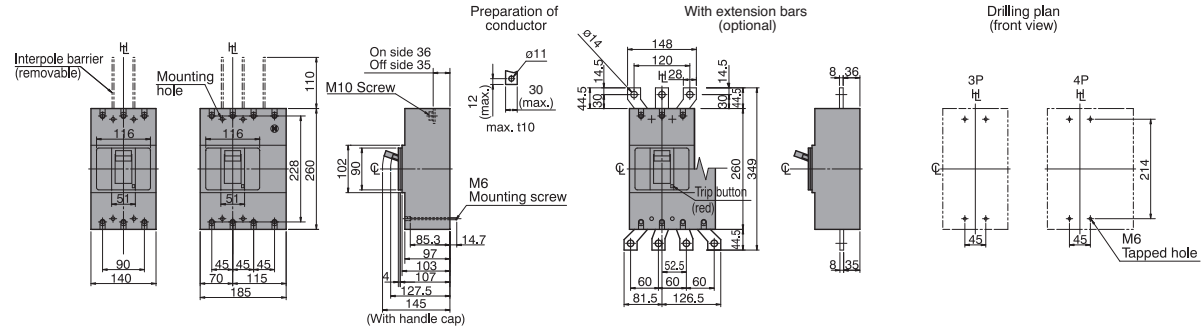

Rear connected

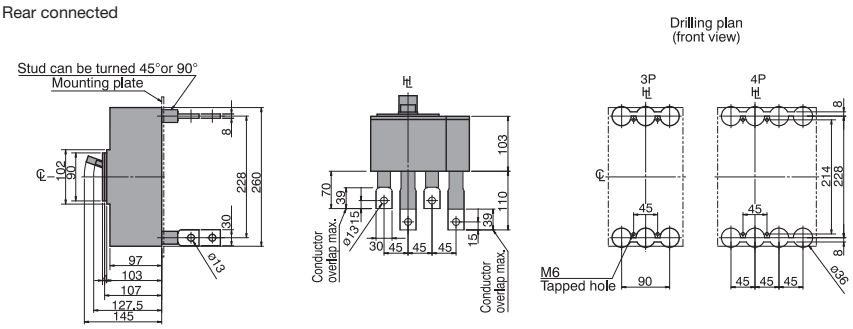

Panel cutout (front view)

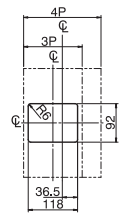

Panel cutout dimensions shown give an allowance of 1.0mm around the handle escutcheon.

Front connected with Motor Operator

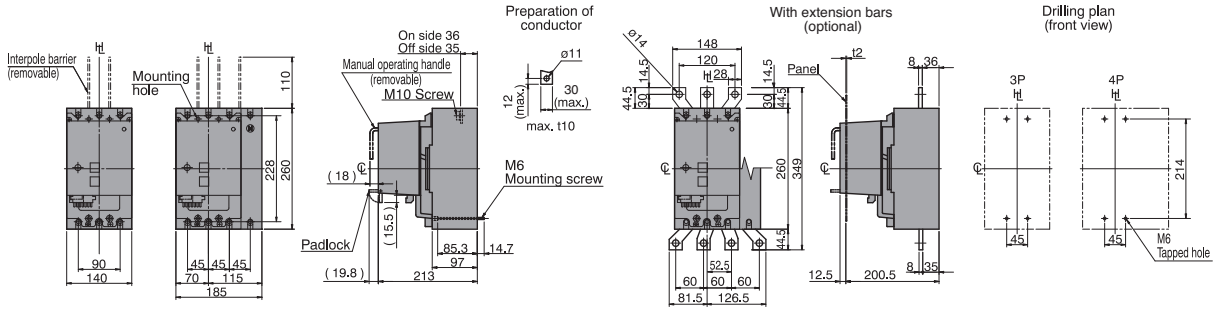

Rear connected with Motor Operator

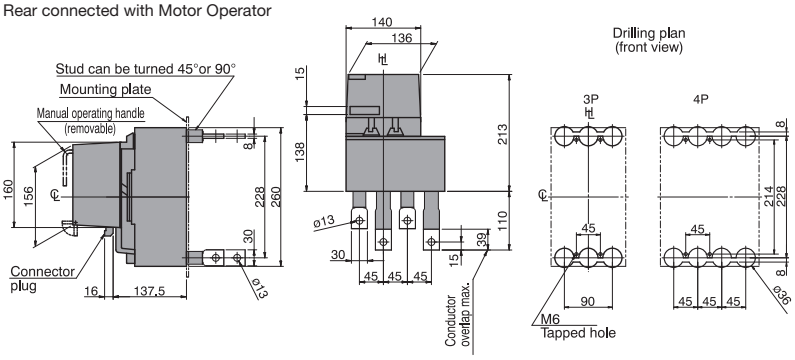

Panel cutout (front view)

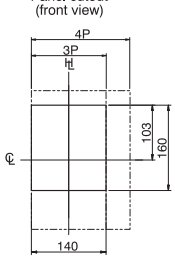

Panel hinge position (hatching area)

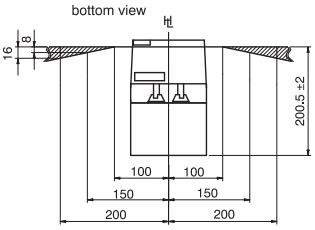

Panel cutout dimensions shown give an allowance of 1.5mm around motor operator

DIMENSIONS

TEMBREAK 2 MOULDED CASE CIRCUIT BREAKERS & SWITCH DISCONNECTORS

E400-NJ, S400-CJ, S400-NJ, S400-NE, S400-GJ, S400-GE, S400-PJ, S400-PE Plug-in Version

ASL: Arrangement Standard Line ℄: Handle Frame Centre Line

Outline Dimensions

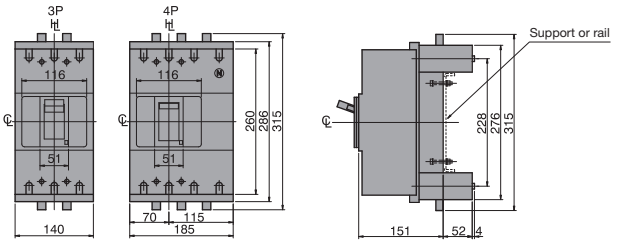

Termination of Busbar

Preperation of conductor

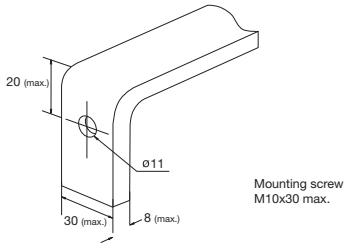

Mounting on a support or rails (shown with optional connection bars oriented for rear access)

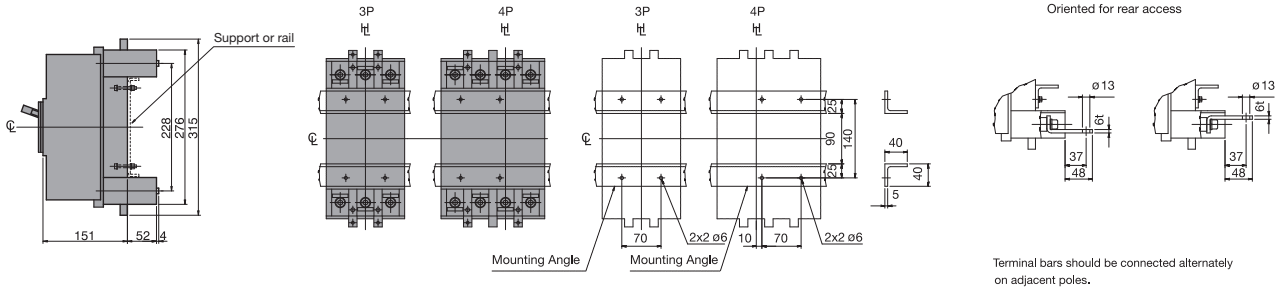

Mounting through the backplate (shown with optional connection bars oriented for rear access)

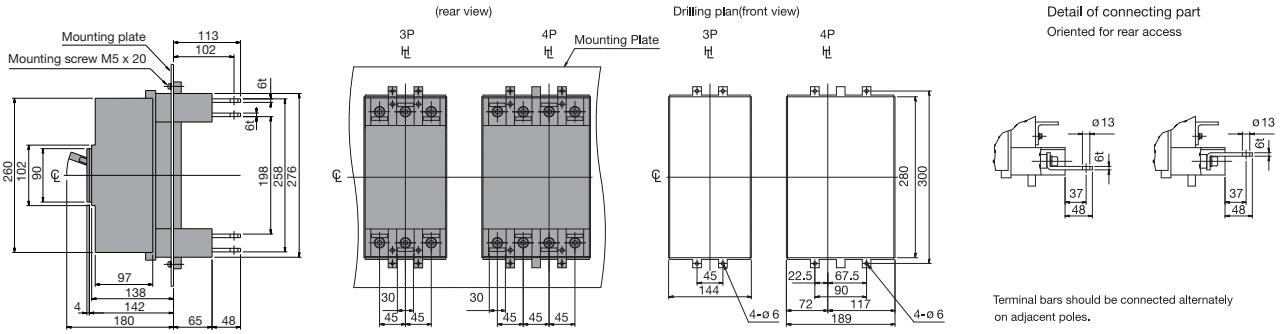

Mounting on the backplate (optional connection bars must be oriented for front access)

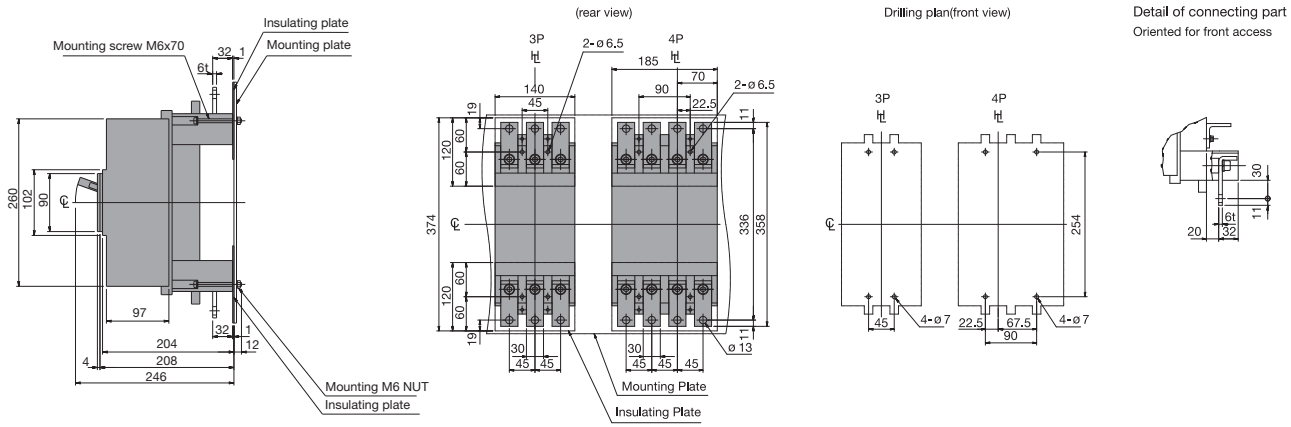

TEMBREAK 2 MOULDED CASE CIRCUIT BREAKERS & SWITCH DISCONNECTORS

H400-NE, L400-NE

ASL: Arrangement Standard Line ℄: Handle Frame Centre Line

Front connected

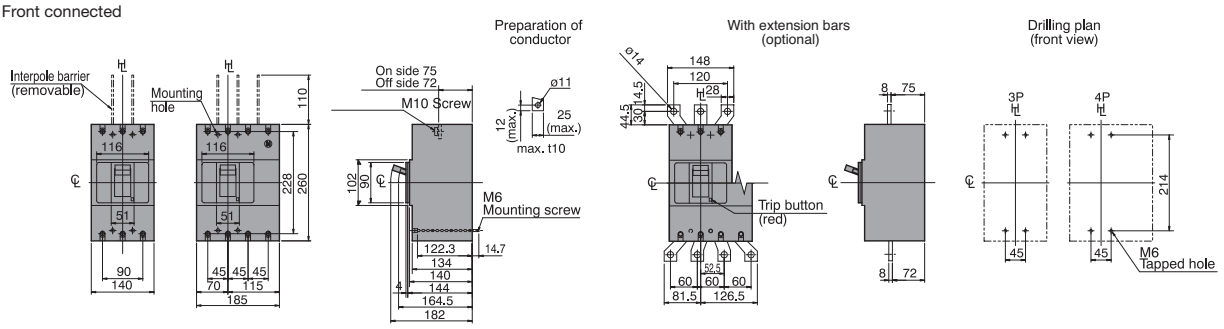

Rear connected

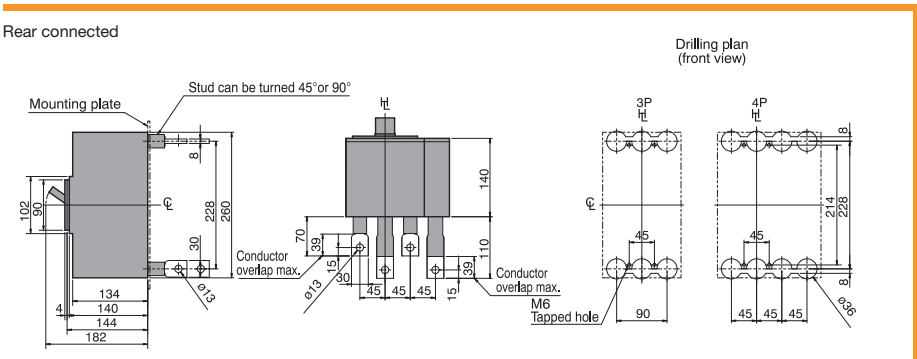

Panel cutout (front view)

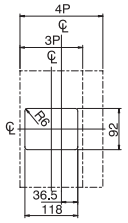

Panel cutout dimensions shown give an allowance of 1.0mm around the handle escutcheon.

Front connected with Motor Operator

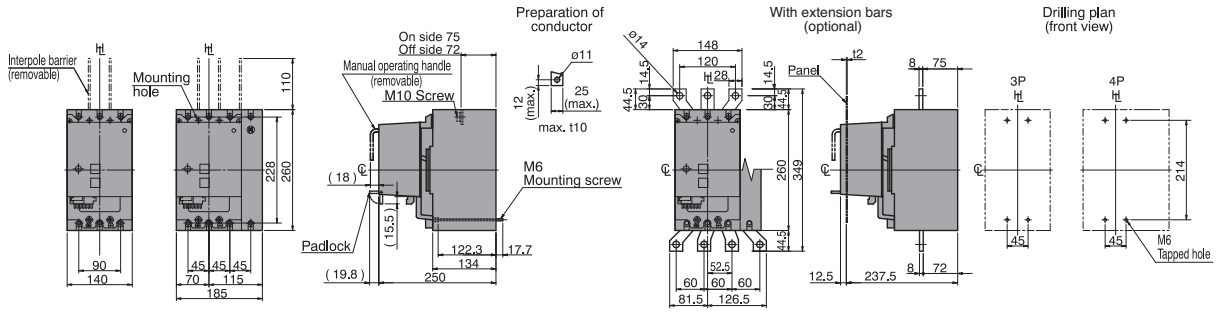

Rear connected with Motor Operator

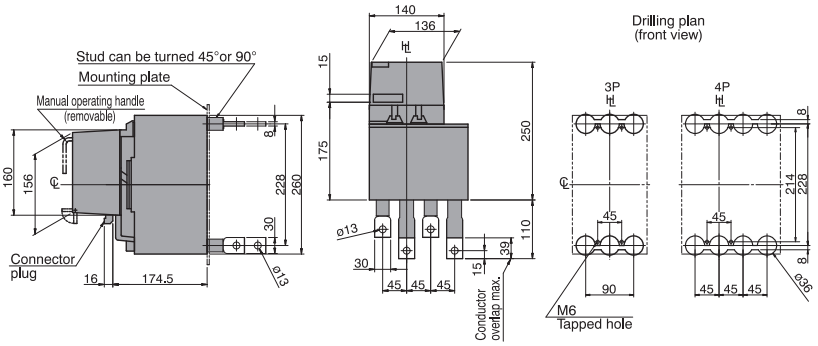

Panel cutout (front view)

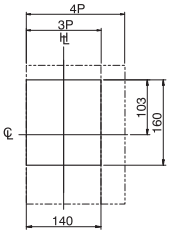

Panel hinge position (hatching area)

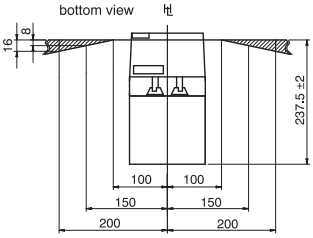

Panel cutout dimensions shown give an allowance of 1.5mm around motor operator

SECTION 6

DIMENSIONS

TEMBREAK 2 MOULDED CASE CIRCUIT BREAKERS & SWITCH DISCONNECTORS

H400-NE, L400-NE. Plug-in Versions

ASL: Arrangement Standard Line ⊢⊣: Handle Frame Centre Line

Outline Dimensions

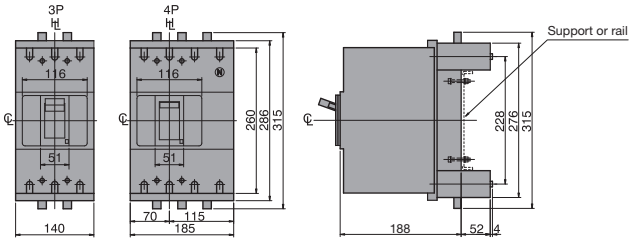

Termination of Busbar

Preperation of conductor

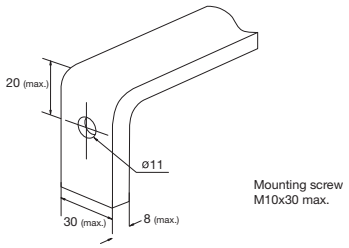

Mounting on a support or rails (shown with optional connection bars oriented for rear access)

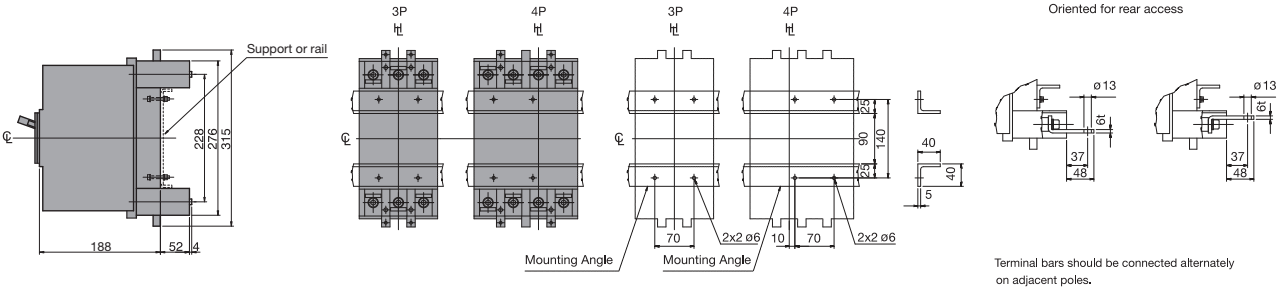

Mounting through the backplate (shown with optional connection bars oriented for rear access)

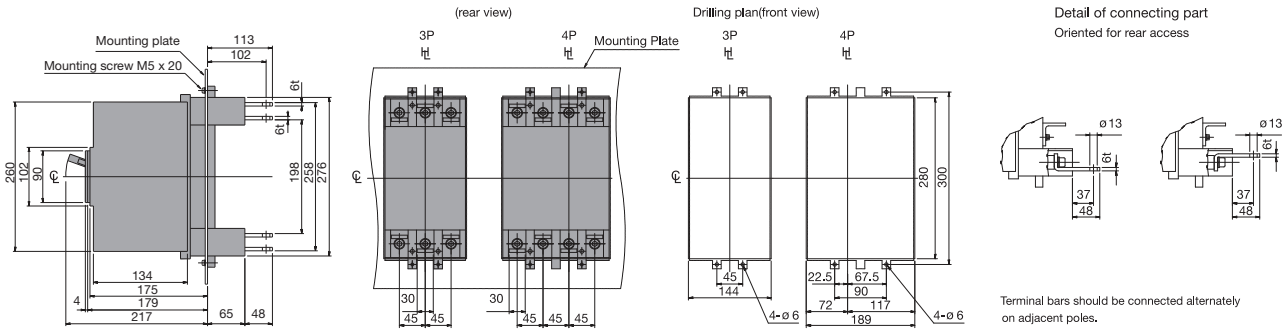

Mounting on the backplate (optional connection bars must be oriented for front access)

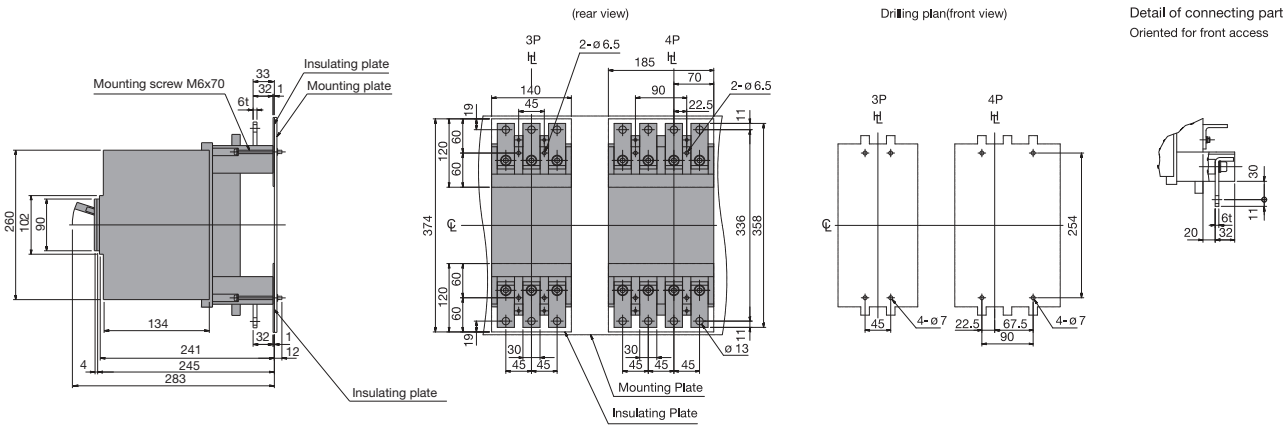

TEMBREAK 2 MOULDED CASE CIRCUIT BREAKERS & SWITCH DISCONNECTORS

E630-NE, S630-CE, S630-GE, S630-NN

ASL: Arrangement Standard Line ℄: Handle Frame Centre Line

Front connected

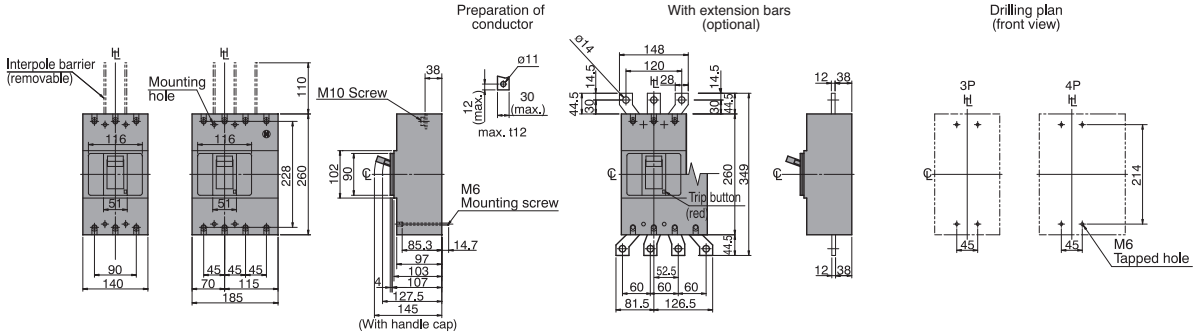

Rear connected

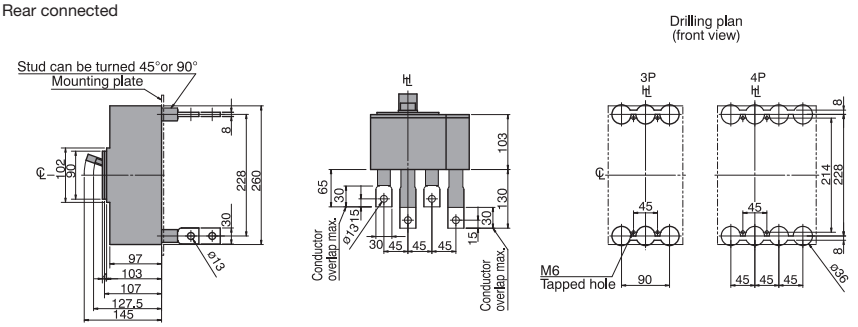

Panel cutout (front view)

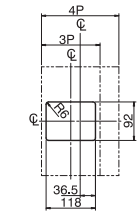

Panel cutout dimensions shown give an allowance of 1.0mm around the handle escutcheon.

SECTION 6

DIMENSIONS

TEMBREAK 2 MOULDED CASE CIRCUIT BREAKERS & SWITCH DISCONNECTORS

E630-NE, S630-CE, S630-GE, S630-NN with Motor Operators

ASL: Arrangement Standard Line ℄: Handle Frame Centre Line

Front connected

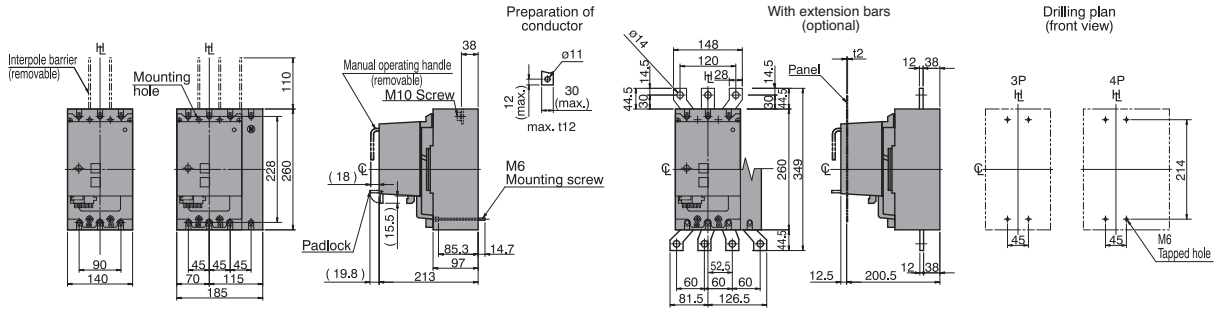

Rear connected with Motor Operator

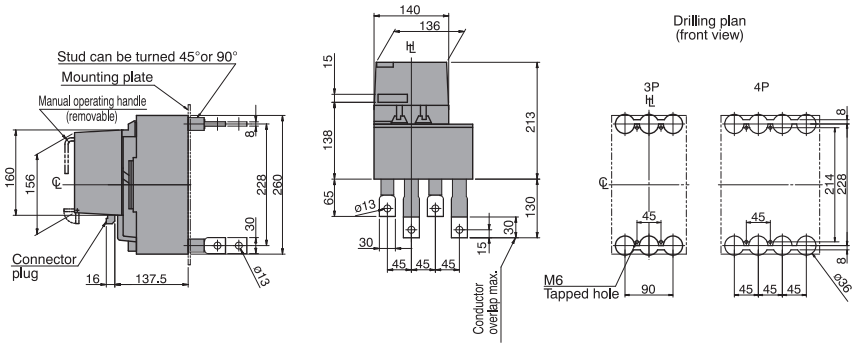

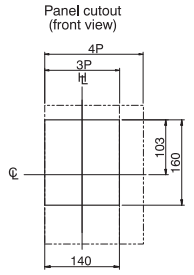

Panel cutout dimensions shown give an allowance of 1.5mm around motor operator

Panel hinge position (hatching area)

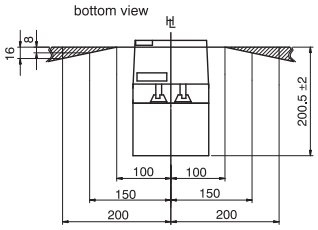

TEMBREAK 2 MOULDED CASE CIRCUIT BREAKERS & SWITCH DISCONNECTORS

S800-CJ, S800-NJ, S800-RJ, S800-NE, S800-RE, S800-NN

ASL: Arrangement Standard Line ℄: Handle Frame Centre Line

Front connected with extension bars (optional)

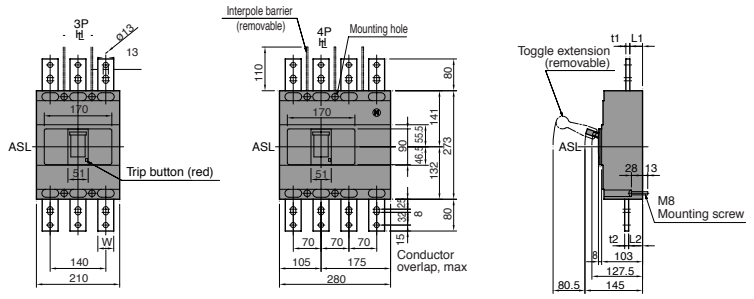

Drilling plan (front view)

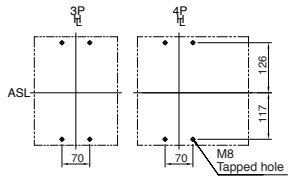

Breaker Type	Rated Current	t1	t2	L1	L2	W
S800-CJ, S800-NJ	630A	8	8	32	34	40
S800-RJ, S800-NN	800A	10	10	32	35	40
S800-NE, S800-RE	630A	8	8	32	36	40
	800A	10	10	32	36	40

Rear connected

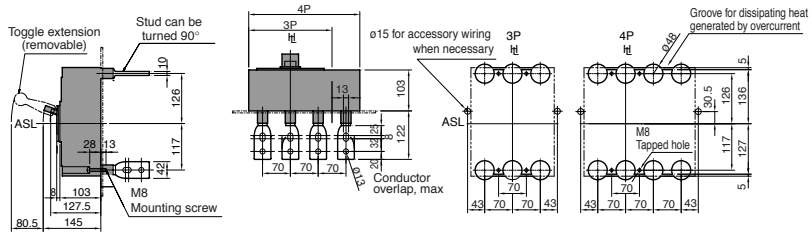

Drilling plan (front view)

Note: Studs are factory installed in horizontal direction both on the line and load sides.

Panel cutout (front view)

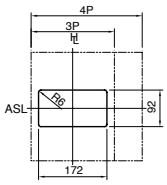

Panel cutout dimensions shown give an allowance of 1.0mm around the handle escutcheon.

Front connected with Motor Operator

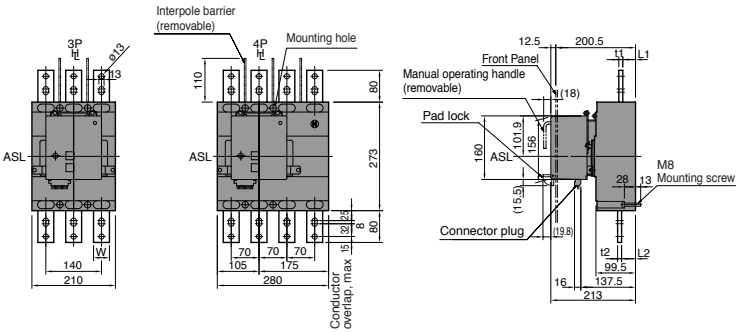

Drilling plan (front view)

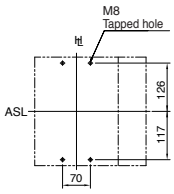

Panel cutout (front view)

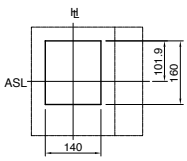

Panel cutout dimensions shown give an allowance of 1.5mm around motor operator.

Rear connected with Motor Operator

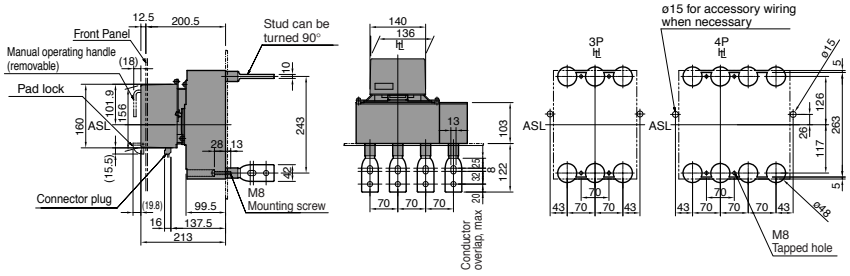

Drilling plan (front view)

Note: Studs are factory installed in horizontal direction both on the line and load sides.

Panel hinge position (hatching area) (bottom view)

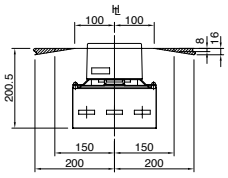

SECTION 6

DIMENSIONS

TEMBREAK 2 MOULDED CASE CIRCUIT BREAKERS & SWITCH DISCONNECTORS

S800-CJ, S800-NJ, S800-RJ, S800-NE, S800-RE. Plug-in Versions

ASL: Arrangement Standard Line ℄: Handle Frame Centre Line

Outline Dimensions

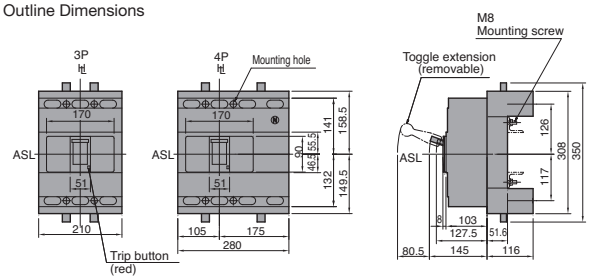

Termination of Busbar

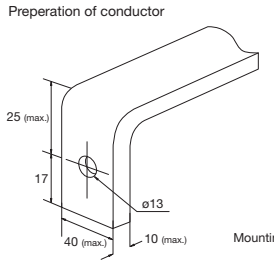

Mounting screw M12×25 max. Hex. sec. head bolt.

Mounting on a support or rails

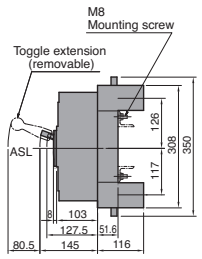

Mounting base
(rear view)

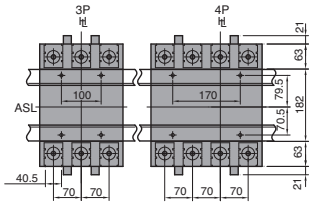

Drilling plan
(front view)

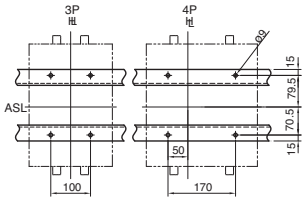

Detail of connecting part
Oriented for rear access

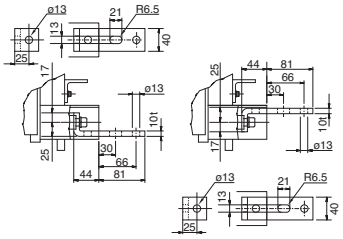

Terminal bars should be connected alternately on adjacent poles.

Mounting through the backplate (shown with optional connection bars oriented for rear access)

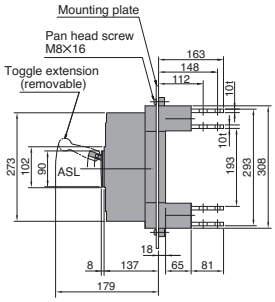

(rear view)

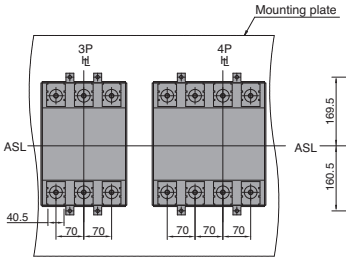

Drilling plan (front view)

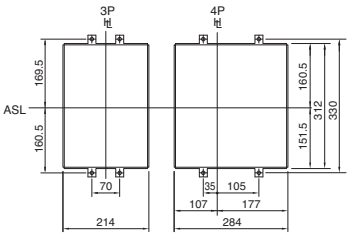

Detail of connecting part
Oriented for rear access

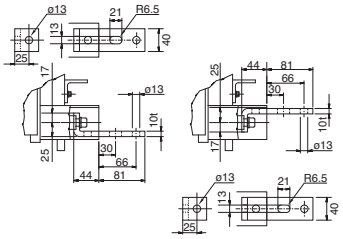

Terminal bars should be connected alternately on adjacent poles.

Mounting on the backplate (optional connection bars must be oriented for front access)

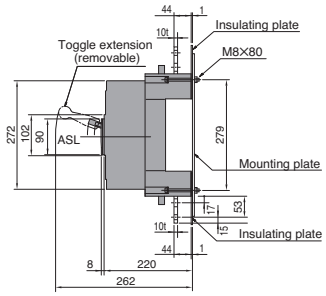

(rear view)

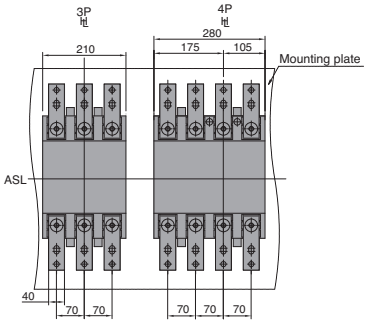

Drilling plan (front view)

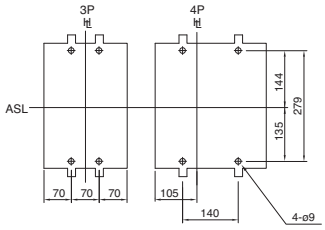

Detail of connecting part
Oriented for front access

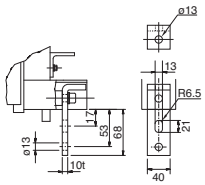

TEMBREAK 2 MOULDED CASE CIRCUIT BREAKERS & SWITCH DISCONNECTORS

H800-NE, L800-NE

ASL: Arrangement Standard Line ℄: Handle Frame Centre Line

Front connected

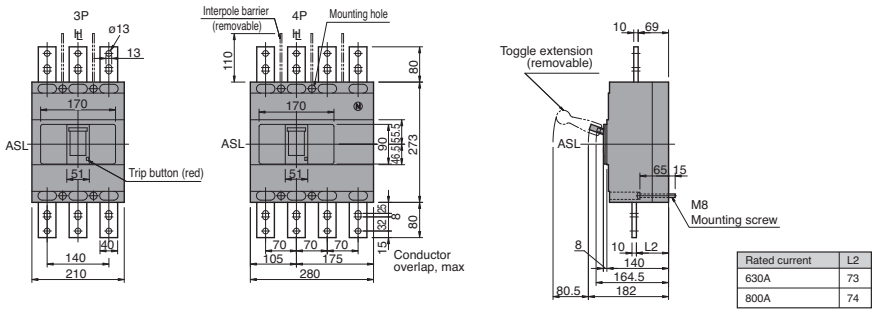

Rated current	L2
630A	73
800A	74

Drilling plan (front view)

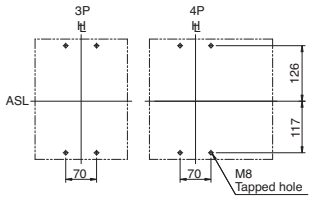

Rear connected

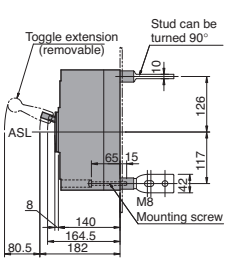

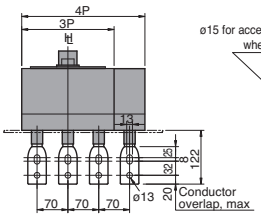

Drilling plan (front view)

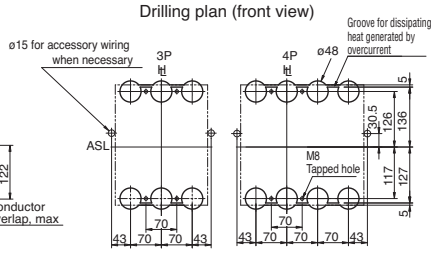

Note: Studs are factory installed in horizontal direction both on the line and load sides.

Panel cutout (front view)

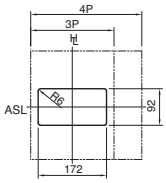

Panel cutout dimensions shown give an allowance of 1.0mm around the handle escutcheon.

Front connected with Motor Operator

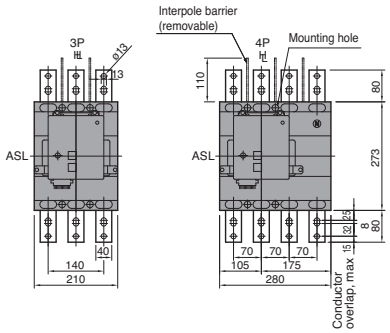

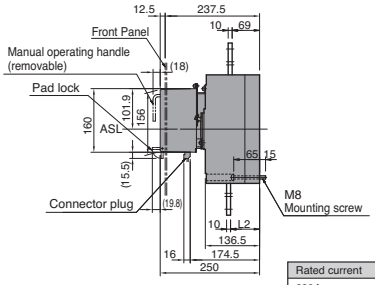

Rated current	L2
630A	73
800A	74

Drilling plan (front view)

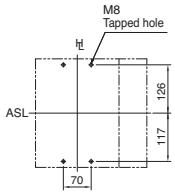

Panel cutout (front view)

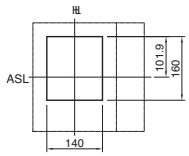

Panel cutout dimensions shown give an allowance of 1.5mm around motor operator.

Rear connected with Motor Operator

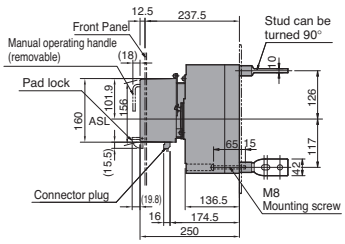

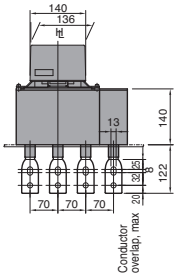

Drilling plan (front view)

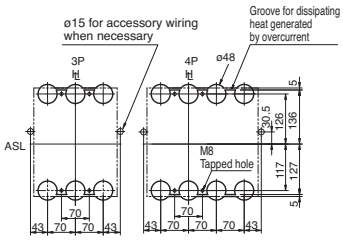

Note: Studs are factory installed in horizontal direction both on the line and load sides.

Panel hinge position (hatching area) (bottom view)

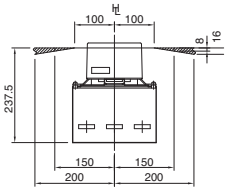

SECTION 6

DIMENSIONS

TEMBREAK 2 MOULDED CASE CIRCUIT BREAKERS & SWITCH DISCONNECTORS

H800-NE, L800-NE. Plug-in Versions

ASL: Arrangement Standard Line ℄: Handle Frame Centre Line

Outline Dimensions

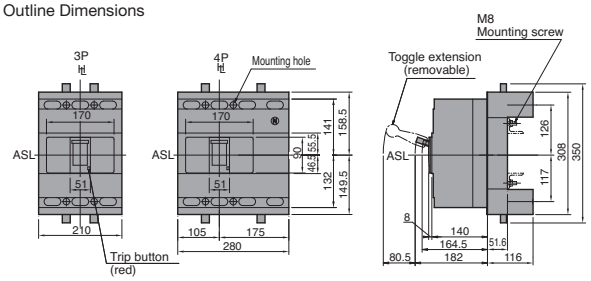

Termination of Busbar

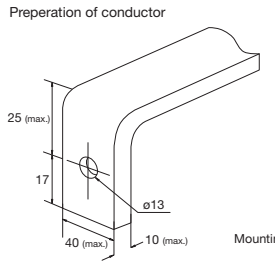

Mounting screw M12×25 max. Hex. sec. head bolt.

Mounting on a support or rails

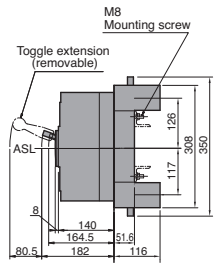

Mounting base
(rear view)

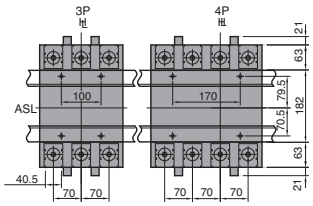

Drilling plan
(front view)

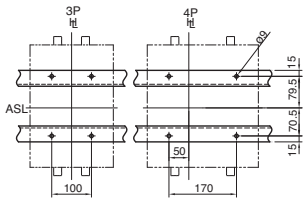

Detail of connecting part
Oriented for rear access

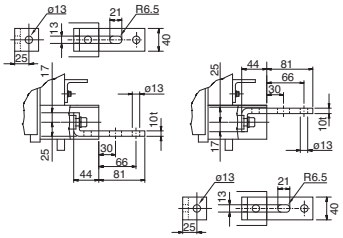

Terminal bars should be connected alternately on adjacent poles.

Mounting through the backplate (shown with optional connection bars oriented for rear access)

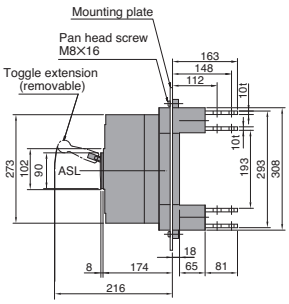

(rear view)

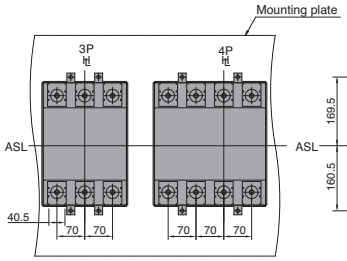

Drilling plan (front view)

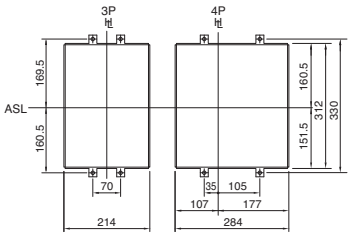

Detail of connecting part
Oriented for rear access

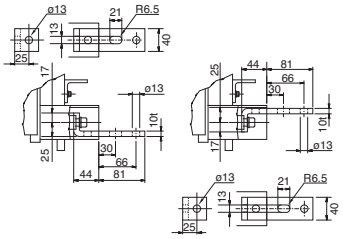

Terminal bars should be connected alternately on adjacent poles.

Mounting on the backplate (optional connection bars must be oriented for front access)

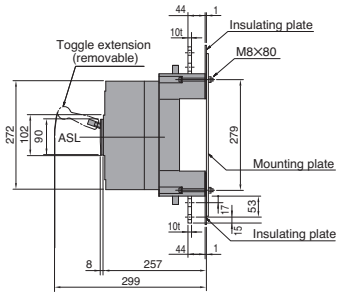

(rear view)

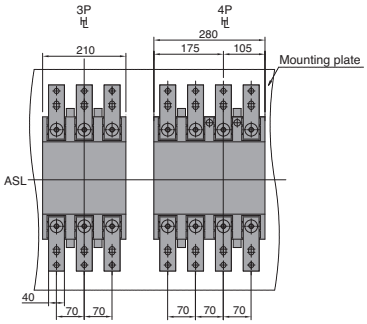

Drilling plan (front view)

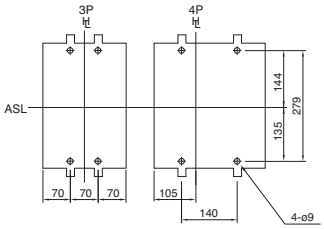

Detail of connecting part
Oriented for front access

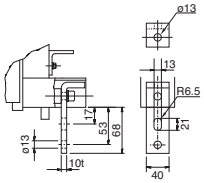

TEMBREAK 2 MOULDED CASE CIRCUIT BREAKERS & SWITCH DISCONNECTORS

S1000-SE, S1000-NE, S1000-NN

ASL: Arrangement Standard Line ℄: Handle Frame Centre Line

Front connected

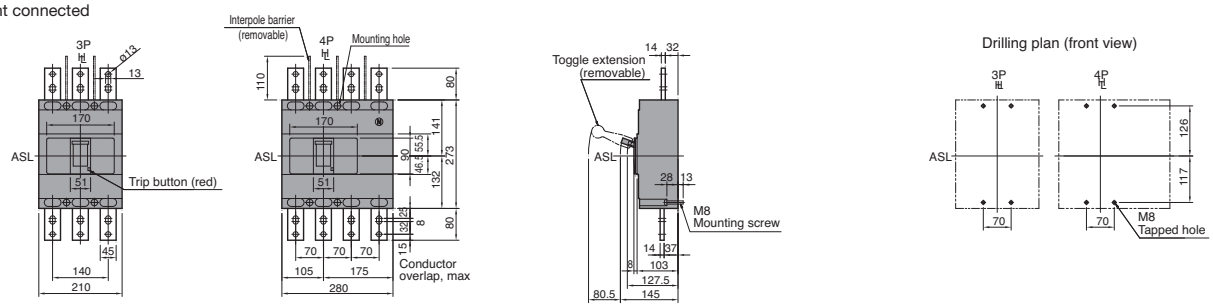

Rear connected

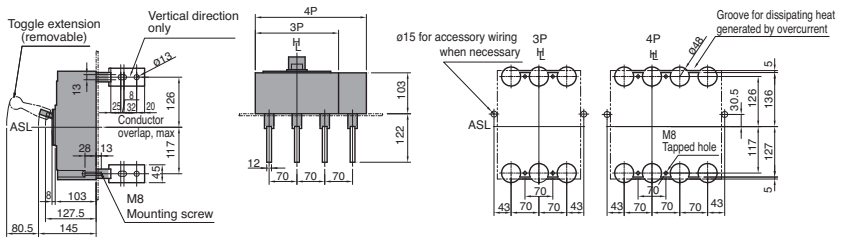

Panel cutout (front view)

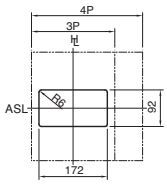

Panel cutout dimensions shown give an allowance of 1.0mm around the handle escutcheon.

Front connected with Motor Operator

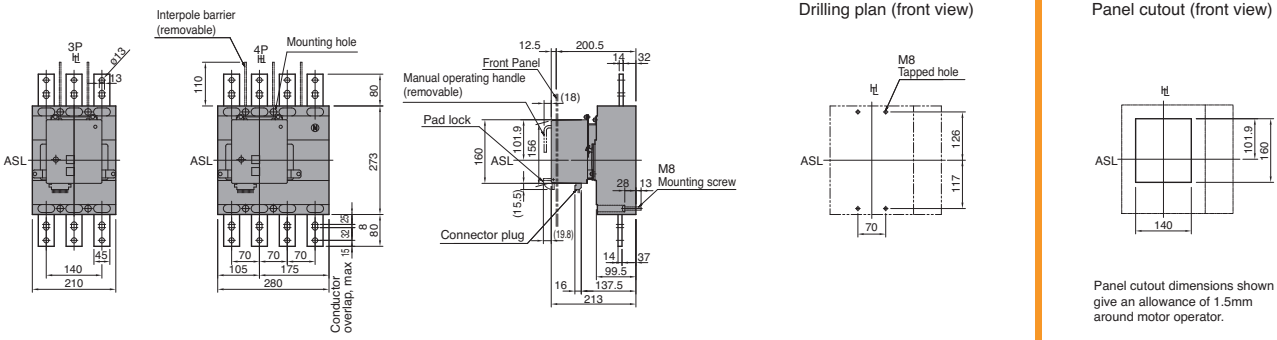

Panel cutout (front view)

Panel cutout dimensions shown give an allowance of 1.5mm around motor operator.

Rear connected with Motor Operator

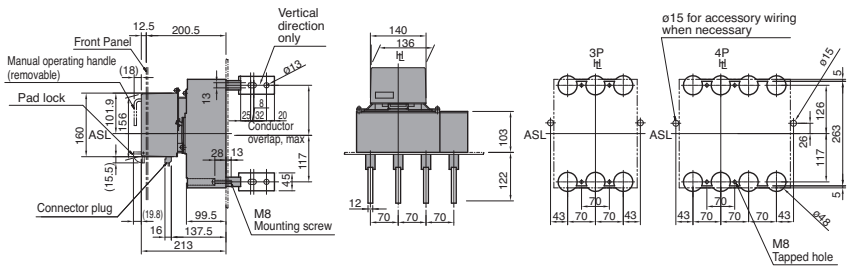

Note: Studs are factory installed in horizontal direction both on the line and load sides.

Panel hinge position (hatching area) (bottom view)

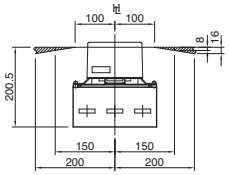

SECTION 6

DIMENSIONS

TEMBREAK 2 MOULDED CASE CIRCUIT BREAKERS & SWITCH DISCONNECTORS

S1250-SE, S1250-NE, S1250-GE, S1250-NN

ASL: Arrangement Standard Line ℄: Handle Frame Centre Line

Front connected

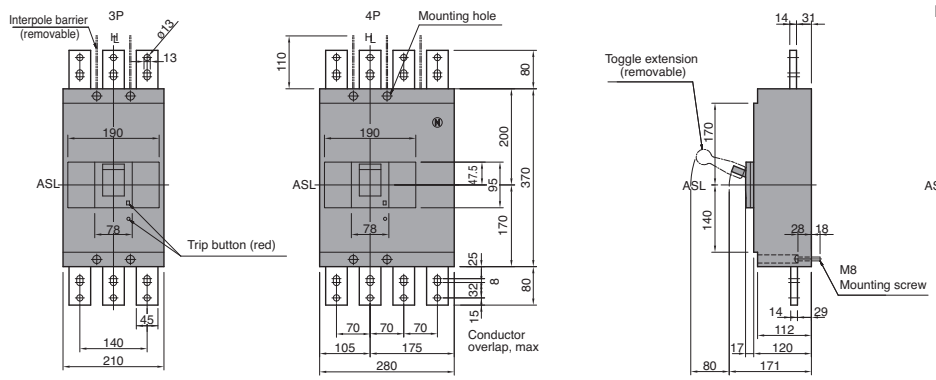

Drilling plan (front view)

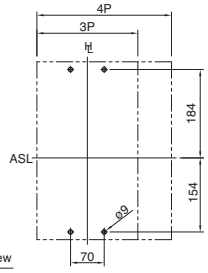

Rear connected

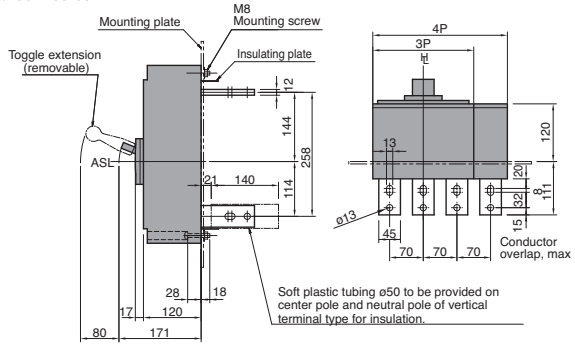

Drilling plan (front view)

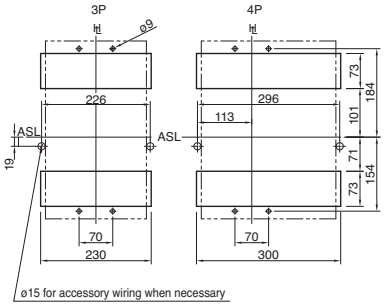

Note: Studs are factory installed in horizontal direction both on the line and load sides.

Panel cutout (front view)

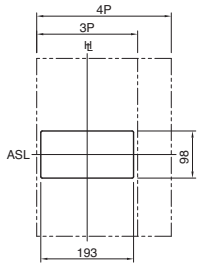

Panel cutout dimensions shown give an allowance of 1.5mm around the handle escutcheon.

Front connected with Motor Operator

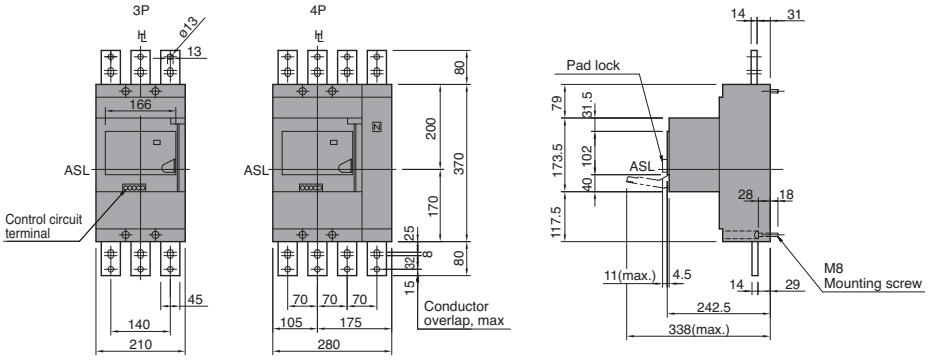

Drilling plan (front view)

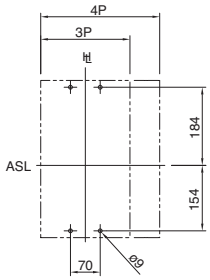

Rear connected with Motor Operator

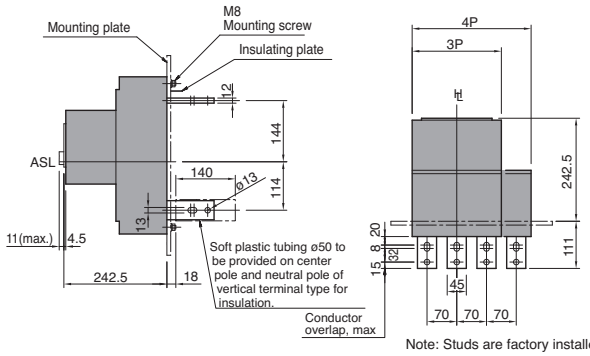

Drilling plan (front view)

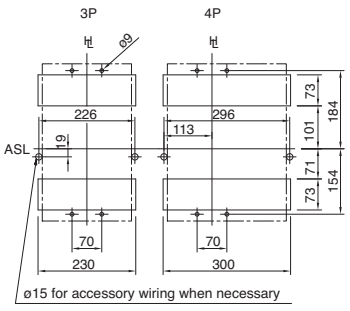

Note: Studs are factory installed in horizontal direction both on the line and load sides.

Panel cutout (front view)

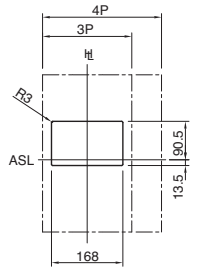

Panel cutout dimensions shown give an allowance of 1.0mm around motor operator.

TEMBREAK 2 MOULDED CASE CIRCUIT BREAKERS & SWITCH DISCONNECTORS

S1250-SE, S1250-NE, S1250-GE, S1250-NN. Plug-in Versions

ASL: Arrangement Standard Line ℄: Handle Frame Centre Line

Plug-in

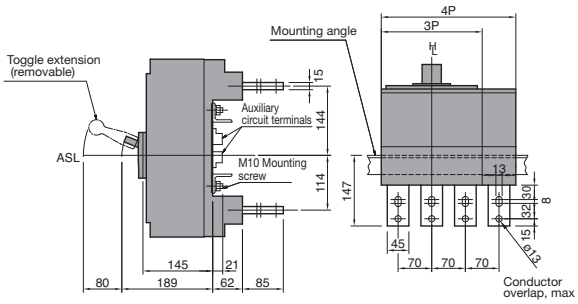

Mounting base (rear view)

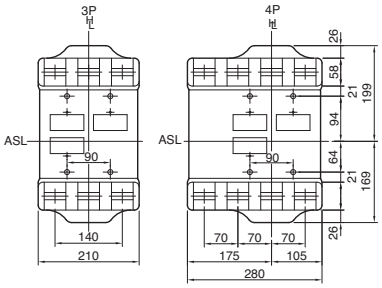

Drilling plan (front view)

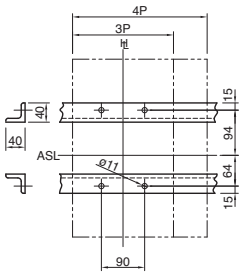

Plug-in with Motor Operator

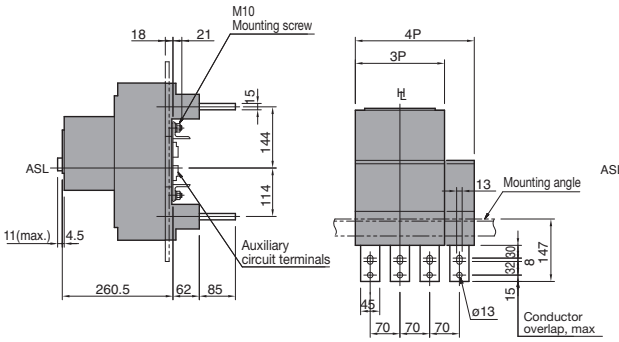

Mounting base (rear view)

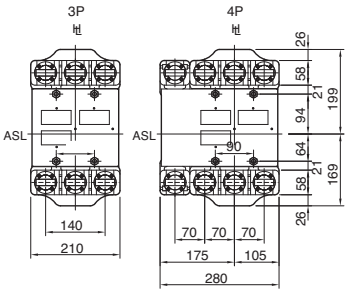

Drilling plan (front view)

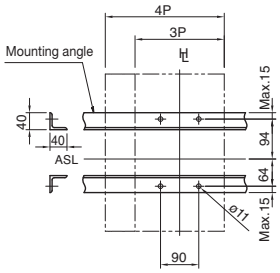

Panel cutout (front view)

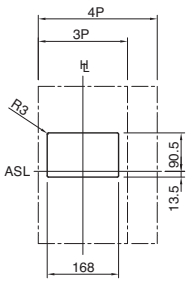

Panel cutout dimensions shown give an allowance of 1.0mm around motor operator.

SECTION 6

DIMENSIONS

TEMBREAK 2 MOULDED CASE CIRCUIT BREAKERS & SWITCH DISCONNECTORS

S1600-SE, S1600-NE, S1600-NN

ASL: Arrangement Standard Line ℄: Handle Frame Centre Line

Front connected

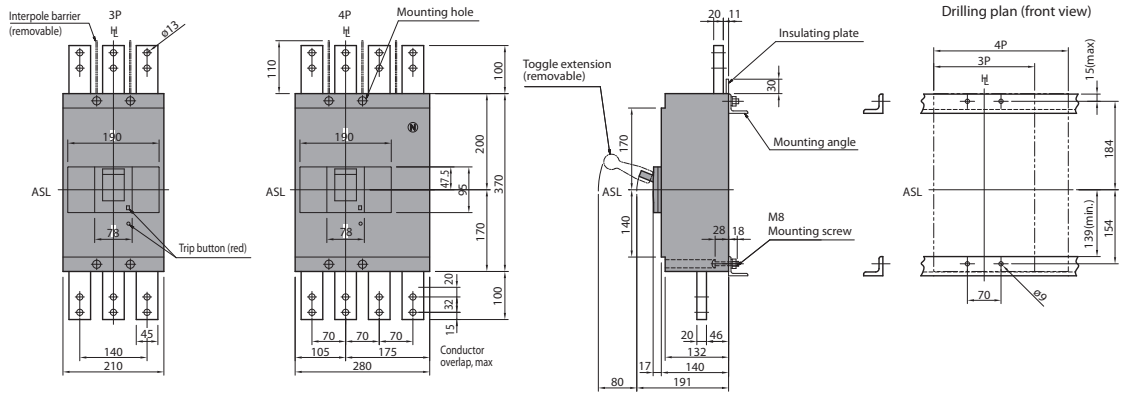

Rear connected

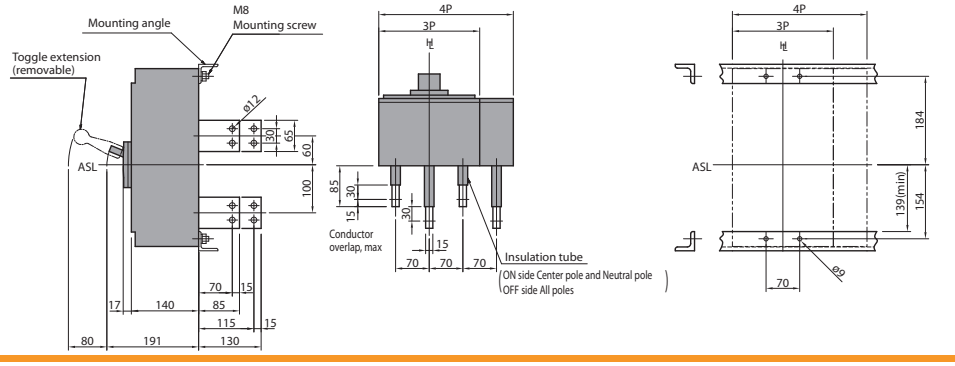

Panel cutout (front view)

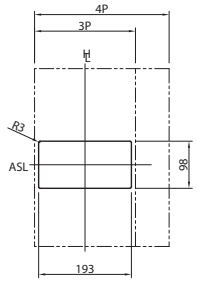

Panel cutout dimensions shown give an allowance of 1.5mm around the handle escutcheon.

Front connected with Motor Operator

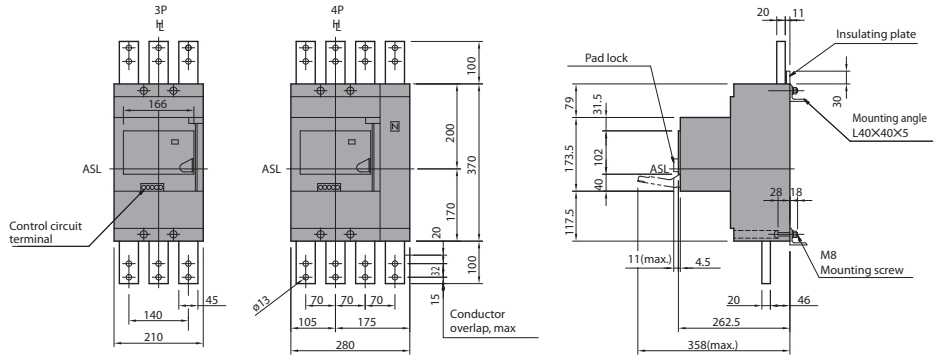

Rear connected with Motor Operator

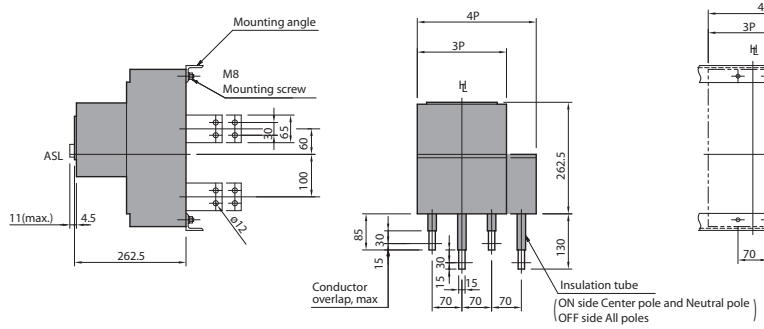

Panel cutout (front view)

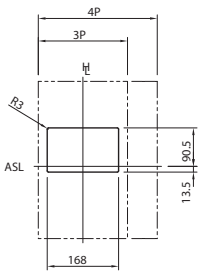

Panel cutout dimensions shown give an allowance of 1.0mm around motor operator.

TEMBREAK 2 CIRCUIT BREAKERS WITH ICU = 70KA AT 690V AC

L125-PJ

ASL: Arrangement Standard Line ℄: Handle Frame Centre Line

Front connected

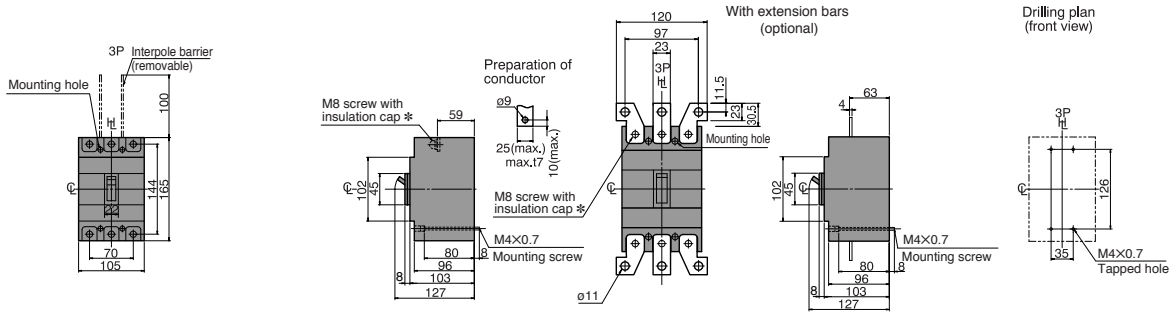

✻ Be sure to install the insulation caps (supplied as standard).

Rear connected

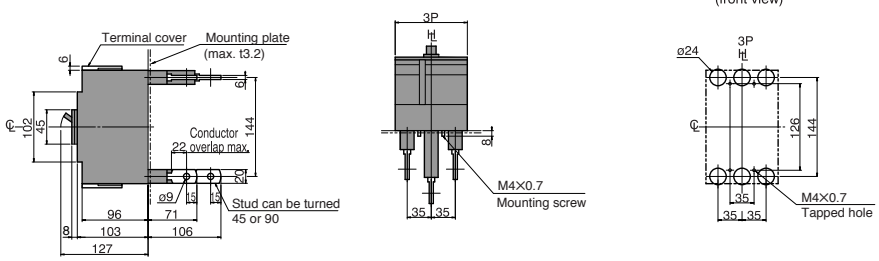

Panel cutout (front view)

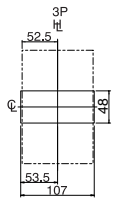

Panel cutout dimensions shown give an allowance of 1.0mm or more around the handle escutcheon.

Front connected with Motor Operator

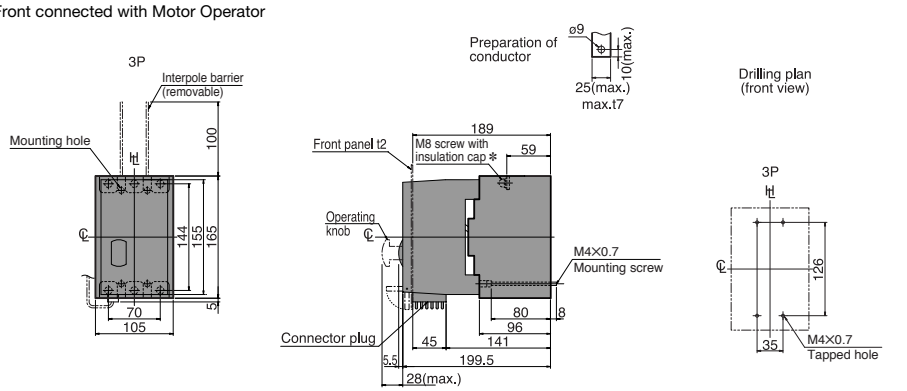

Panel hinge position (hatching area) bottom view

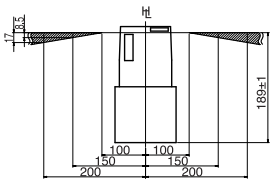

Rear connected with Motor Operator

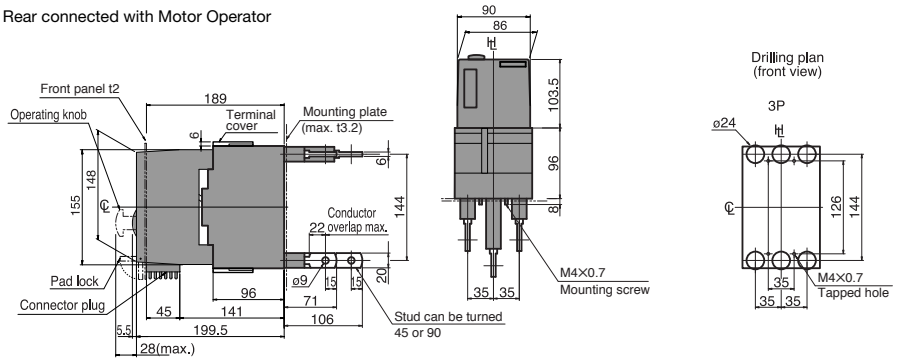

Panel cutout (front view)

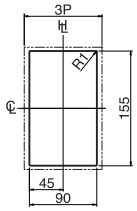

Panel cutout dimensions shown give an allowance of 1.5mm around the handle escutcheon.

SECTION 6

DIMENSIONS

TEMBREAK 2 CIRCUIT BREAKERS WITH ICU = 70KA AT 690V AC

L125-PJ. Plug in Versions

ASL: Arrangement Standard Line ℄: Handle Frame Centre Line

Outline Dimensions

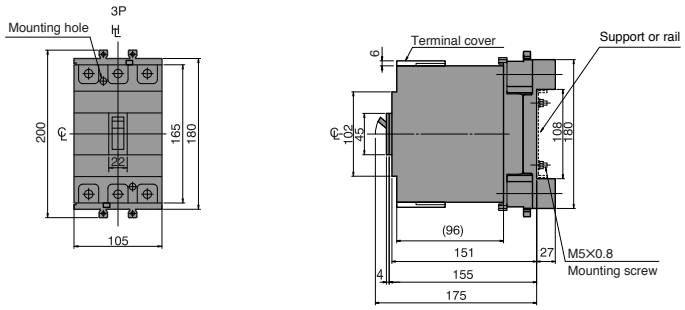

Termination of Busbar

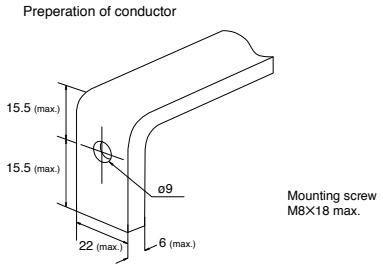

Mounting on a support or rails (shown with optional connection bars oriented for rear access)

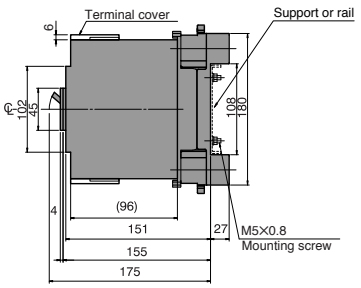

(rear view)

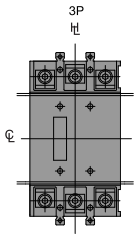

Drilling plan(front view)

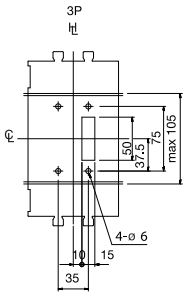

Detail of connecting part

Oriented for rear access

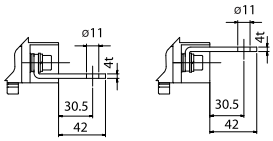

Terminal bars should be connected alternately on adjacent poles.

Mounting through the backplate (shown with optional connection bars oriented for rear access)

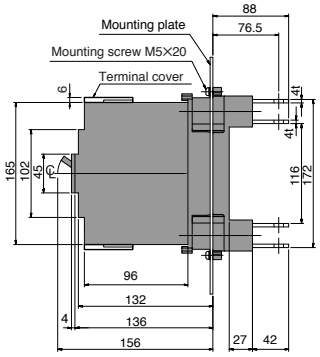

(rear view)

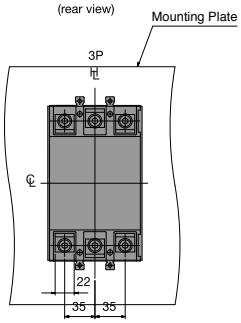

Drilling plan(front view)

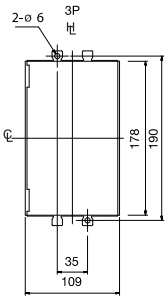

Detail of connecting part

Oriented for rear access

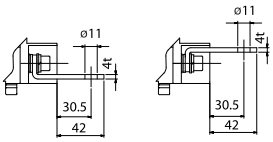

Terminal bars should be connected alternately on adjacent poles.

Mounting on the backplate (optional connection bars must be oriented for front access)

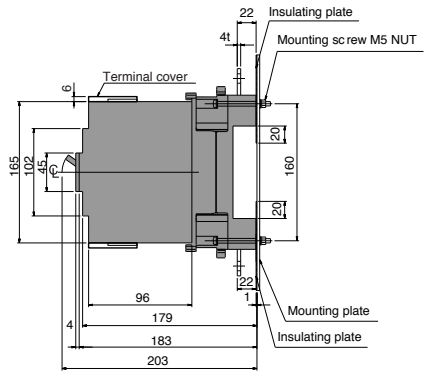

(rear view)

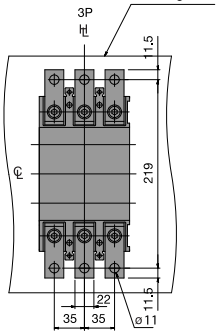

Drilling plan(front view)

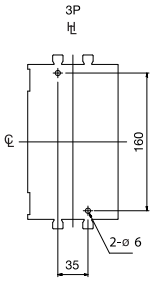

Detail of connecting part

Oriented for front access

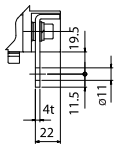

TEMBREAK 2 CIRCUIT BREAKERS WITH ICU = 70KA AT 690V AC

L400-PE

ASL: Arrangement Standard Line ℄: Handle Frame Centre Line

Rear connected

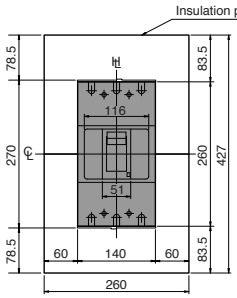

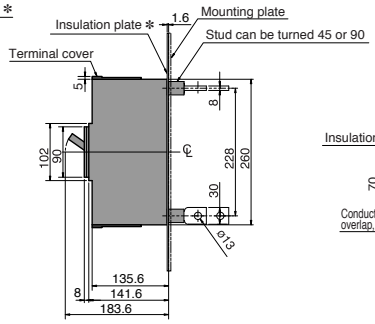

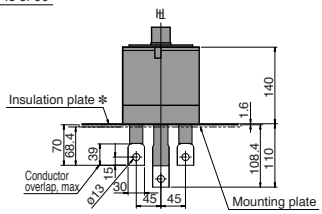

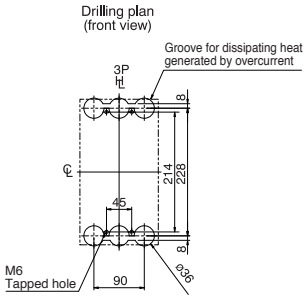

✻ Be sure to install the insulation plates (supplied as standard).
Note: Studs are factory installed in horizontal direction both on the line and load sides.

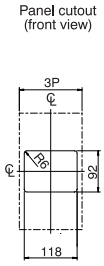

Panel cutout dimensions shown give an allowance of 1.0mm around the handle escutcheon.

Rear connected with Motor Operator

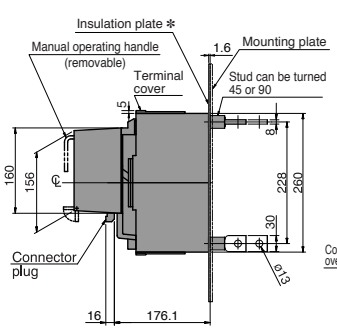

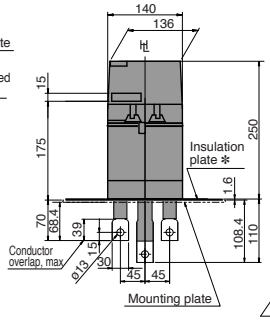

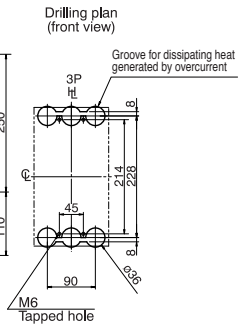

✻ Be sure to install the insulation plates (supplied as standard).
Note: Studs are factory installed in horizontal direction both on the line and load sides.

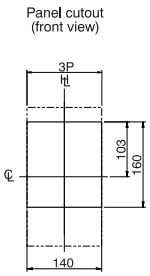

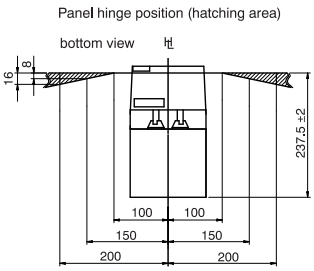

Panel cutout dimensions shown give an allowance of 1.5mm around motor operator.

DIMENSIONS

TEMBREAK 2 CIRCUIT BREAKERS WITH ICU = 70KA AT 690V AC

L400-PE. Plug in Versions

ASL: Arrangement Standard Line ⊢⊣: Handle Frame Centre Line

Outline Dimensions

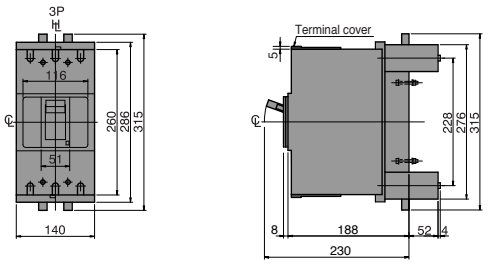

Termination of Busbar

Preperation of conductor

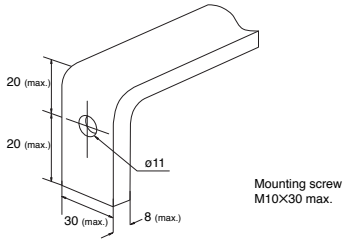

Mounting on a support or rails (shown with optional connection bars oriented for rear access)

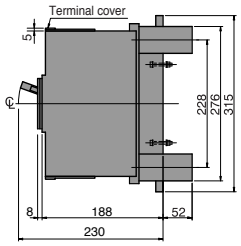

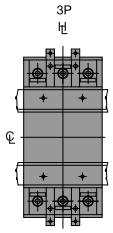

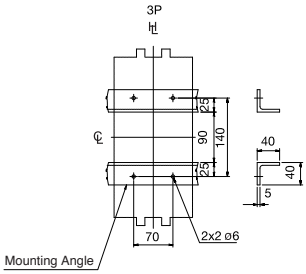

Detail of connecting part
Oriented for rear access

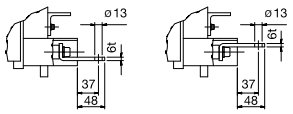

Terminal bars should be connected alternately on adjacent poles.

Mounting through the backplate (shown with optional connection bars oriented for rear access)

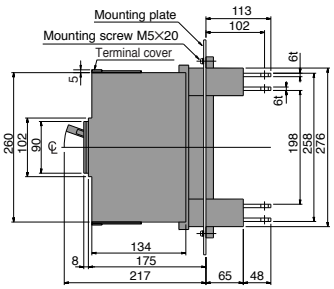

(rear view)

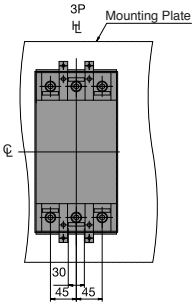

Drilling plan(front view)

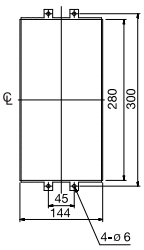

Detail of connecting part
Oriented for rear access

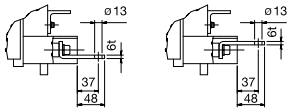

Terminal bars should be connected alternately on adjacent poles.

Mounting on the backplate (optional connection bars must be oriented for front access)

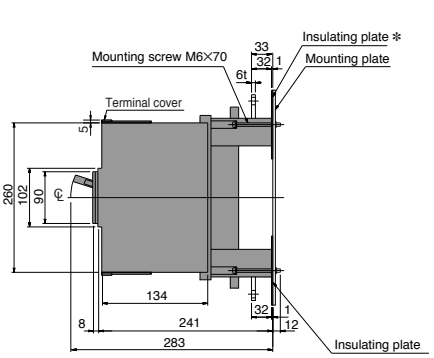

(rear view)

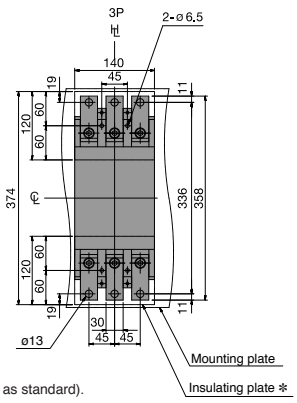

Drilling plan(front view)

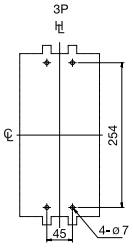

Detail of connecting part
Oriented for front access

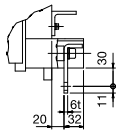

✻ Be sure to install the insulation plates (supplied as standard).

TEMBREAK 2 CIRCUIT BREAKERS WITH ICU = 70KA AT 690V AC

L800. PE

ASL: Arrangement Standard Line ℄: Handle Frame Centre Line

Rear connected

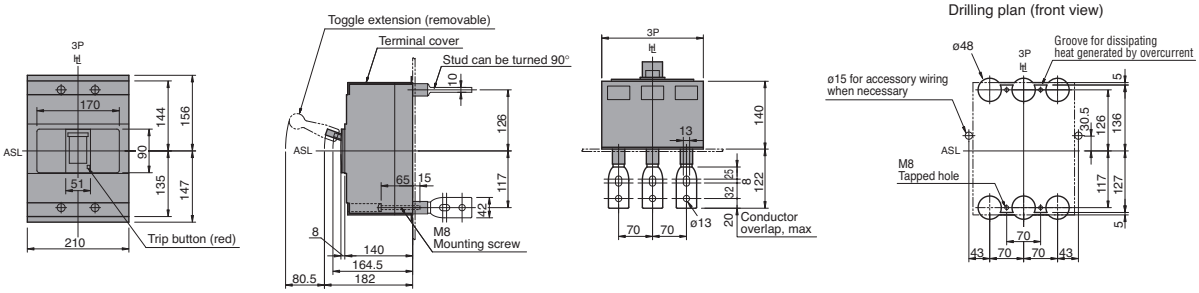

Note: Studs are factory installed in horizontal direction both on the line and load sides.

Panel cutout (front view)

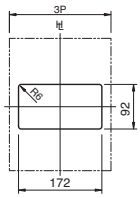

Panel cutout dimensions shown give an allowance of 1.0mm around the handle escutcheon.

Rear connected with Motor Operator

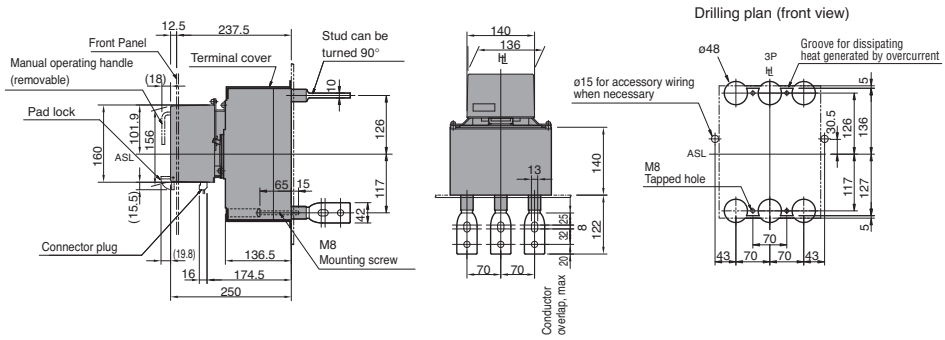

Note: Studs are factory installed in horizontal direction both on the line and load sides.

Panel cutout (front view)

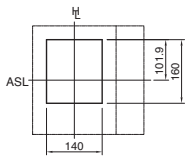

Panel cutout dimensions shown give an allowance of 1.5mm around motor operator.

Panel hinge position (hatching area) (bottom view)

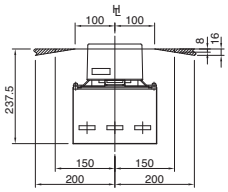

DIMENSIONS

TEMBREAK 2 CIRCUIT BREAKERS WITH ICU = 70KA AT 690V AC

L800-PE. Plug-in Versions

ASL: Arrangement Standard Line ℄: Handle Frame Centre Line

Outline Dimensions

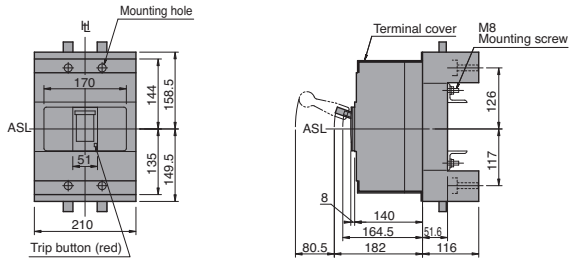

Termination of Busbar

Preperation of conductor

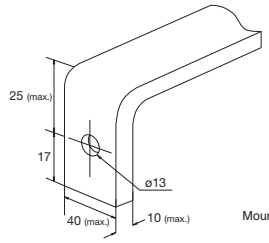

Mounting screw M12×25 max. Hex. sec. head bolt.

Mounting on the angle support

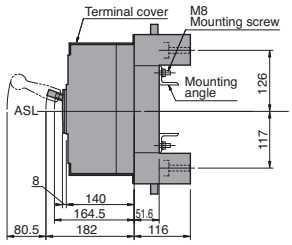

Mounting base (rear view)

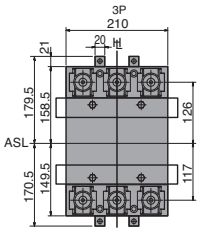

Drilling plan (front view)

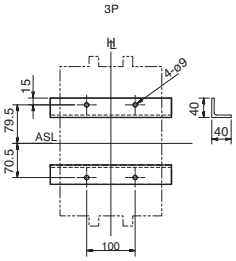

Detail of connecting part
Oriented for rear access

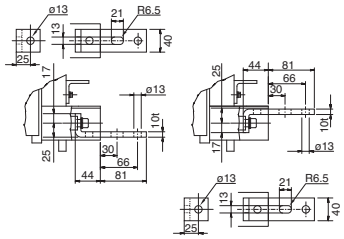

Terminal bars should be connected alternately on adjacent poles.

Mounting through the backplate (shown with optional connection bars oriented for rear access)

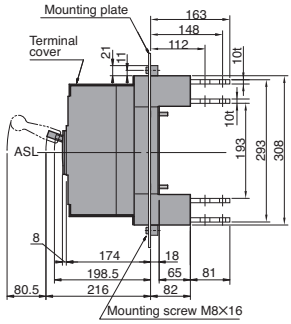

(rear view)

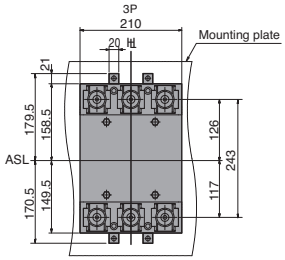

Drilling plan (front view)

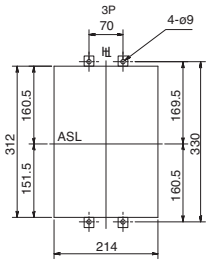

Detail of connecting part
Oriented for rear access

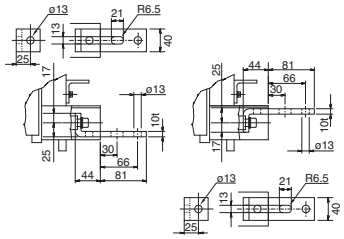

Terminal bars should be connected alternately on adjacent poles.

Mounting on the backplate (optional connection bars must be oriented for front access)

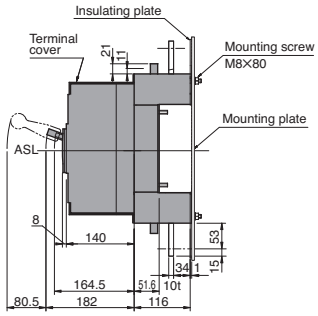

(rear view)

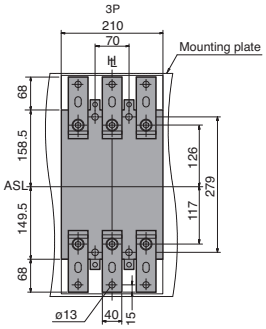

Drilling plan (front view)

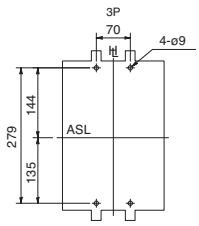

Detail of connecting part
Oriented for front access

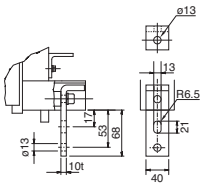

TEMBREAK 2 MOULDED CASE CIRCUIT BREAKERS FOR 1000V AC

VS125-NJ

ASL: Arrangement Standard Line ℄: Handle Frame Centre Line

Front connected with terminal bars optional

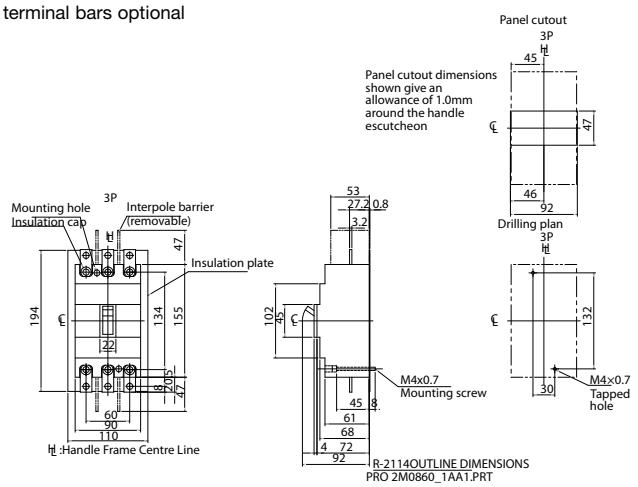

Rear connected

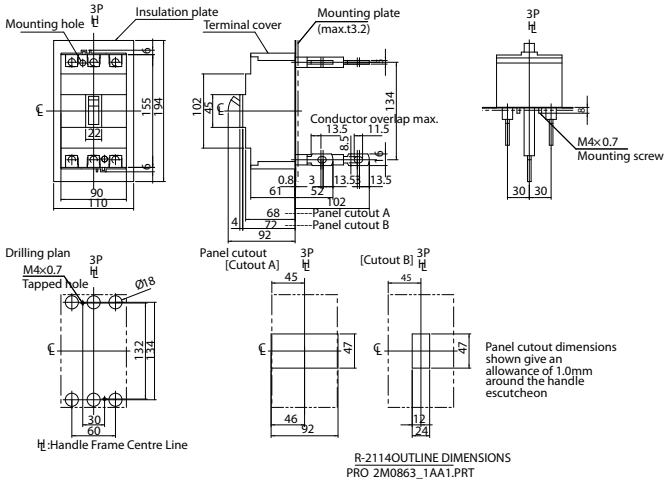

Plug in (PMB)

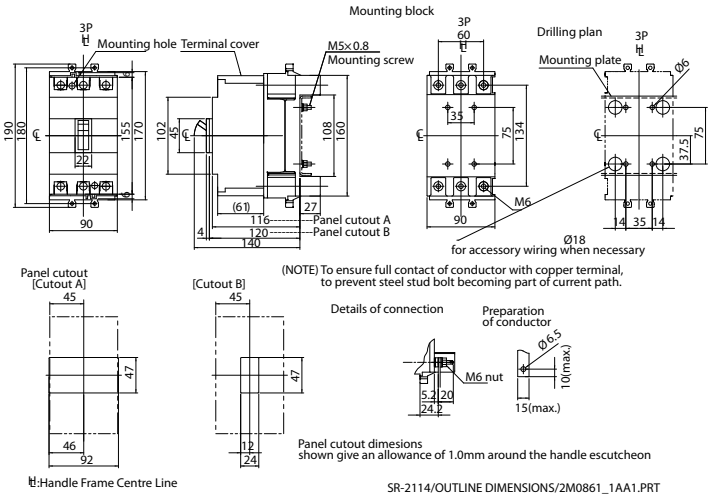

SECTION 6

DIMENSIONS

TEMBREAK 2 MOULDED CASE CIRCUIT BREAKERS FOR 1000V AC

VS250-NJ

ASL: Arrangement Standard Line ⊬: Handle Frame Centre Line

Front connected with terminal bars

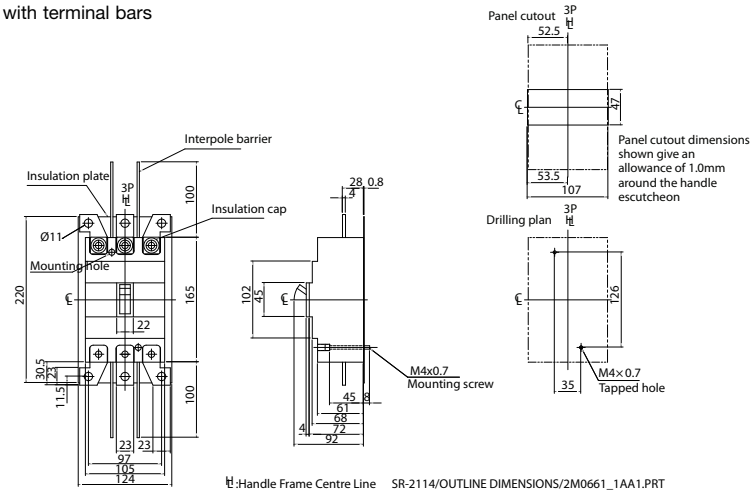

Rear connected

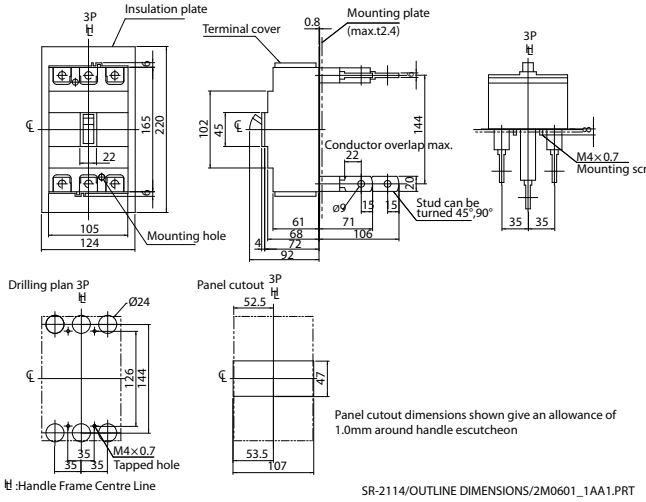

Plug in (PMB)

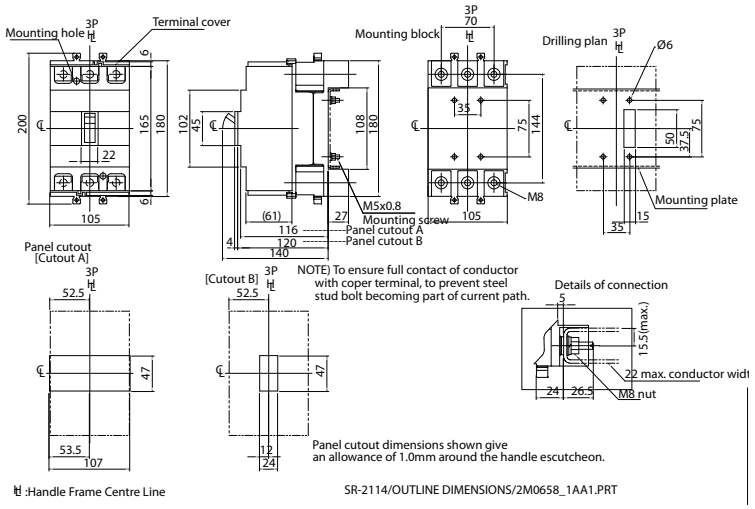

TEMBREAK 2 LITE MOULDED CASE CIRCUIT BREAKERS & SWITCH DISCONNECTORS

E160-SF (1P)

ASL: Arrangement Standard Line ℍ: Handle Frame Centre Line ℄: Handle Centre Line

Front connected

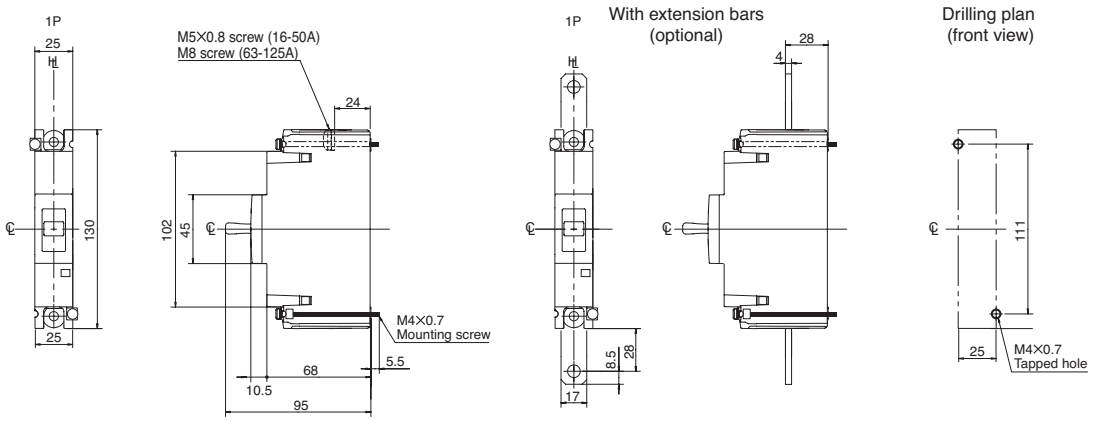

DIMENSIONS

TEMBREAK 2 LITE MOULDED CASE CIRCUIT BREAKERS & SWITCH DISCONNECTORS

E160-SF, S160-SCF, S160-SF

ASL: Arrangement Standard Line ⊬: Handle Frame Centre Line ℄: Handle Centre Line

Front connected

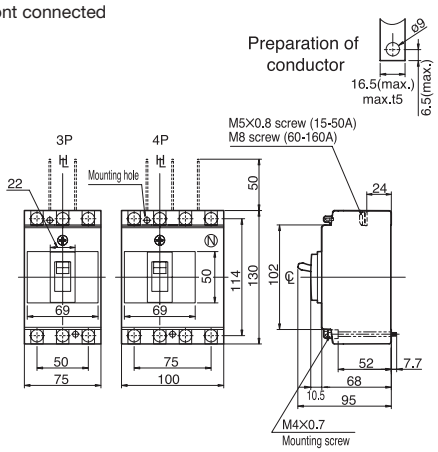

With extension bars (optional)

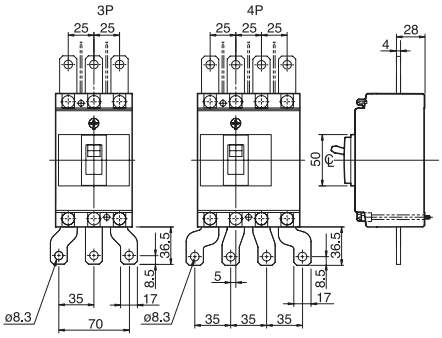

Drilling plan (front view)

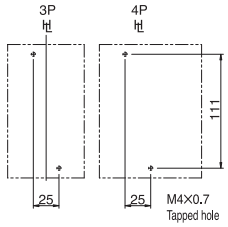

Note: For the extension bars, Straight bars or Spread bars can be supplied.
2 poles is straight bars only.

Rear connected

Detail of connecting part

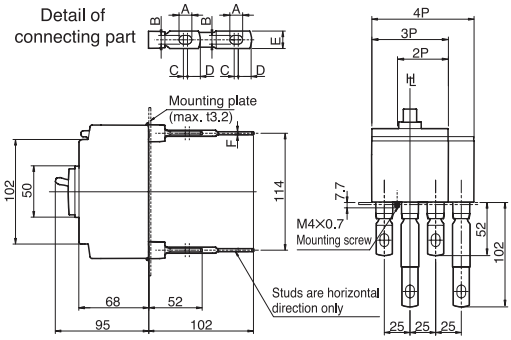

Rated current (A)	A	B	C	D	E	F
16-50	10.5	6.5	4	13	16	4
63-160	12.5	8.5	4	13	16	5

Drilling plan (front view)

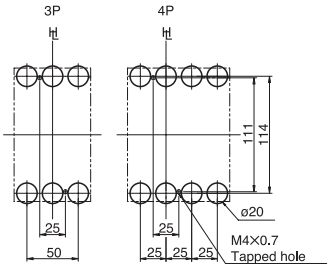

Panel cutout (front view)

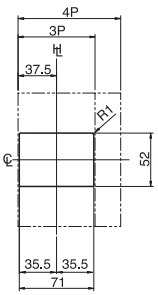

Panel cutout dimensions shown give an allowance of 1.0mm around the handle escutcheon.

TEMBREAK 2 LITE MOULDED CASE CIRCUIT BREAKERS & SWITCH DISCONNECTORS

E250-SCF, E250-SF, SF250-SF

ASL: Arrangement Standard Line ℍ: Handle Frame Centre Line ℄: Handle Centre Line

Front connected

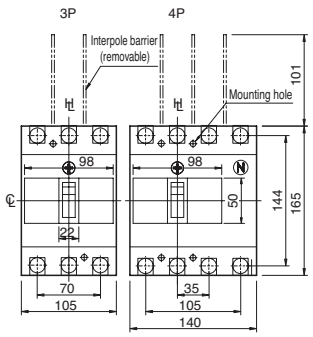

Preparation of conductor

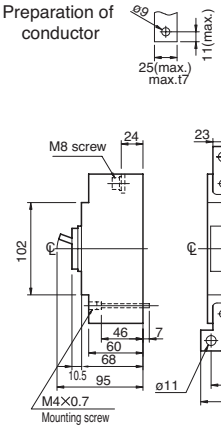

With extension bars (optional)

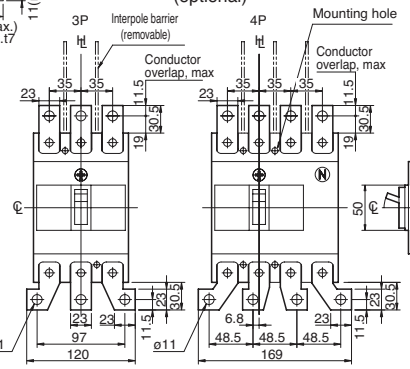

Drilling plan (front view)

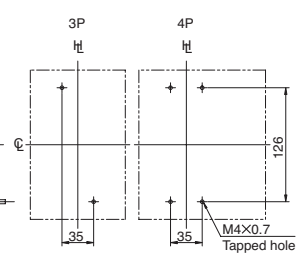

Note: For the extension bars, Straight bars or Spread bars can be supplied.

Rear connected

Detail of connecting part

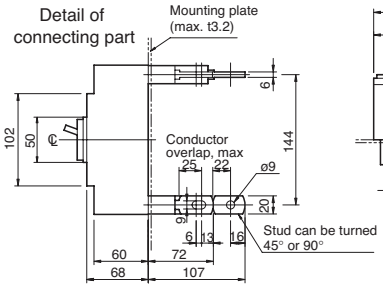

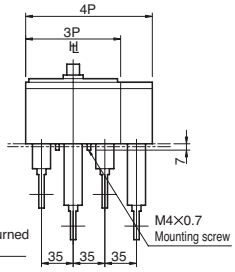

Drilling plan (front view)

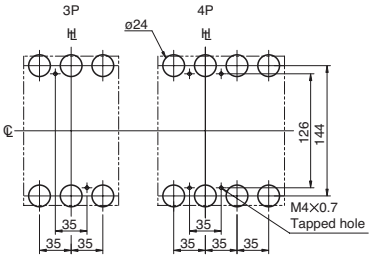

Panel cutout (front view)

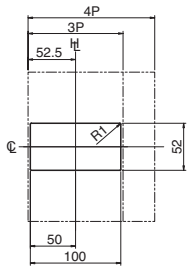

Panel cutout dimensions shown give an allowance of 1.0mm around the handle escutcheon.

DIMENSIONS

TEMBREAK 2 LITE MOULDED CASE CIRCUIT BREAKERS & SWITCH DISCONNECTORS

E160-SJ, S160-SCJ, S160-SJ, S160-SN

ASL: Arrangement Standard Line ⊢⊣: Handle Frame Centre Line ℄: Handle Centre Line

Front connected

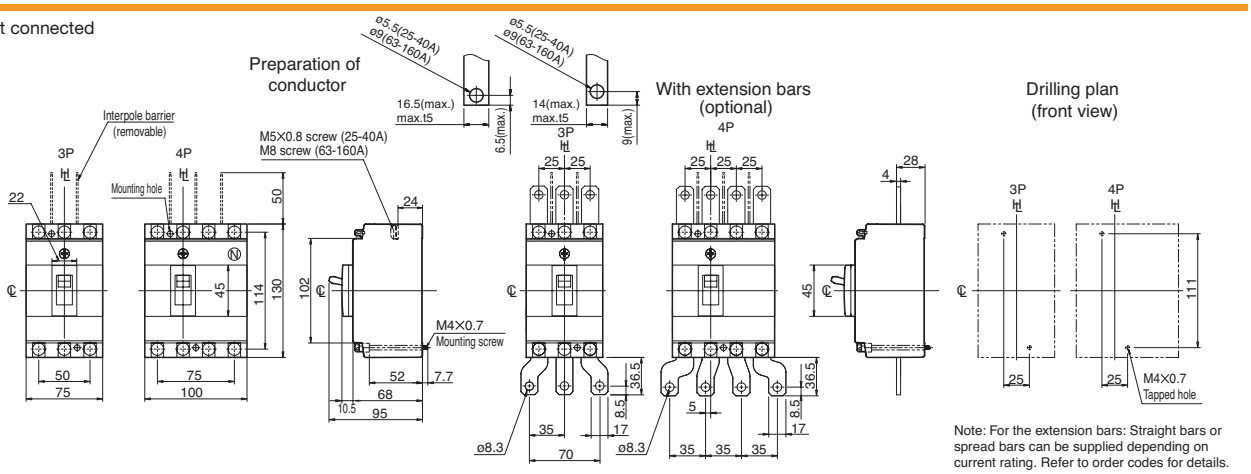

Note: For the extension bars: Straight bars or spread bars can be supplied depending on current rating. Refer to order codes for details.

Rear connected

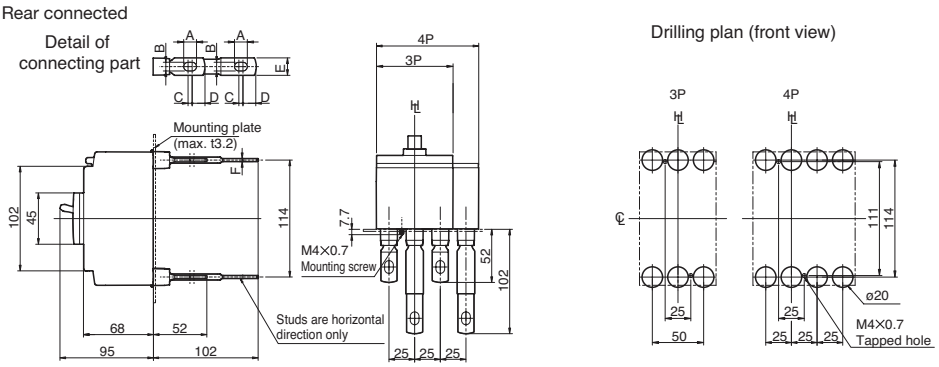

Rated current (A)	A	B	C	D	E	F
16-50	10.5	6.5	4	13	16	4
63-160	12.5	8.5	4	13	16	5

Panel cutout (front view)

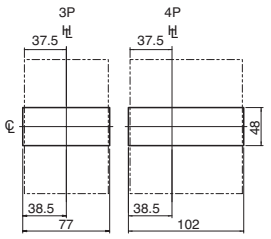

Panel cutout dimensions shown give an allowance of 1.0mm or more around the handle escutcheon.

TEMBREAK 2 LITE MOULDED CASE CIRCUIT BREAKERS & SWITCH DISCONNECTORS

E250-SCJ, E250-SJ, S250-SJ, S250-SN

ASL: Arrangement Standard Line ℄: Handle Frame Centre Line

Front connected

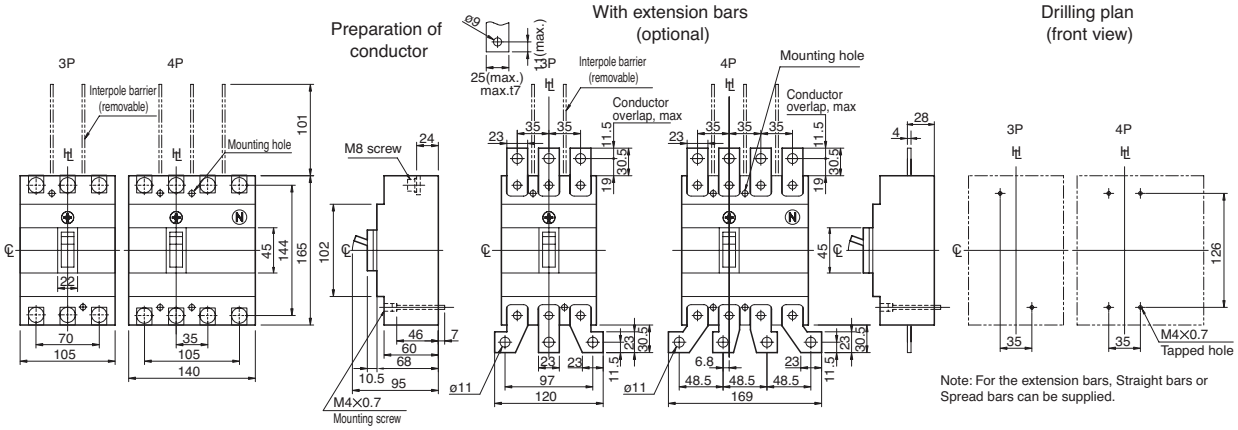

Rear connected

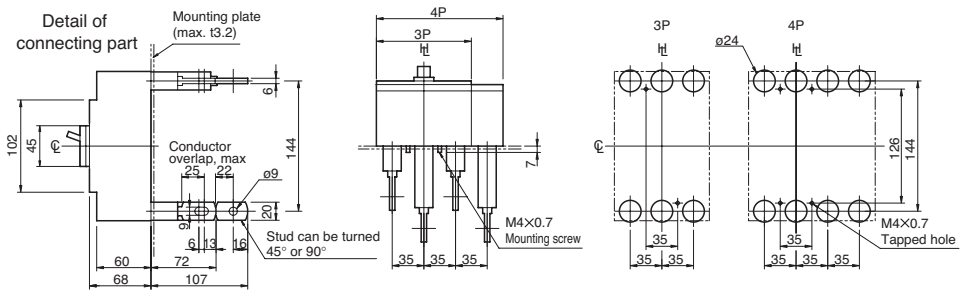

Panel cutout (front view)

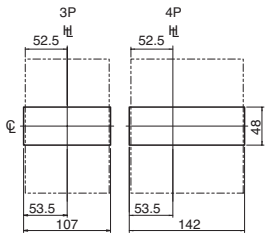

Panel cutout dimensions shown give an allowance of 1.0mm around the handle escutcheon.

SECTION 6

DIMENSIONS

TEMBREAK 2 MOULDED CASE CIRCUIT BREAKERS WITH INTEGRAL RESIDUAL CURRENT PROTECTION (CBR)

ZE125-NJ, ZS125-NJ, ZS125-GJ

ASL: Arrangement Standard Line ⊢⊣: Handle Frame Centre Line

Front connected

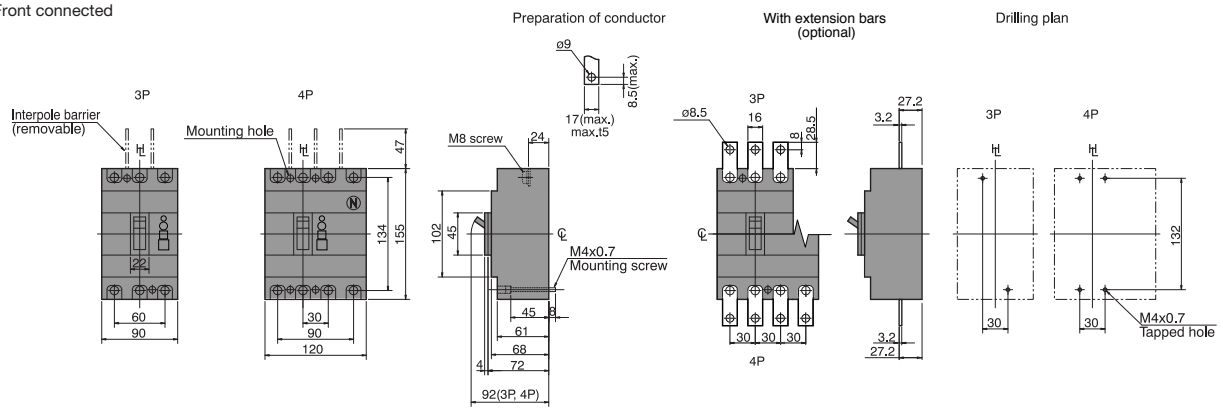

Rear connected

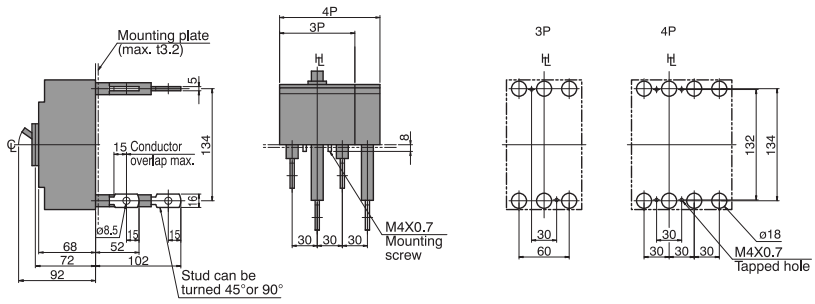

Panel cutout (Front view)

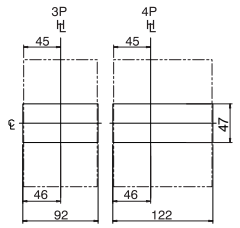

Panel cutout dimensions shown give an allowance of 1.0mm or more around the handle escutcheon.

TEMBREAK 2 MOULDED CASE CIRCUIT BREAKERS WITH INTEGRAL RESIDUAL CURRENT PROTECTION (CBR)

ZE250-NJ, ZS250-NJ, ZS250-GJ

ASL: Arrangement Standard Line ℄: Handle Frame Centre Line

Front connected

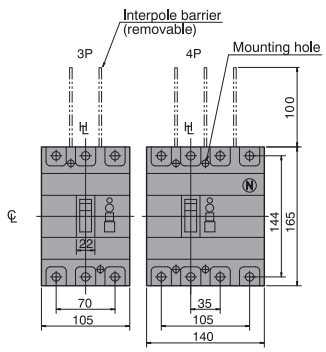

Preparation of conductor

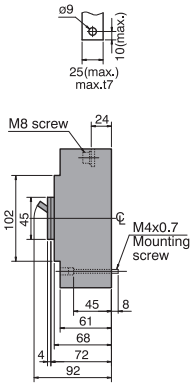

With extension bars
(optional)

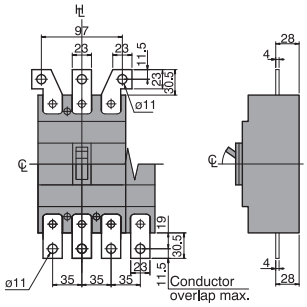

Drilling plan

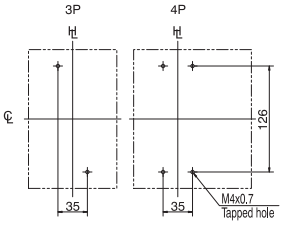

Rear connected

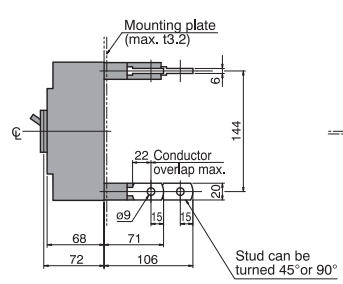

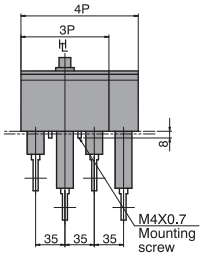

Drilling plan

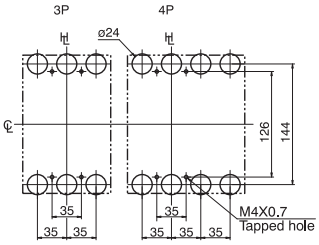

Panel cutout
(Front view)

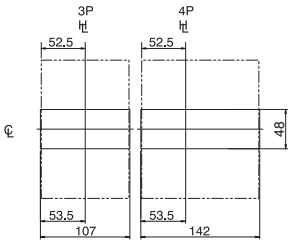

Panel cutout dimensions shown give an allowance of 1.0mm or more around the handle escutcheon.

Front connected with Motor Operator

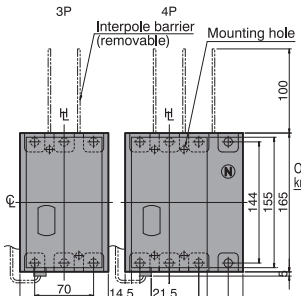

Preparation of
conductor

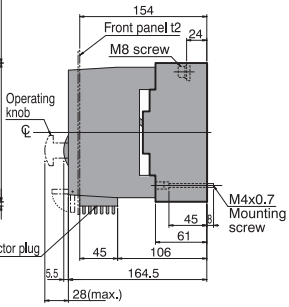

Drilling plan

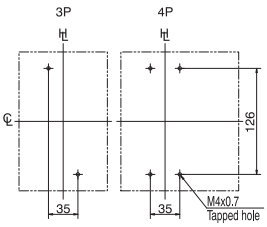

Panel hinge position (hatching area)
bottom view

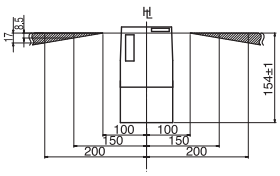

Rear connected with Motor Operator

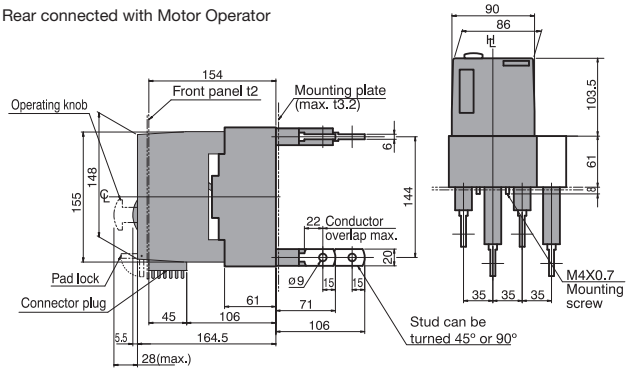

Drilling plan

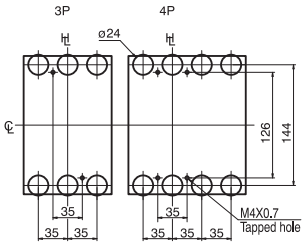

Panel cutout
(Front view)

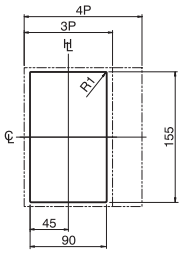

Panel cutout dimensions shown give an allowance of 1.5mm around the handle escutcheon.

DIMENSIONS

MOULDED CASE CIRCUIT BREAKERS & SWITCH DISCONNECTORS FOR USE ABOVE 250V DC

S160-SD, S160-GD, S160-SDN Outline Dimensions

ASL: Arrangement Standard Line ⊬: Handle Frame Centre Line

Front connected

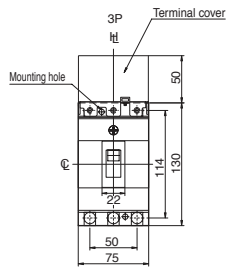

Preparation of conductor

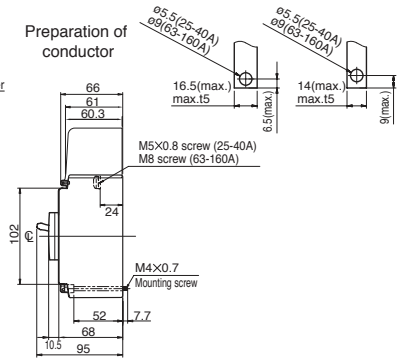

With extension bars ✻ (optional)

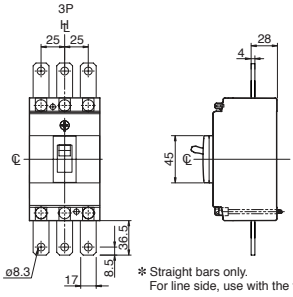

Drilling plan (front view)

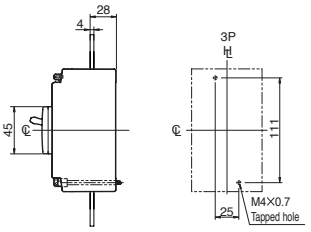

✻ Straight bars only.
For line side, use with the terminal cover.

Rear connected

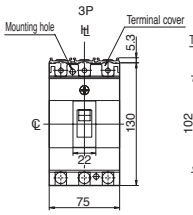

Detail of connecting part

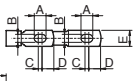

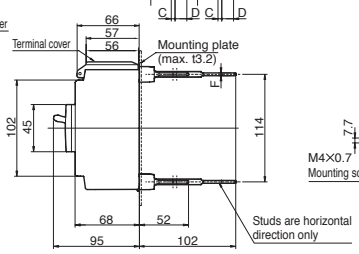

Rated current (A)	A	B	C	D	E	F
25-40	10.5	6.5	4	13	16	4
63-160	12.5	8.5	4	13	16	5

Drilling plan (front view)

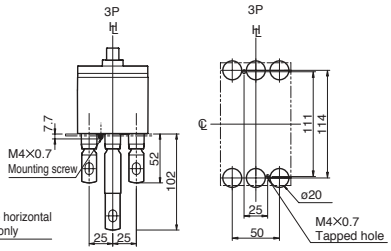

Panel cutout (front view)

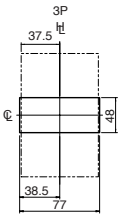

Panel cutout dimensions shown give an allowance of 1.0mm or more around the handle escutcheon.

S250-SD, S250-GD, S250-SDN Outline Dimensions

Front connected

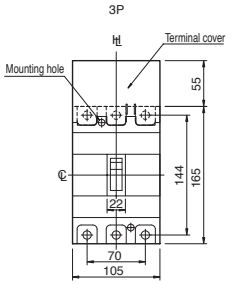

Preparation of conductor

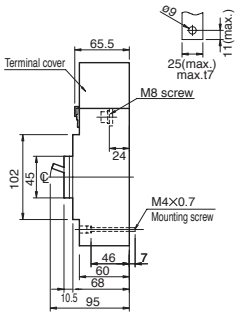

With extension bars ✻ (optional)

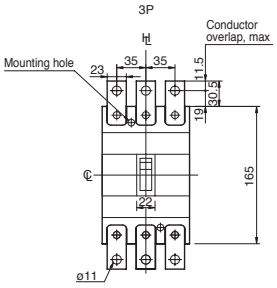

✻ Straight bars only.
For line side, use with the terminal cover.

Drilling plan (front view)

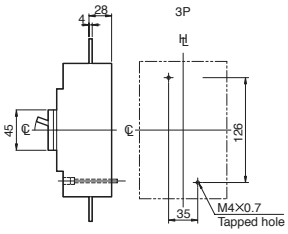

Rear connected

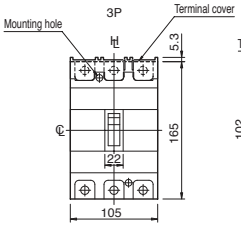

Detail of connecting part

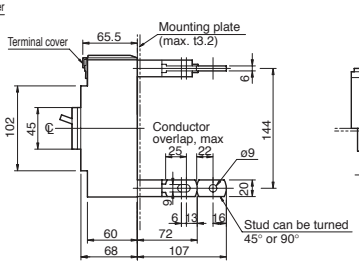

Drilling plan (front view)

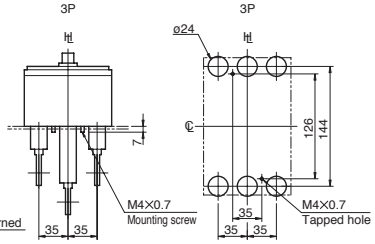

Panel cutout (front view)

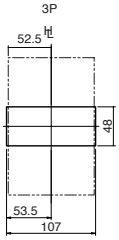

Panel cutout dimensions shown give an allowance of 1.0mm around the handle escutcheon.

MOULDED CASE CIRCUIT BREAKER & SWITCH DISCONNECTORS FOR USE ABOVE 250V DC

PVS400-NDL, PVS400-NDH, PVS400-NNL, PVS400-NNH Outline Dimensions

ASL: Arrangement Standard Line ℄: Handle Frame Centre Line

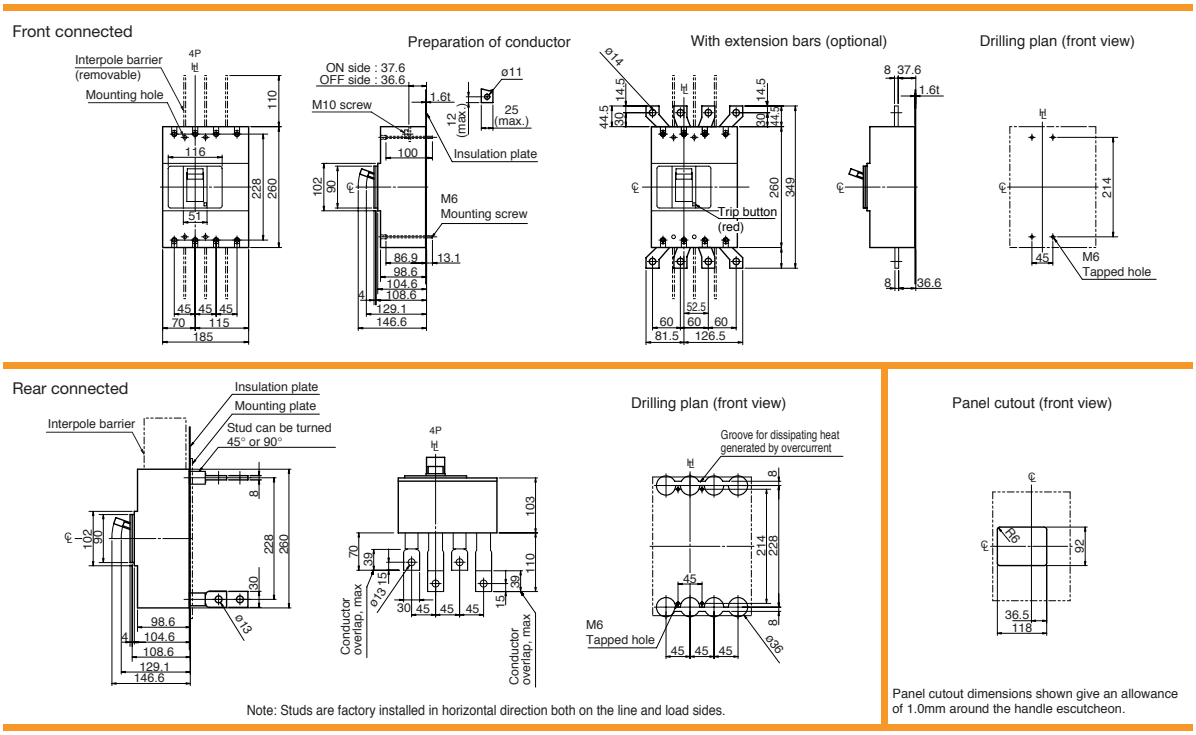

Note: Studs are factory installed in horizontal direction both on the line and load sides.

Panel cutout dimensions shown give an allowance of 1.0mm around the handle escutcheon.

SECTION 6

DIMENSIONS

MOULDED CASE CIRCUIT BREAKER & SWITCH DISCONNECTORS FOR USE ABOVE 250V DC

S400-ND Outline Dimensions

ASL: Arrangement Standard Line ℄: Handle Frame Centre Line

Front connected

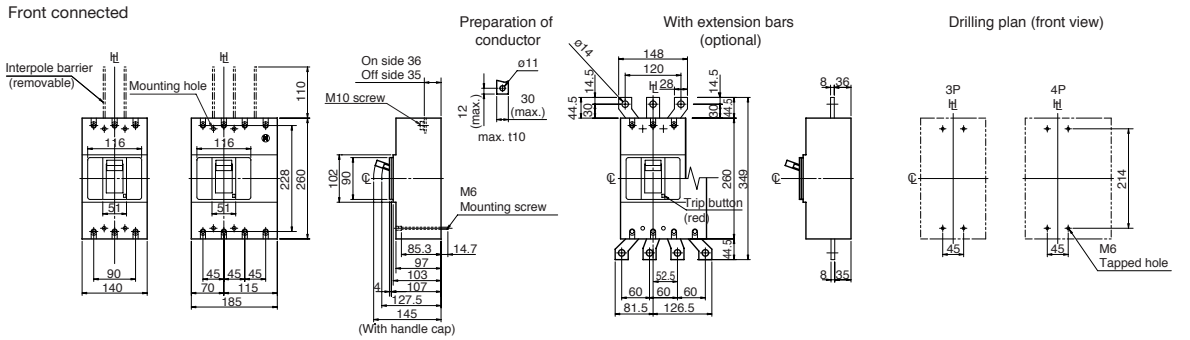

Rear connected

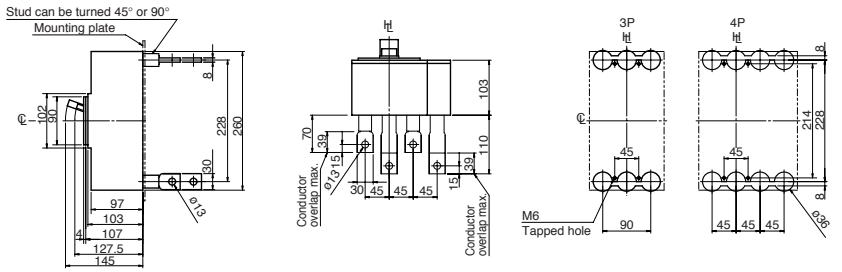

Note: Studs are factory installed in horizontal direction both on the line and load sides.

Panel cutout (front view)

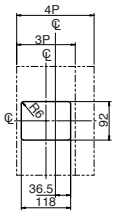

Panel cutout dimensions shown give an allowance of 1.0mm around the handle escutcheon.

S800-ND Outline Dimensions

Front connected

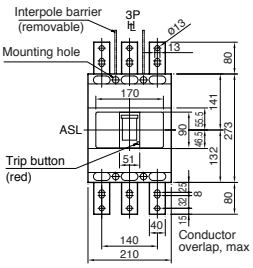

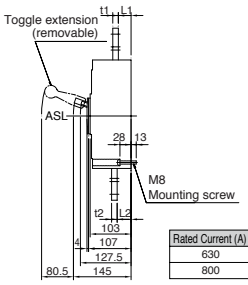

Rated Current (A)	L1	L2	t1	t2
630	32	34	8	8
800	32	35	10	10

Drilling plan (front view)

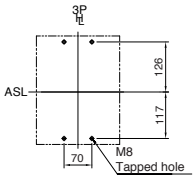

Rear connected

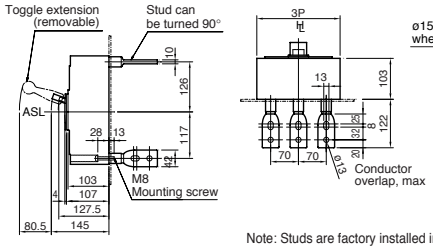

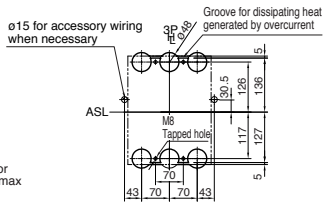

Note: Studs are factory installed in horizontal direction both on the line and load sides.

Drilling plan (front view)

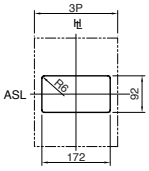

Panel cutout (front view)

Panel cutout dimensions shown give an allowance of 1.0mm around the handle escutcheon.

MOULDED CASE CIRCUIT BREAKERS & SWITCH DISCONNECTORS FOR USE ABOVE 250V DC

PVS800-NDL, PVS800-NDH, PVS800-NNL, PVS800-NNH

ASL: Arrangement Standard Line ⊢⊣: Handle Frame Centre Line ℄: Handle Centre Line

Front connected

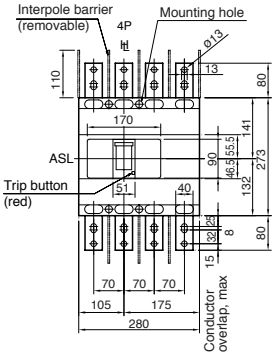

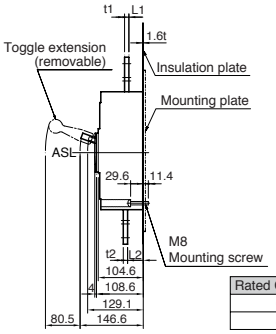

Rated Current (A)	L1	L2	t1	t2
630	33.6	35.6	8	8
800	33.6	36.6	10	10

Drilling plan (front view)

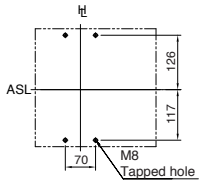

Rear connected

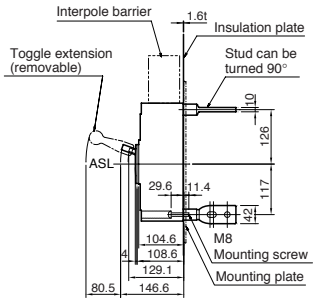

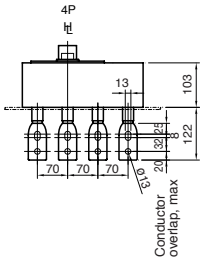

Drilling plan (front view)

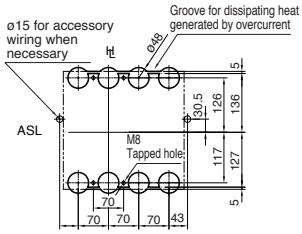

Panel cutout (front view)

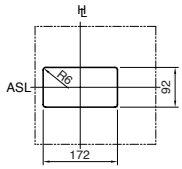

Note: Studs are factory installed in horizontal direction both on the line and load sides.

Panel cutout dimensions shown give an allowance of 1.0mm around the handle escutcheon.

DIMENSIONS

MOULDED CASE CIRCUIT BREAKERS & SWITCH DISCONNECTORS FOR USE ABOVE 250V DC

S1000-ND

ASL: Arrangement Standard Line ℍ: Handle Frame Centre Line ℄: Handle Centre Line

Front connected

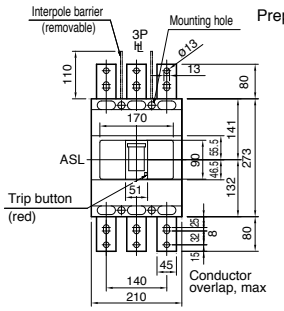

Preparation of conductor

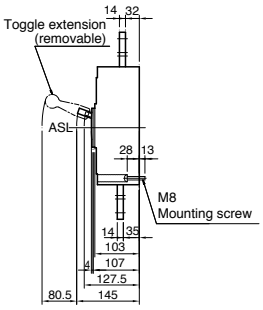

Drilling plan (front view)

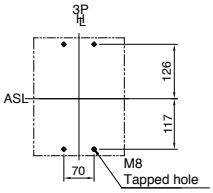

Rear connected

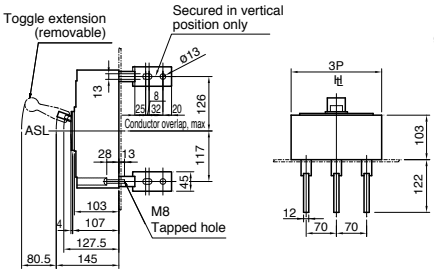

Drilling plan (front view)

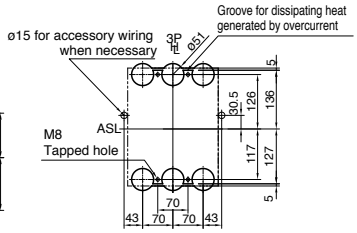

Panel cutout (front view)

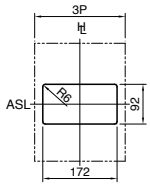

Panel cutout dimensions shown give an allowance of 1.0mm around the handle escutcheon.

Note: 2 poles breaker is same outline dimensions as 3 poles breaker.

MOULDED CASE CIRCUIT BREAKERS & SWITCH DISCONNECTORS FOR USE ABOVE 250V DC

XS1250ND

ASL: Arrangement Standard Line ℍ: Handle Frame Centre Line ℄: Handle Centre Line

Front connected

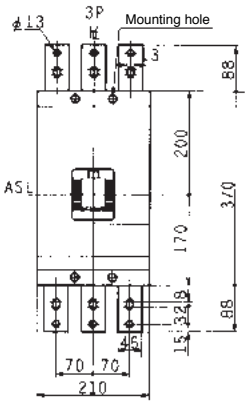

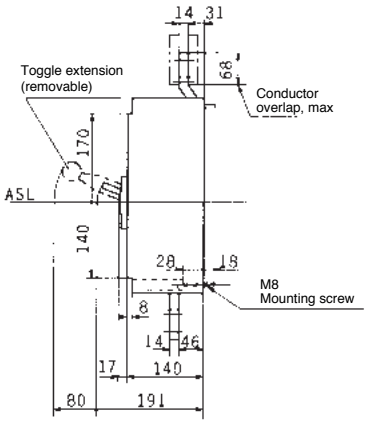

Drilling plan (front view)

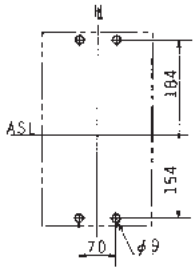

Rear connected

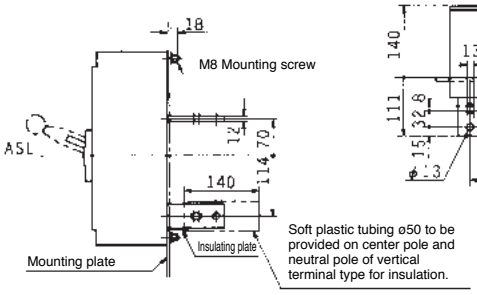

Note: Studs are factory installed in horizontal direction both on the line and load sides.
Please specify when ordering if vertical direction is reqired.

Rear-connected

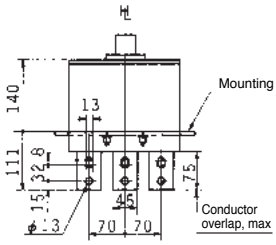

Drilling plan (front view)

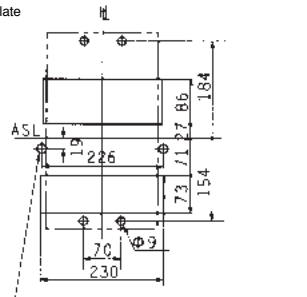

ø15 for accessory wiring when necessary

Panel cutout (front view)

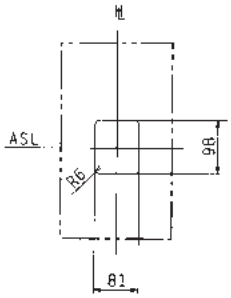

Panel cutout dimensions shown give an allowance of 1.5mm around the handle escutcheon.

Note: 2 poles breaker is same outline dimensions as 3 poles breaker.

DIMENSIONS

MOULDED CASE CIRCUIT BREAKERS & SWITCH DISCONNECTORS FOR USE ABOVE 250V DC

XS1600ND

ASL: Arrangement Standard Line ℍ: Handle Frame Centre Line ℄: Handle Centre Line

Front connected

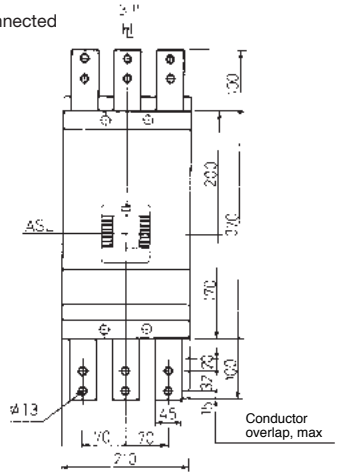

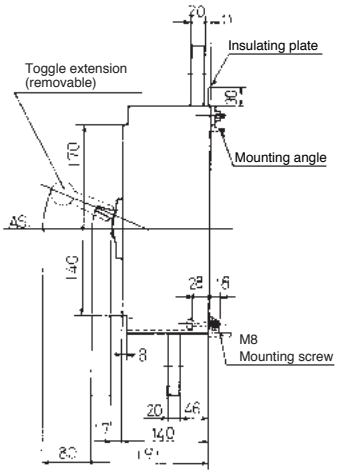

Drilling plan (front view)

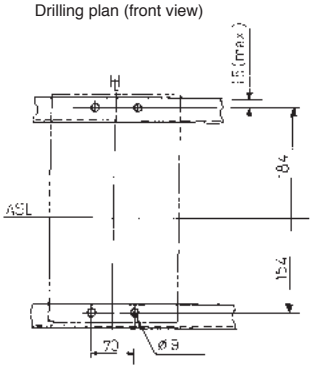

Rear connected

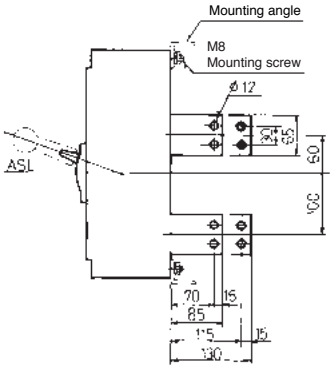

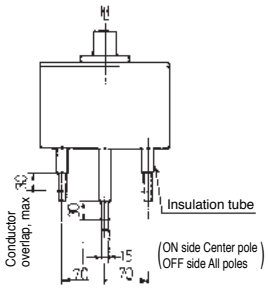

Drilling plan (front view)

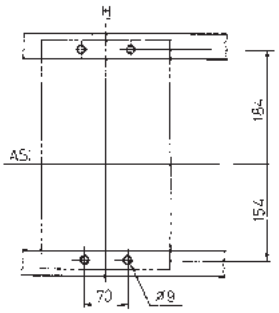

Panel cutout (front view)

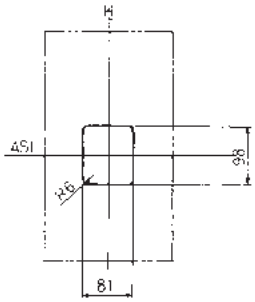

Panel cutout dimensions shown give an allowance of 1.5mm around the handle escutcheon.

MOULDED CASE CIRCUIT BREAKERS & SWITCH DISCONNECTORS FOR USE ABOVE 250V DC

XS2000ND

ASL: Arrangement Standard Line ℍ: Handle Frame Centre Line ℄: Handle Centre Line

Front connected

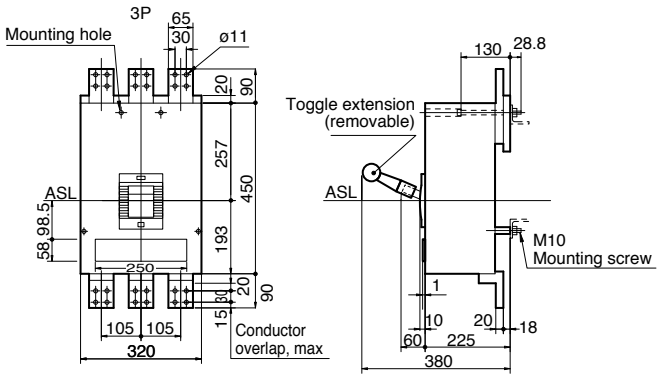

Drilling plan (front view)

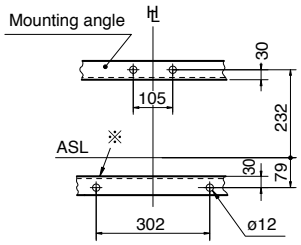

※Use non-magnetic angle (SUS 304 etc.)

Rear connected

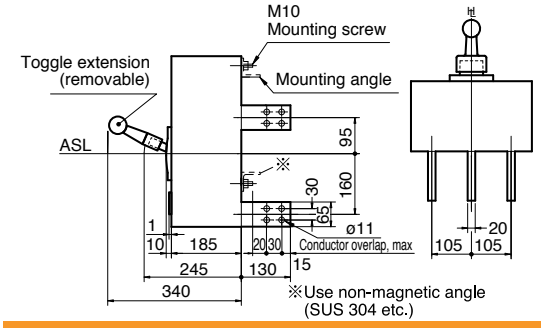

※Use non-magnetic angle (SUS 304 etc.)

Drilling plan (front view)

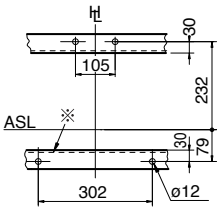

Panel cutout (front view)

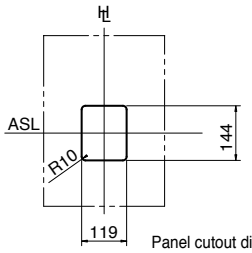

Panel cutout dimensions shown give an allowance of 2mm around the handle escutcheon.

Draw out

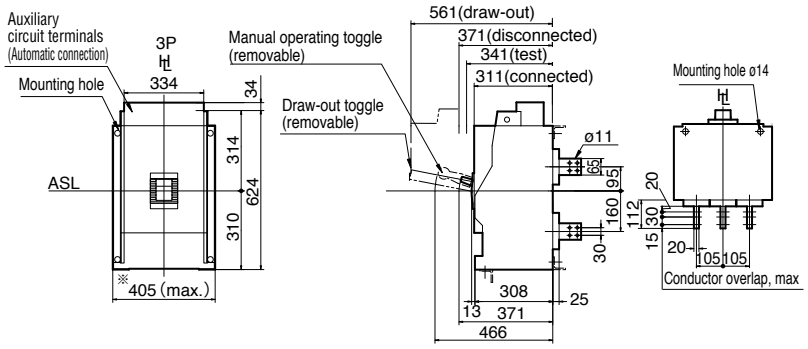

※Contact TERASAKI if manual connection is required.

Drilling plan (front view)

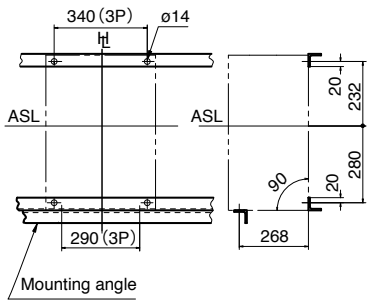

Note: 2 poles breaker is same outline dimensions as 3 poles breaker.

DIMENSIONS

MOULDED CASE CIRCUIT BREAKER & SWITCH DISCONNECTORS FOR USE ABOVE 250V DC

XS2500ND Outline Dimensions

ASL: Arrangement Standard Line ℍ: Handle Frame Centre Line ℄: Handle Centre Line

Front connected

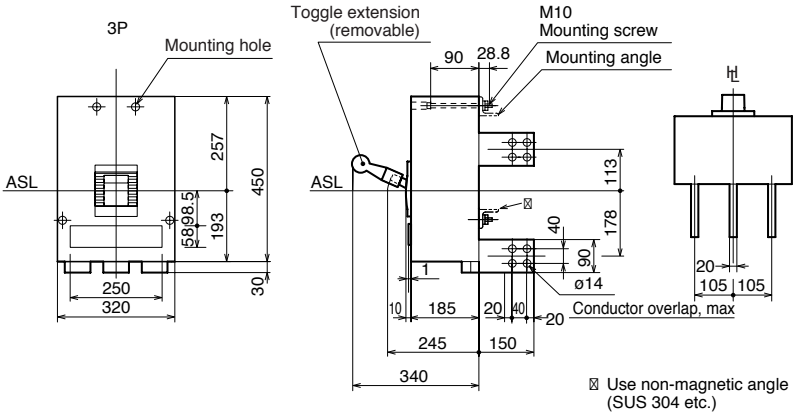

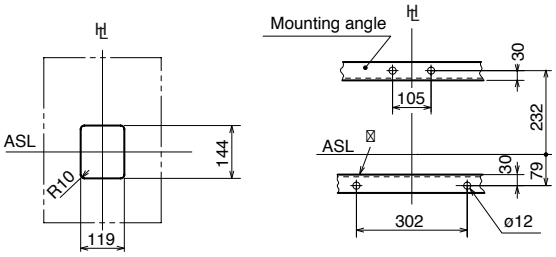

Panel cutout dimensions shown give an allowance of 2mm around the handle escutcheon.

Use non-magnetic angle (SUS 304 etc.)

Note: 2 poles breaker is same outline dimensions as 3 poles breaker.

BREAKER MOUNTED HANDLES

Tembreak 2 Lite MCCBs & Switch Disconnectors

ASL: Arrangement Standard Line ℍ: Handle Frame Centre Line ℄: Handle Centre Line

Applicable breaker types
E160-SF, S160-SCF, S160-SF E160-SJ S160-SCJ, S160-SJ, S160-SN

● Outline dimensions

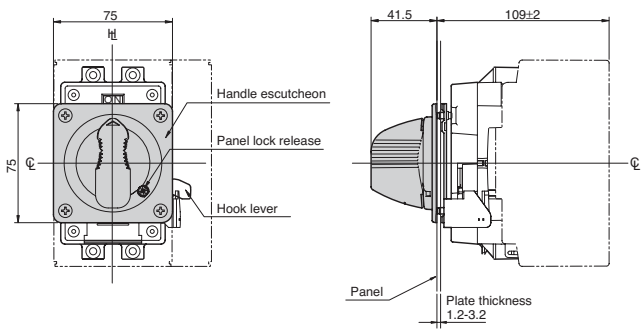

● Panel cutout dimensions

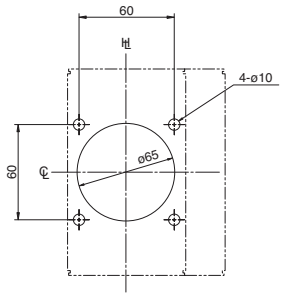

• Positions of the hinge and handle as seen from the load side of the breaker. Ensure that the hinge is positioned in the area.

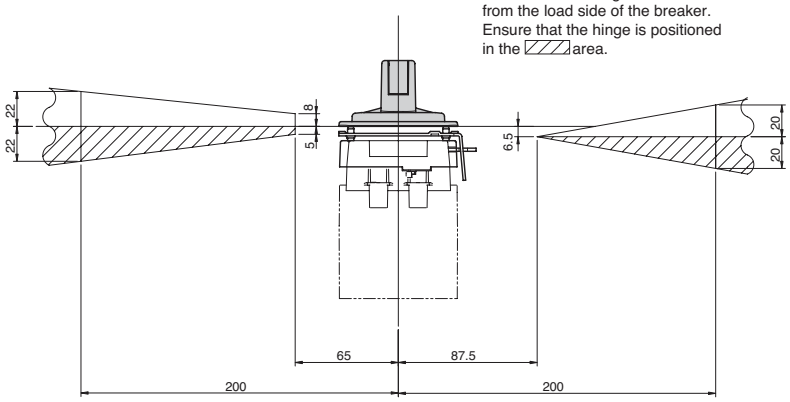

DIMENSIONS

BREAKER MOUNTED HANDLES

Tembreak 2 Lite MCCBs & Switch Disconnectors

ASL: Arrangement Standard Line ℍ: Handle Frame Centre Line ℄: Handle Centre Line

Applicable breaker types
E250-SF, E250-SCF, S250-SF E250-SJ E250-SCJ, S250-SJ, S250-SN

● Outline dimensions

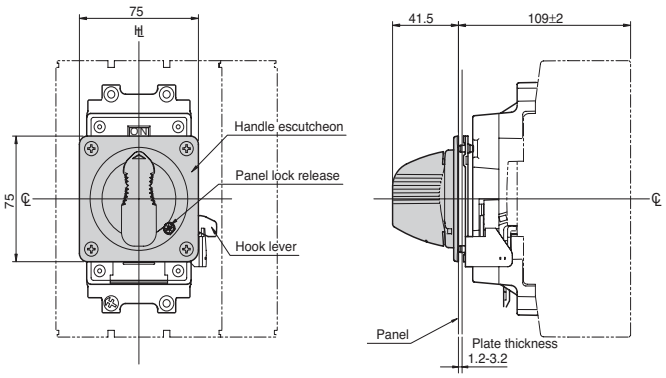

● Panel cutout dimensions

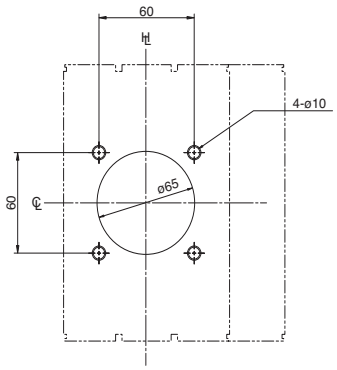

• Positions of the hinge and handle as seen from the load side of the breaker. Ensure that the hinge is positioned in the area.

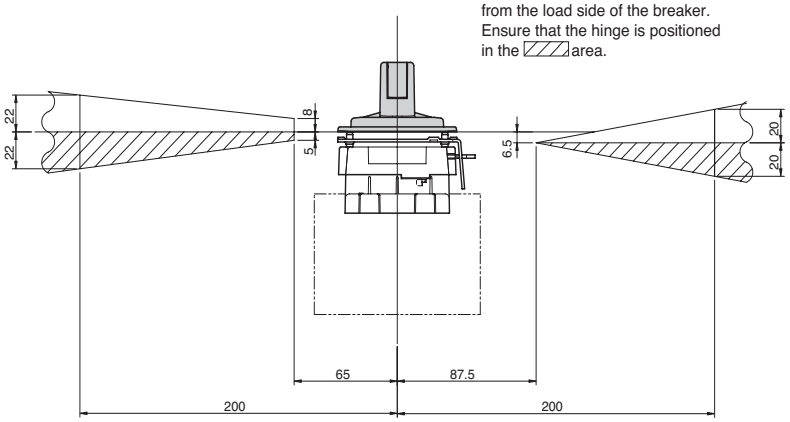

BREAKER MOUNTED HANDLES

Tembreak 2 MCCBs & Switch Disconnectors

ASL: Arrangement Standard Line ℍ: Handle Frame Centre Line ℄: Handle Centre Line

Applicable MCCB
S125, VS125

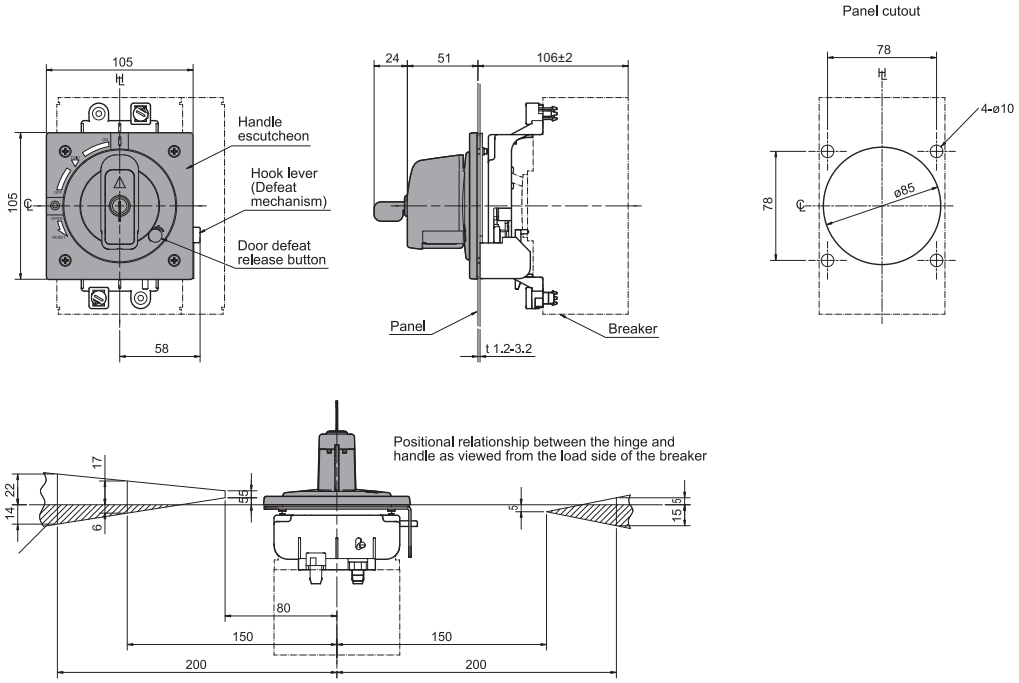

Applicable MCCB	A
S160-NJ, S250-NJ, S250-GJ, S250-NN, VS250, PVS 160	106±2
H125, L125, H160, L160, S250-NE, S250-GE, S250-PE, H250, L250	141±2

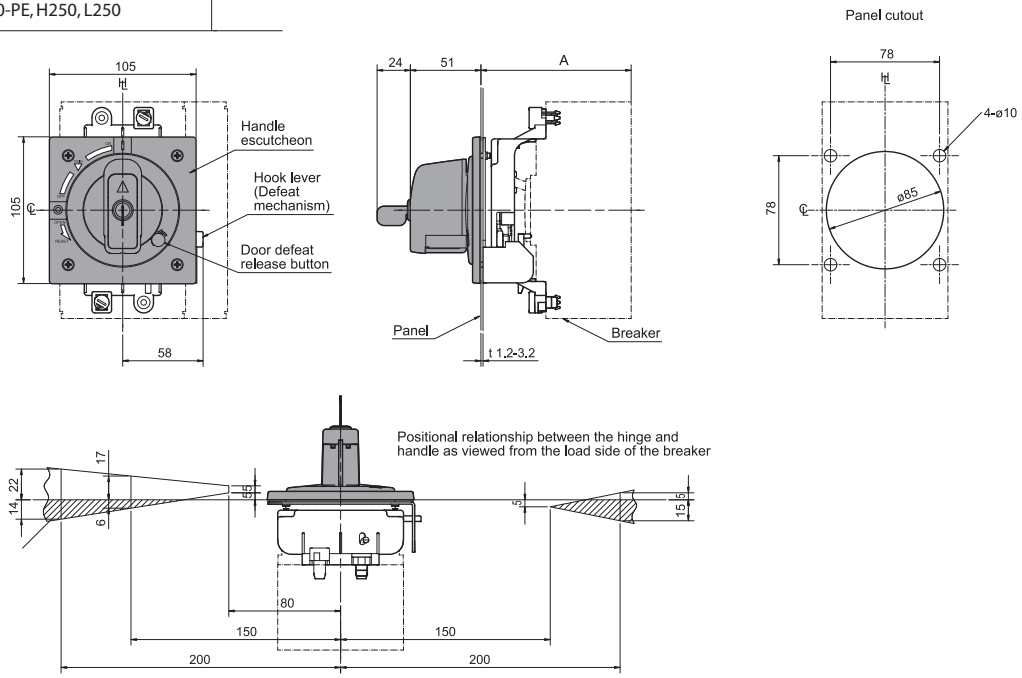

DIMENSIONS

BREAKER MOUNTED HANDLE

Tembreak 2 Lite MCCBs & Switch Disconnectors

ASL: Arrangement Standard Line ℍ: Handle Frame Centre Line ℄: Handle Centre Line

Applicable MCCB	A	B
E400, S400, E630, S630, PVS400	150±2	97
H400, L400	187±2	134

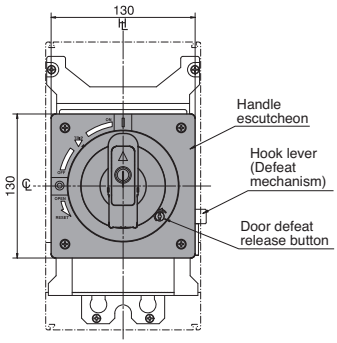

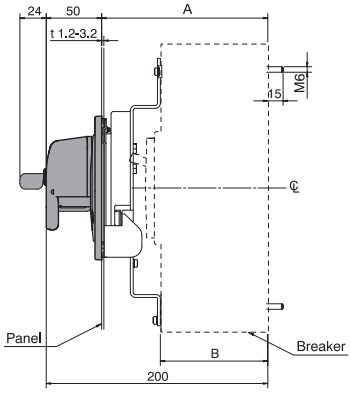

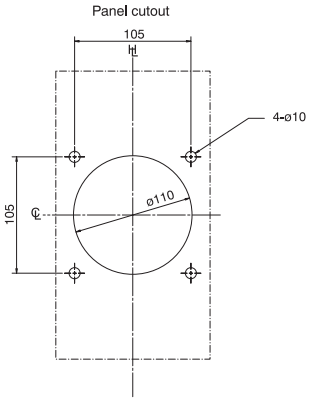

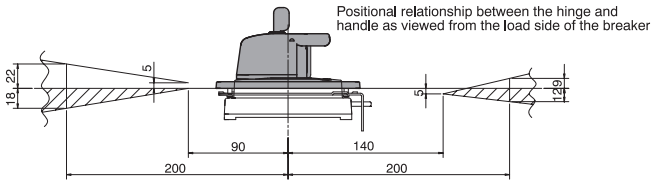

Applicable MCCB	A
S800, S1000, PVS800	150±2
H800, L800	187±2

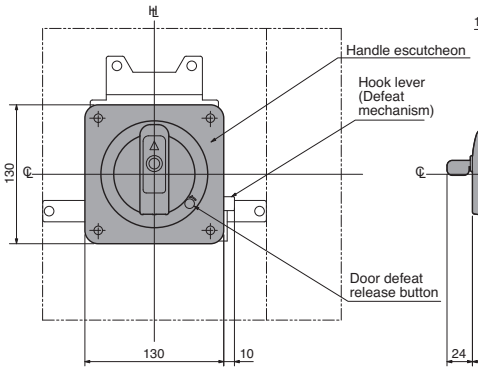

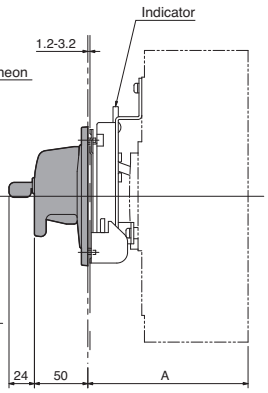

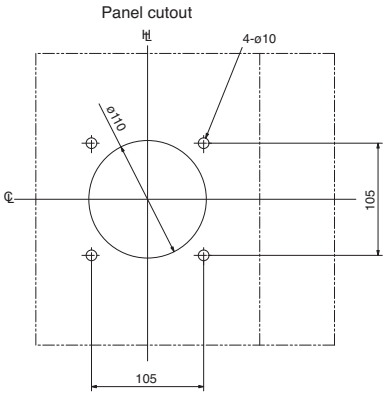

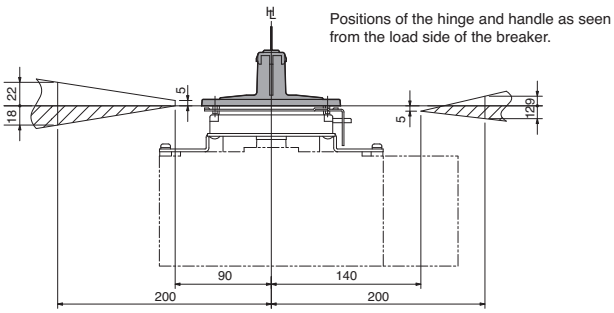

DOOR MOUNTED HANDLE

Tembreak 2 Lite MCCBs & Switch Disconnectors

ASL: Arrangement Standard Line ℍ: Handle Frame Centre Line ℄: Handle Centre Line

● Outline dimensions

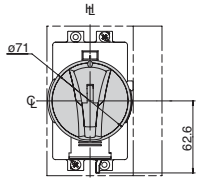

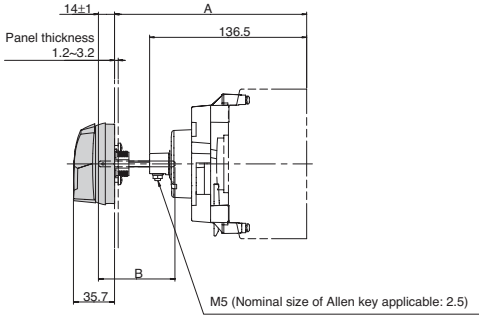

● Panel cutout dimensions

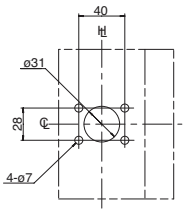

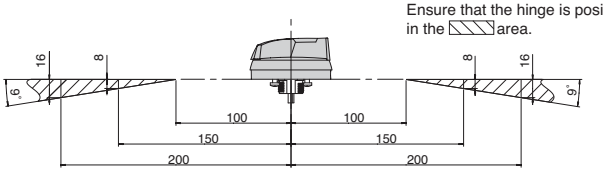

• Positions of the hinge and handle as seen from the load side of the breaker. Ensure that the hinge is positioned in the area.

Applicable breaker types	A±2	B±0.5
E160-SF S160-SCF S160-SF E160-SJ, S160-SCJ S160-SJ S160-SN	175 min.	80
	453 max.	358

Note q :
"Min (minimum)" means the minimum possible distance from the panel surface to the breaker mounting surface, which can be formed by cutting the square shaft.
"Max (maximum)" means the maximum distance of the same section, which is formed with no cutting of the square shaft.
A: Distance from the panel surface to the breaker mounting surface
B: Length of the square shaft used

● Outline dimensions

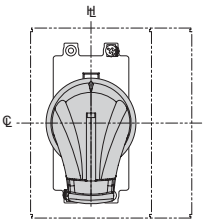

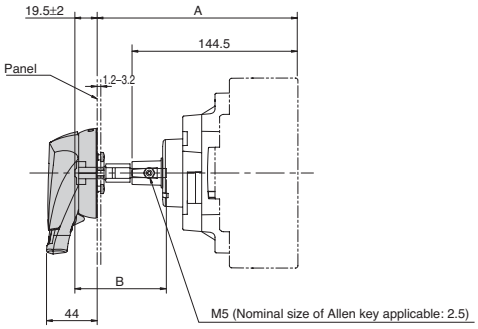

● Panel cutout dimensions

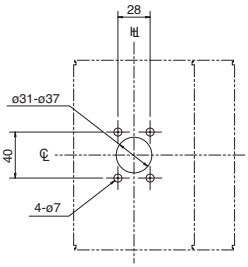

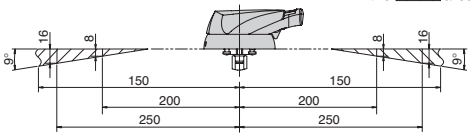

• Positions of the hinge and handle as seen from the load side of the breaker. Ensure that the hinge is positioned in the area.

Applicable breaker types	A±2q	B±0.5
E250-SF E250-SCF S250-SF E250-SJ E250-SCJ S250-SJ S250-SN	175 min.	80
	453 max.	358

Note q :
"Min (minimum)" means the minimum possible distance from the panel surface to the breaker mounting surface, which can be formed by cutting the square shaft.
"Max (maximum)" means the maximum distance of the same section, which is formed with no cutting of the square shaft.
A: Distance from the panel surface to the breaker mounting surface
B: Length of the square shaft used

DIMENSIONS

DOOR MOUNTED HANDLE

Tembreak 2 MCCBs & Switch Disconnectors

ASL: Arrangement Standard Line ℍ: Handle Frame Centre Line ℄: Handle Centre Line

Applicable MCCB	A∗1	B	C
	175 min	80	144
S125, VS125	453 max.	358	144

Min. means the minimum length for A. by cutting the shaft.
∗1: Max. means the maximum length fot A without cutting the shaft.
+ The shaft can be cut to the required length.

A: Distance from the panel surface to the breaker mounting surface
B: Length of the square shaft used

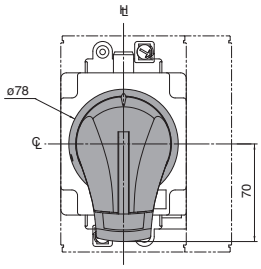

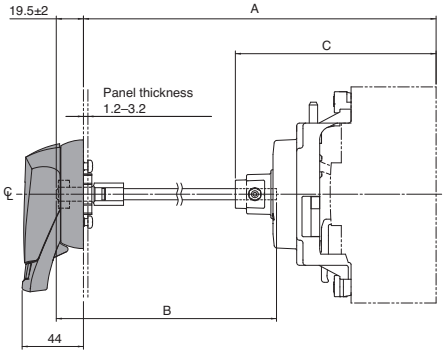

Panel cutout

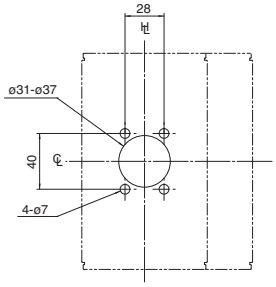

Positional relationship between the hinge and handle as viewed from the load side of the breaker. The hinge must be inside the hatched area.

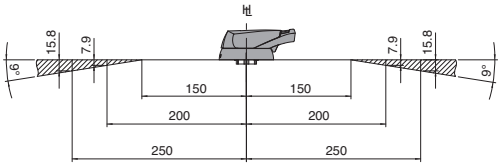

Padlock dimensions (mm)

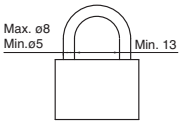

DOOR MOUNTED HANDLE

Tembreak 2 MCCBs & Switch Disconnectors

ASL: Arrangement Standard Line ℍ: Handle Frame Centre Line ℄: Handle Centre Line

Applicable MCCB	A✻1	B	C
S160-NJ,	175 min	80	144
S250-NJ, S250-GJ S250-NN, VS250, PVS160	453 max.	358	144
H125, L125, H160, L160,	210 min	80	144
S250-NE, S250-GE, S250-PE, H250, L250	488 max	358	179

Min means the length for A. by cutting the shaft.
✻1: Max. means the maximum length fot A without cutting the shaft.
+ The shaft can be cut to the required length.

A: Distance from the panel surface to the breaker mounting surface
B: Length of the square shaft used

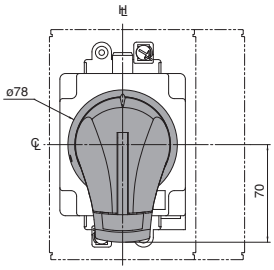

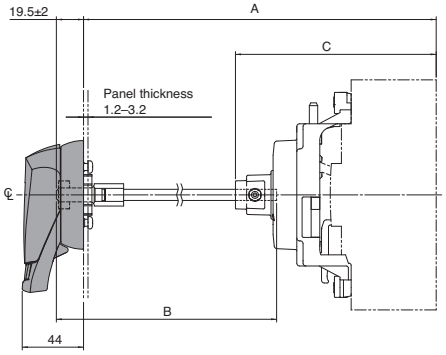

Panel cutout

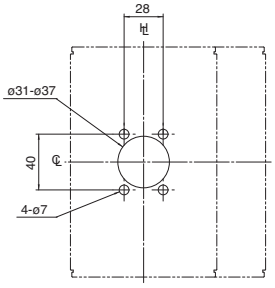

Positional relationship between the hinge and handle as viewed from the load side of the breaker. The hinge must be inside the hatched area.

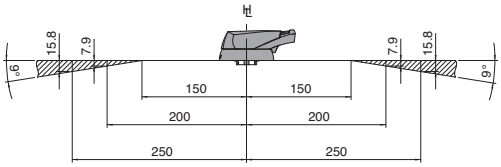

Padlock dimensions (mm)

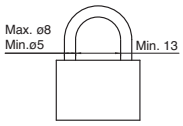

DIMENSIONS

DOOR MOUNTED HANDLE

Tembreak 2 MCCBs & Switch Disconnectors

ASL: Arrangement Standard Line ℍ: Handle Frame Centre Line ℄: Handle Centre Line

Applicable MCCB	A✻1	B	C
E400, E630,	220 min.	86	188.5
S400, S630, PVS400	456 max.	322	188.5
H400,	257 min.	86	225.5
L400	493 max.	322	225.5

✻1: Min. means the minimum length for A by cutting the shaft.
Max. means the maximum length fot A without cutting the shaft.
+ The shaft can be cut to the required length.

A: Distance from the panel surface to the breaker mounting surface
B: Length of the square shaft used

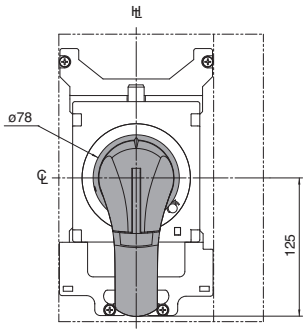

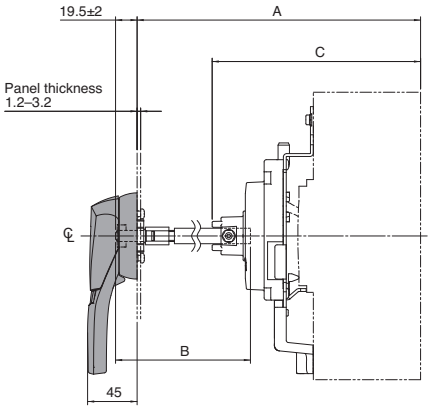

Panel cutout

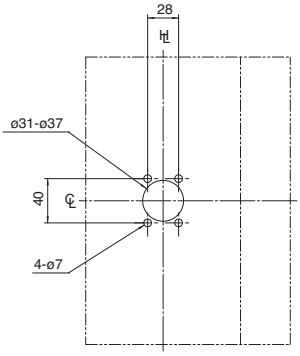

Positional relationship between the hinge and handle as viewed from the load side of the breaker. The hinge must be inside the hatched area.

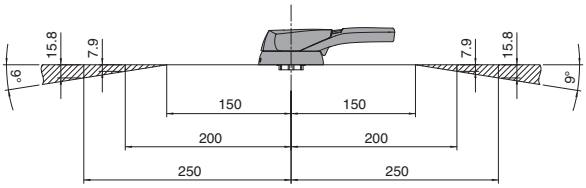

Padlock dimensions (mm)

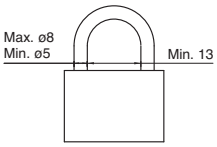

DOOR MOUNTED HANDLE

Tembreak 2 MCCBs & Switch Disconnectors

ASL: Arrangement Standard Line ℍ: Handle Frame Centre Line ℄: Handle Centre Line

Applicable MCCB	A∗1	B	C
S800, S1000, PVS800	220 min.	86	188.5
	456 max.	322	188.5
H800, L800	257 min.	86	225.5
	493 max.	322	225.5

∗1: Min. means the minimum length for A by cutting the shaft.
Max. means the maximum length fot A without cutting the shaft.
+ The shaft can be cut to the required length.

A: Distance from the panel surface to the breaker mounting surface
B: Length of the square shaft used

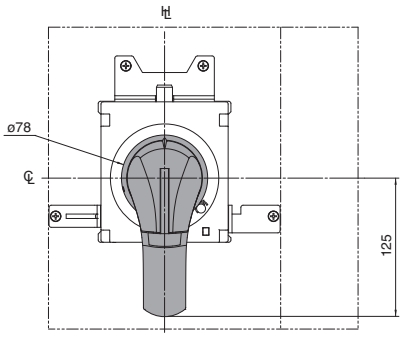

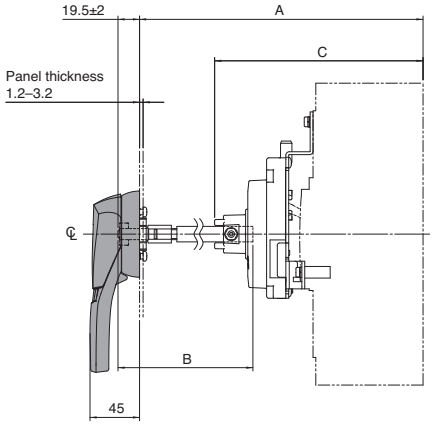

Panel cutout

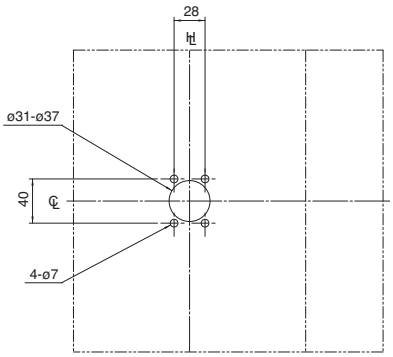

Positional relationship between the hinge and handle as viewed from the load side of the breaker. The hinge must be inside the hatched area.

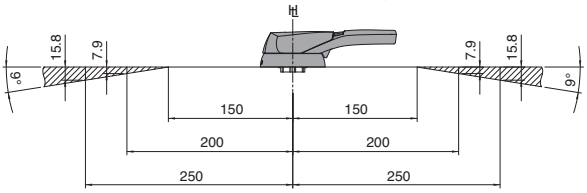

Padlock dimensions (mm)

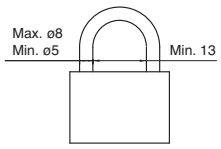

DIMENSIONS

DOOR MOUNTED HANDLE

Tembreak 2 MCCBs & Switch Disconnectors

ASL: Arrangement Standard Line ℍ: Handle Frame Centre Line ℄: Handle Centre Line

Applicable MCCB	A*1	B	C
S1250	276.5min.	86	245
	512.5max.	322	245
S1600	296.5min.	86	265
	532.5max.	322	265

*1: Min. means the minimum length for A by cutting the shaft.
Max. means the maximum length fot A without cutting the shaft.
+ The shaft can be cut to the required length.

A: Distance from the panel surface to the breaker mounting surface
B: Length of the square shaft used

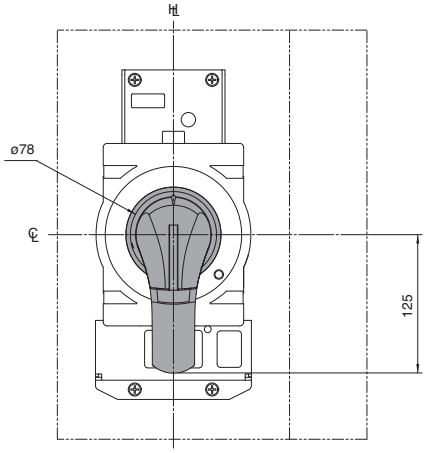

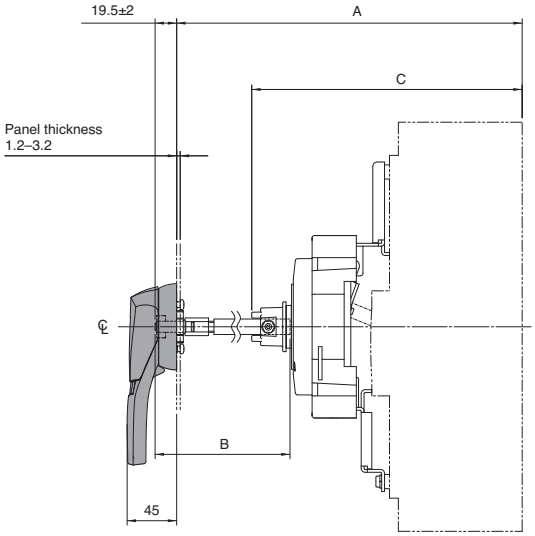

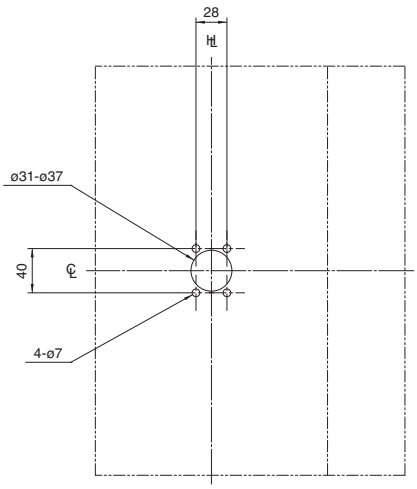

Positional relationship between the hinge and handle as viewed from the load side of the breaker. The hinge must be inside the hatched area.

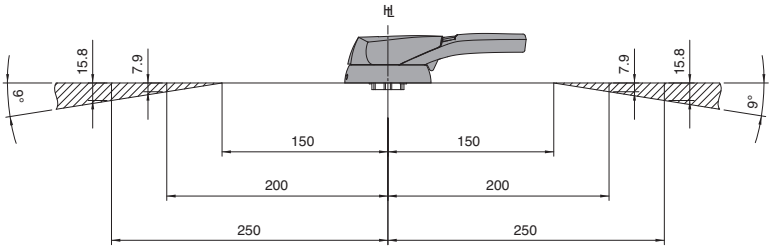

Padlock dimensions (mm)

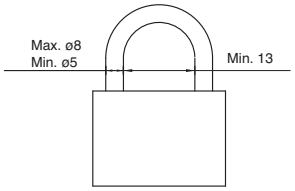

DOOR MOUNTED HANDLE

Tembreak DC MCCB Above 1000A

ASL: Arrangement Standard Line ℍ: Handle Frame Centre Line ℄: Handle Centre Line

Applicable MCCB	A∗1	B	C
XS1250ND	276.5min.	86	245
	512.5max.	322	245
XS1600ND	296.5min.	86	265
	532.5max.	322	265

∗1: Min. means the minimum length for A by cutting the shaft.
Max. means the maximum length fot A without cutting the shaft.
+ The shaft can be cut to the required length.

A: Distance from the panel surface to the breaker mounting surface
B: Length of the square shaft used

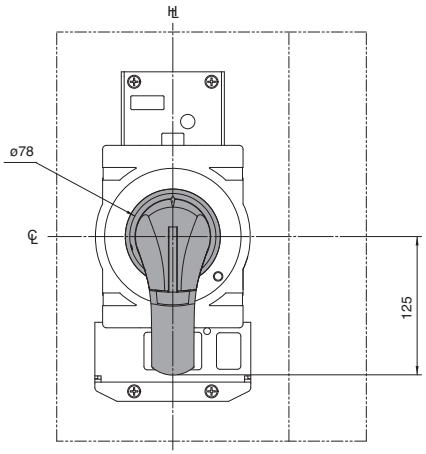

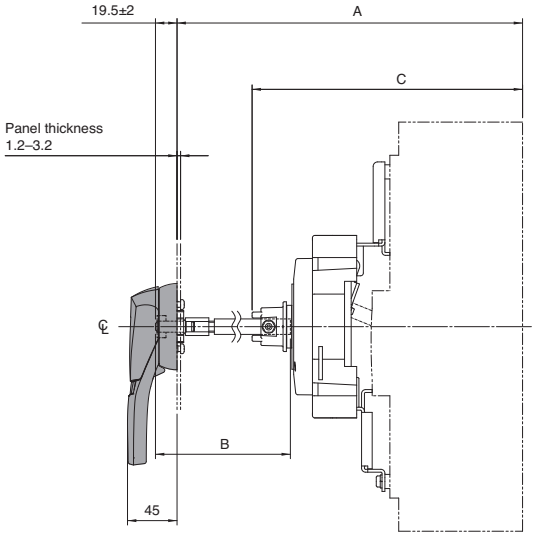

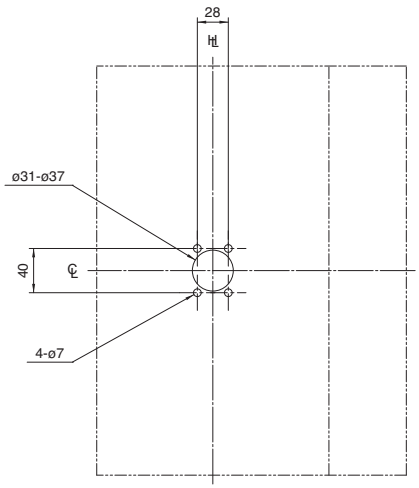

Positional relationship between the hinge and handle as viewed from the load side of the breaker. The hinge must be inside the hatched area.

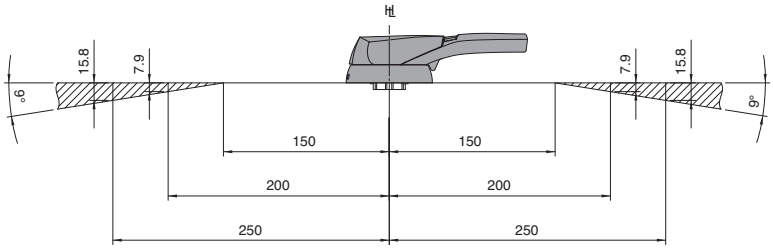

Padlock dimensions (mm)

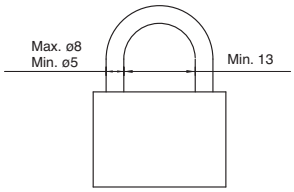

DIMENSIONS

DOOR MOUNTED HANDLE

Tembreak DC MCCB Above 2000A

ASL: Arrangement Standard Line ℍ: Handle Frame Centre Line ℄: Handle Centre Line

Applicable MCCB
XS2000ND
XS2500ND

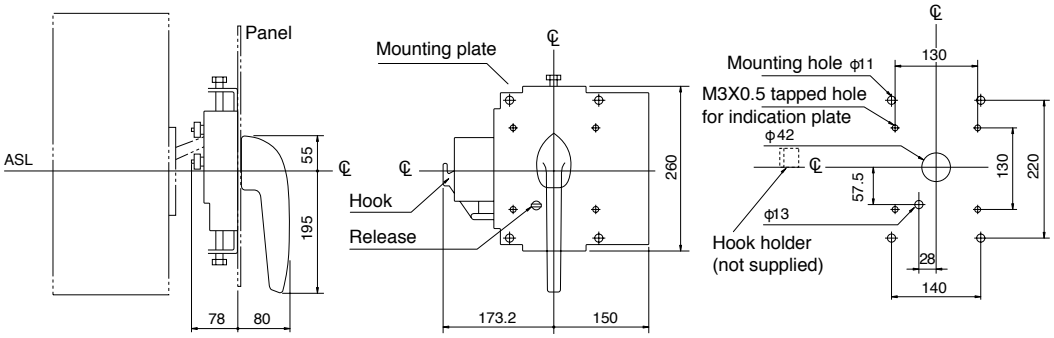

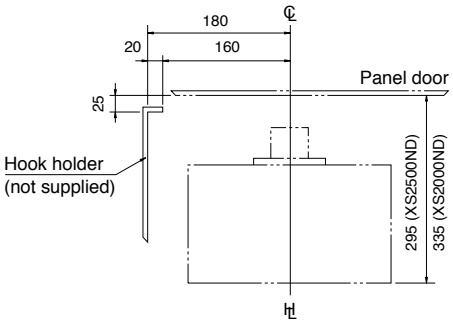

TERMINAL COVERS

Tembreak 2 Lite MCCBs & Switch Disconnectors

Terminal covers prevent live parts of the breaker from being exposed to the external environment. There are three types of terminal covers available: CF for front-connected breakers, CR for rear-connected and plug-in breakers, and CS for front-connected breakers with cable clamps. Select appropriate terminal covers depending on the type and application of the breaker.

(1) CF for front-connected breakers

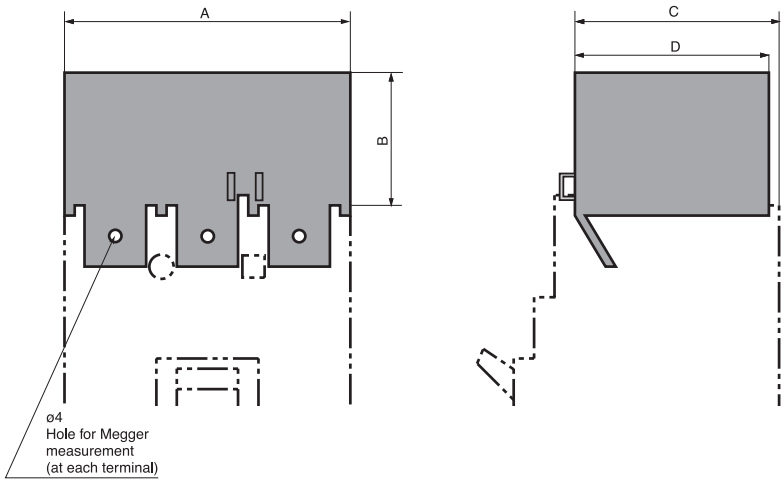

Plug-in mounted version

This version can be mounted simply by being plugged in the breaker body.

To be stated when ordering
• Please state the order codes in the table below. Covers should be ordered individually for Line and Load side.

Types and dimensions of terminal covers, units in mm

CF for front-connected breakers

Types of breakers	Terminal cover			A			B		C		D		Colour of cover G:Gray	Mounting version	
	Size	Note:	Marking codes	2 poles	3 poles	4 poles	2/3 poles	4 poles	2/3 poles	4 poles	2/3 poles	4 poles		Plug-in mounted	Screw-mounted
E160-SF, S160-SCF, S160-SF, E160-SJ, S160-SCJ, S160-SJ, S160-SN	Large		——	——	75	100	50	50	61	61	60.3	60.3	G	○	——
S160-SCF	Large		——	50	75	100	50	50	61	61	60.3	60.3	G	○	——
E250-SF, E250-SCF, S250-SF, E250-SJ, E250-SCJ, S250-SJ, S250-SN	Large	②	T2CF25L＊SW	147.5	147.5	196	55	55	59	59	57.5	57.5	G	○	——
	Large		T2CF25L＊SL	105	105	140	55	55	59	59	57.5	57.5	G		

Notes:
①. The asterisk indicates the number of poles. Please state the number of poles at the asterisk position when ordering.
②. Applicable to 3-pole breakers with spread extension bars.

(2) CR for rear-connected
CS for front-connected breakers with cable clamps

Fig.1

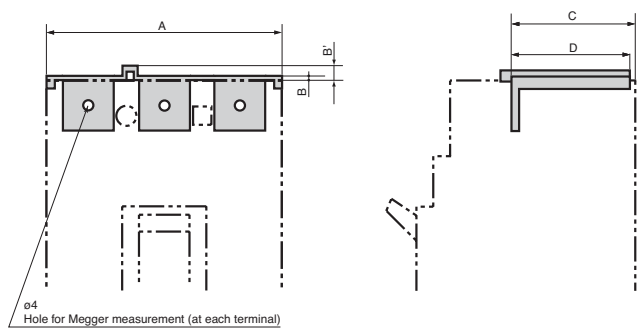

To be stated when ordering
- Please state "with CR" if ordering along with the breaker.
- Covers should be ordered individually for Line and Load side.

Types and dimensions of terminal covers, units in mm

CR for rear-connected

Types of breakers	A			B		B'	C		D		Colour of cover G: Gray	Figure
	2poles	3 poles	4 poles	2/3 poles	4 poles		2/3 poles	4 poles	2/3 poles	4 poles		
E160-SF, S160-SCF, S160-SF, E160-SJ, S160-SCJ, S160-SJ, S160-SN	——	75	100	5.5	5	——	61	61	60.3	60.3	G	1
S160-SCF	50	75	100	5.5	5	——	61	61	60.3	60.3	G	1
E250-SF, E250-SCF, S250-SF, E250-SJ, E250-SCJ, S250-SJ, S250-SN	105	105	140	2.3	2.3	5.3	58.6	58.6	57.1	57.1	G	1

CS for front-connected breakers with cable clamps

Types of breakers	A		B	B'	C	D	Colour of cover G: Gray	Figure
	3 poles	4 poles						
E160-SF, S160-SCF, S160-SF, E160-SJ, S160-SCJ, S160-SJ, S160-SN	75	100	55	——	61	60.3	G	1
E250-SF, E250-SCF, S250-SF, E250-SJ, E250-SCJ, S250-SJ, S250-SN	105	140	2.3	5.3	58.6	57.1	G	1

TERMINAL COVERS

Tembreak 2 MCCBs & Switch Disconnectors

Terminal Covers for Front Connected MCCBs (CF)

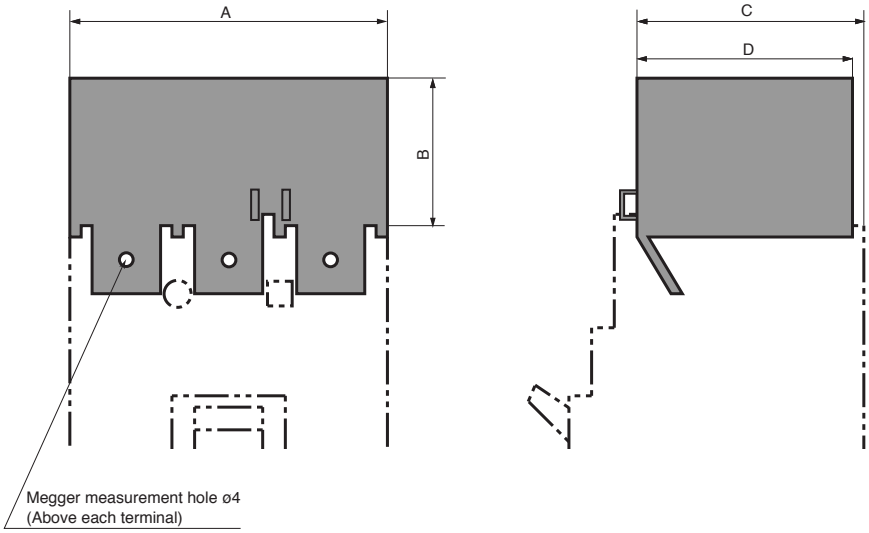

Plug-in mounted version

This version can be mounted simply by being plugged in the breaker body.

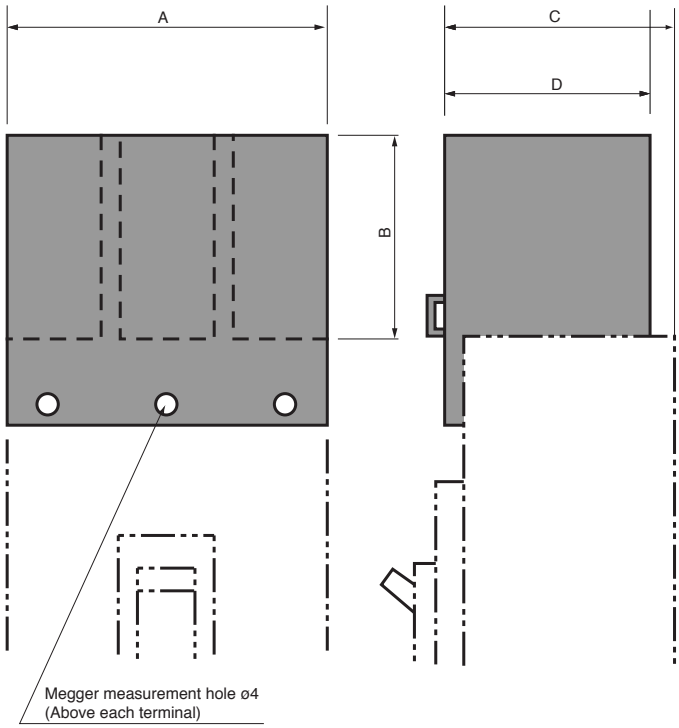

Screw-mounted version

The terminal covers for 630 to 1000AF are mounted to the breakers using tapping screws. The terminal cover for 1250AF is mounted using insert nuts on the breaker cover using screws. The insert nuts do not come standard with the breaker. Please be sure to state "with terminal cover (CF)" when ordering the breaker.

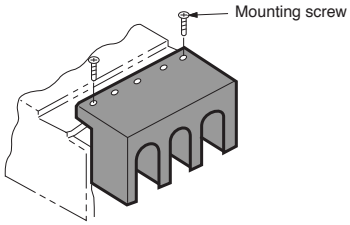

DIMENSIONS

TERMINAL COVERS

Tembreak 2 MCCBs & Switch Disconnectors

Terminal Covers for Cable Clamp Terminals Type MCCBs (CS)

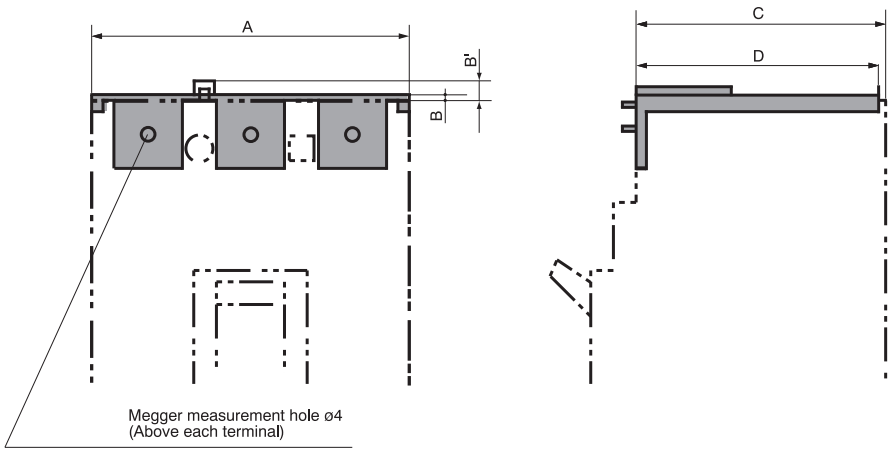

MCCB type	Connection	A			B			B'	C			D			Mounting version	
		1P	3P	4P	1P	3P	4P	3P, 4P	1P	3P	4P	1P	3P	4P	Plug-in mounted	Screw-mounted
S125, VS125	Front conn.	30	90	120	40	40	40	o	48	48	48	46	46	46	ō	—
	Cable clamp	30	90	120	2.5	2.5	2.5	6	62.5	61	61	60	59.5	59.5	ō	—
S160,-NJ, S160NN S250-NJ, S250-GJ, S250-NN, VS250, PVS160	Front conn. (1)	35	105	140	55	55	55	o	54	54	54	52	52	52	ō	—
	Cable clamp	35	105	140	2.5	2.5	2.5	6	63	61	61	49.5	59.5	59.5	ō	—
H125, L125, H160, L160, S250-NE, S250-GE, S250-PE H250, L250	Front conn. (1)	o	105	140	o	55	55	o	o	89	89	o	87	87	ō	—
	Cable clamp	o	105	140	o	2.5	2.5	4.5	o	96	96	o	59.5	59.5	ō	—
E400, S400 E630, S630 PVS400	Front conn. Wide type	o	180	240	o	110	114	o	o	97	98	o	96	98	ō	—
	Front conn. Straight type	o	140	185	o	85	85	o	o	97	97	o	94.5	94.5	ō	—
	Cable clamp	o	140	185	o	3	3	4.5	o	97	97	o	93	93	ō	—
H400, L400	Front conn. Wide type	o	180	240	o	110	114	o	o	134	135	o	96	98	ō	—
	Front conn. Straight type	o	140	185	o	85	85	o	o	134	134	o	94.5	94.5	ō	—
	Cable clamp	—	140	185	o	3	3	4.5	o	134	134	o	93	93	ō	—
S800, S1000, PVS800	Front conn. (3)	—	215	285	—	130	130	—	—	99.5 (102)	99.5 (102)	—	99 (101.5)	99 (101.5)	—	ō
H800, L800	Front conn. (2) (3)	—	215	285	—	130	130	—	—	99.5 (139)	99.5 (139)	—	99 (101.5)	99 (101.5)	—	ō
S1250	Front conn. (3)	—	215	285	—	130	130	—	—	115	115	—	99 (102.5)	99 (102.5)	—	ō

Notes:
(1) Not suitable when extension bars (FB) are fitted.
(2) There will be an approx. 40 mm gap between the bottom of the terminal cover and the breaker mounting surface.
(3) Values in brackets indicate the distance to the head of terminal cover mounting screws.

TERMINAL COVERS

Tembreak 2 MCCBs & Switch Disconnectors

Terminal Covers for Rear Connected and Plug-in MCCBs (CR)

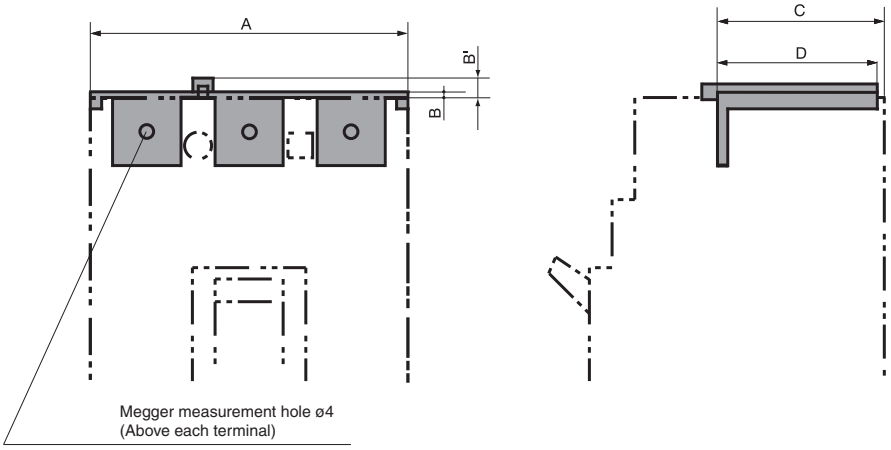

Plug-in mounted version
This version can be mounted simply by being plugged in the breaker body.

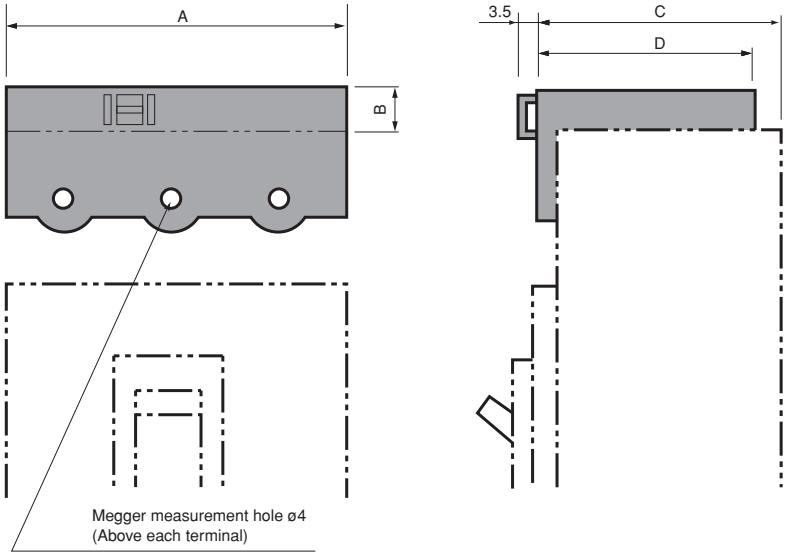

Screw-mounted version
The terminal covers for 630 to 1000AF are mounted to the breakers using tapping screws.

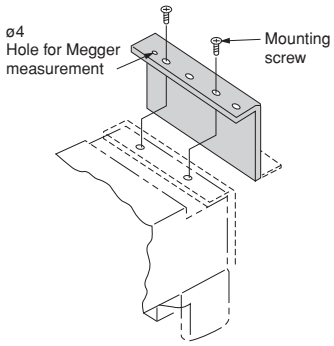

MCCB type	A		B		B'	C		D		Mounting version	
	3 poles	4 poles	3 poles	4 poles		3 poles	4 poles	3 poles	4 poles	Plug-in mounted	Screw-mounted
S125, VS125	90	120	2	2	6	41.5	41.5	40.5	40.5	ō	—
S160, S250-NJ, S250-GJ, S250-NN, VS250, PVS160	105	140	2	2	6	42.5	42.5	39.5	39.5	ō	—
H125, L125, H160, L160, S250-NE, S250-GE, S250-PE, H250, L250	105	140	2	2	6	77.5	77.5	39.5	39.5	ō	—
E400, S400, E630, S630, PVS400	140	185	3	3	5	97	97	93	93	ō	—
H400, L400, (1)	140	185	3	3	5	134	134	93	93	ō	—
S800, S1000 (2) PVS800	206	280	14	18	—	101 (103.5)	99 (101.5)	100.5 (103)	98 (100.5)	—	ō
H800, L800 (2)	206	280	14	18	—	138 (140.5)	136 (138.5)	137.5 (140)	135 (137.5)	—	ō

Notes:
(1): There will be an approx. 40 mm gap between the bottom of the terminal cover and the breaker mounting surface.
(2): Values in brackets indicate the distance to the head of terminal cover mounting screws.

DIMENSIONS

INTERPOLE BARRIERS

Tembreak 2 Lite MCCBs & Switch Disconnectors

Interpole barriers serve to enhance electrical insulation between pole and prevent short-circuit due to electrically conductive foreign matter. Combined use of interpole barriers and terminal covers (standard type) is not possible.

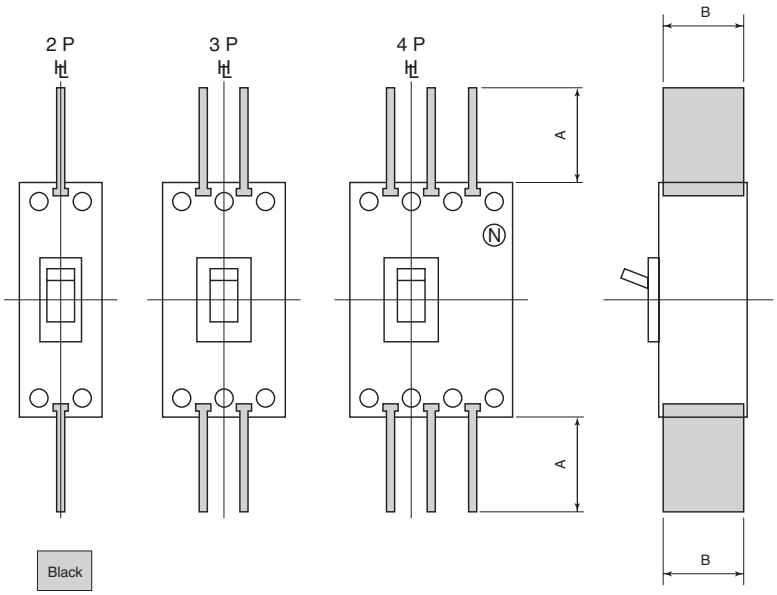

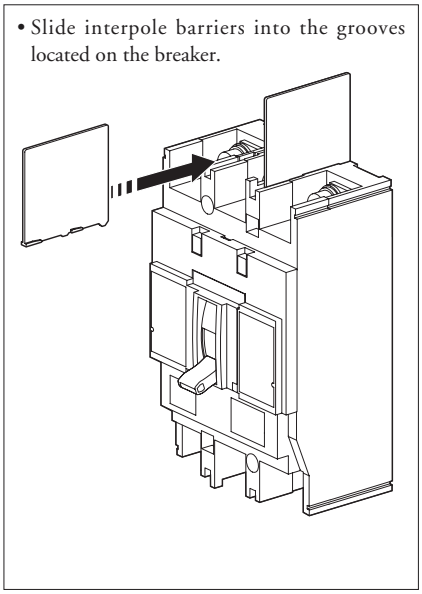

■ To be stated when ordering
Please state the type when ordering. One set contains two barriers.
Caution: Be sure to use the interpole barriers supplied with the breaker in order to prevent accidents.

Types and dimensions of interpole barriers, units in mm

Types of breakers	A	B
E160-SF, S160-SCF, S160-SF, E160-SJ, S160-SCJ, S160-SJ, S160-SN	50	55
E250-SF, E250-SCF, S250-SF, E250-SJ E250-SCJ, S250-SJ, S250-SN	101	53

Note: Line side interpole barriers are supplied as standard for all front connected breakres.

INTERPOLE BARRIERS

Tembreak 2 MCCBs & Switch Disconnectors

Terminal Interpole Barriers (BA)

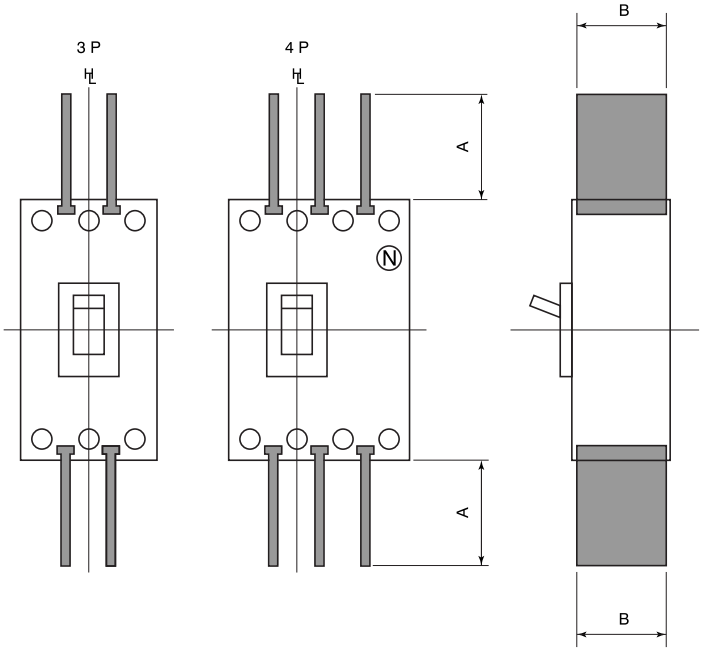

MCCB type	A	B
S125, VS125	47	53
S160, E250, S250-NJ, S250-GJ S250-NN, VS250, PVS160	100	53
H125, L125, H160, L160, S250-NE, S250-GE, S250-PE, H250, L250	100	88
E400, S400, E630, S630, PVS400	110	95
H400, L400	110	95
S800, H800, L800, S1000, PVS800	110	95

DIMENSIONS

TERMINAL BLOCKS FOR FRONT-CONNECTED AND REAR-CONNECTED MCCBs TERMINAL BLOCKS (TF)

Tembreak 2 Lite MCCBs & Switch Disconnectors

6 Terminals Vertical Leading Type with 160A Frame

Mounting position/typical terminal arrangement

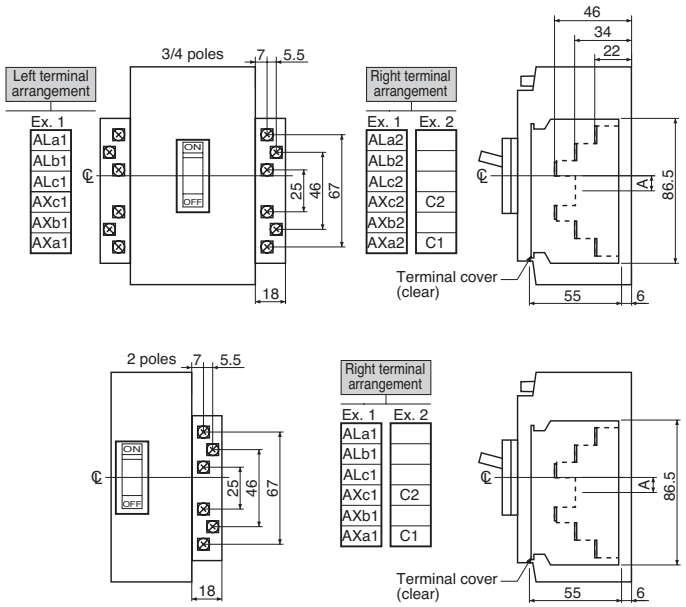

Dimensions, mm

Types of breakers	A
S160-SCF (2/3/4 poles)	9
E160-SF, S160-SCF, S160-SF, E160-SJ, S160-SCJ, S160-SJ,S160-SN (3/4 poles)	9

Notes:

1) Tightening torque of M3.5 terminal screws: 0.9 – 1.2 N・m

2) Applicable wire size: 2.0mm^2 max

TERMINAL BLOCKS FOR FRONT-CONNECTED AND REAR-CONNECTED MCCBs TERMINAL BLOCKS (TF)

Tembreak 2 Lite MCCBs & Switch Disconnectors

6 Terminals Vertical Leading Type with 250A Frame

Mounting position/typical terminal arrangement

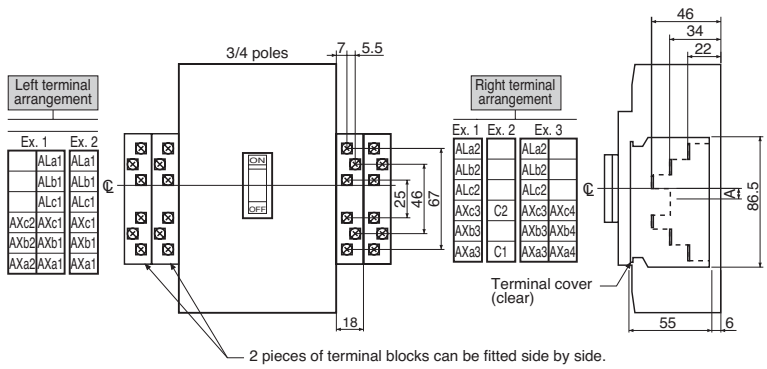

Dimensions, mm

Types of breakers	A
E250-SF, E250-SCF, S250-SF, E250-SJ E250-SCJ, S250-SJ, S250-SN	7

Notes:

1) Tightening torque of M3.5 terminal screws: 0.9 – 1.2 N · m

2) Applicable wire size: 2.0mm² max

SECTION 6

DIMENSIONS

TERMINAL BLOCKS FOR FRONT-CONNECTED AND REAR-CONNECTED MCCBs

Tembreak 2 MCCBs & Switch Disconnectors

11 Terminals

Left terminal designations
Example

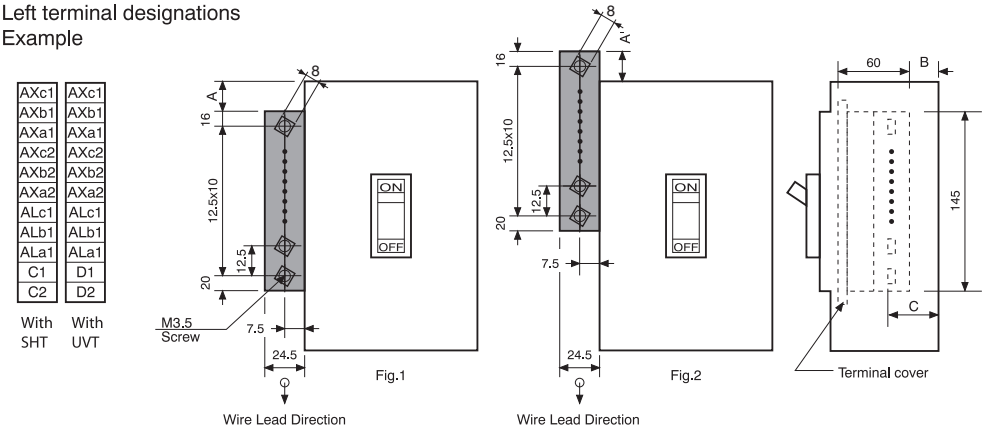

MCCB type	A	A'	B	C	Fig
S125, VS125	—	3	0.5	40	2
S160, E250, S250-NJ, PVS160 S250-GJ, S250-NN, VS250	2	—	0.5	40	1
H125, L125, H160, L160, S250-NE, S250-GE, S250-PE, H250, L250	2	—	35.5	75	1

Comments:
1. The tightening torque for the M3.5 terminal screws is 0.9 to 1.2 N·m.
2. Connection wire size is 2.5mm² (max).

11 Terminals

Left terminal designations

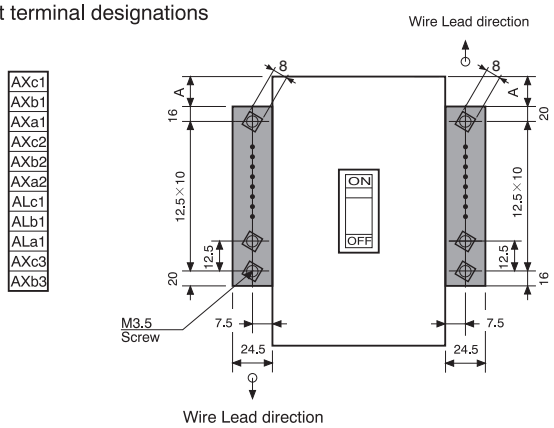

Right terminal designations

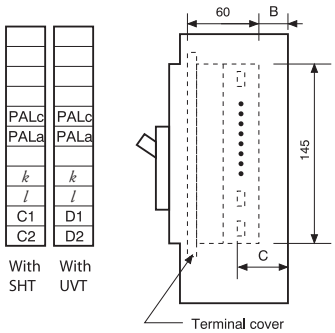

MCCB type	A	B	C
E400, S400, E630, S630, PVS400	39.5	30.5	70
H400, L400	39.5	67.5	107
S800, S1000, PVS800	31	30.5	70
H800, L800	31	67.5	107

Comments:
1. The tightening torque for the M3.5 terminal screws is 0.9 to 1.2 N·m.
2. Connection wire size is 2.5mm² (max).
3. When you specify Ground Fault Trip on electronic MCCBs with 3 poles the terminal block is automatically fitted to connect with the external neutral CT for 3 phases 4 wires system.

TERMINAL BLOCKS FOR FRONT-CONNECTED AND REAR-CONNECTED MCCBs

Tembreak 2 MCCBs & Switch Disconnectors

6 Terminals

Left terminal designations
Example

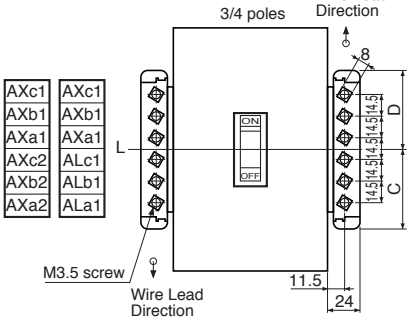

Right terminal designations
Example

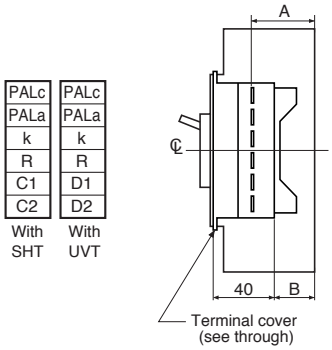

MCCB Type	A	B	C	D
E125, S125, VS125	42.5	27	53	53
S160, S250-NJ, S250-GJ, S250-NN, VS250, PVS160	42.5	27	53	53
H125, L125, H160, L160, S250-NE, S250-GE, S250-PE, H250, L250	77.5	62	53	53
E400, S400, E630, S630, PVS400	72.5	57	43	63
H400, L400	109.5	94	43	63
S800, S1000, PVS800	72.5	57	23.5	82.5
H800, L800	109.5	94	23.5	82.5

Comments:
1. The tightening torque for the M3.5 terminal screws is 0.9 to 1.2 N·m.
2. Connection wire size is 1.25mm² (max).

Left terminal designations
Example

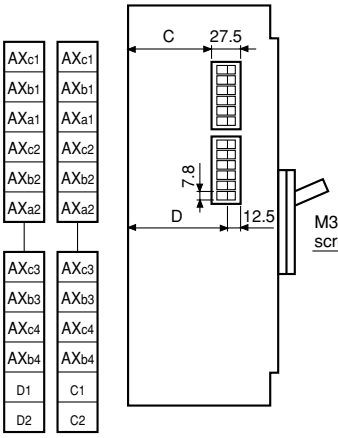

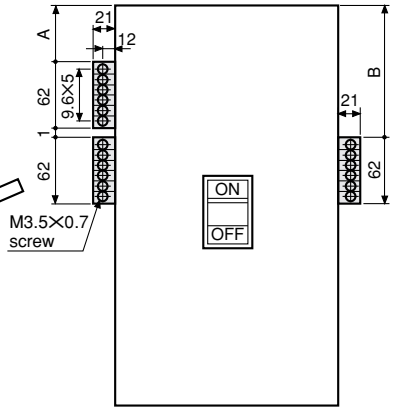

Right terminal designations
Example

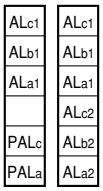

MCCB Type	A	B	C	D
S1250	51	114 (124)	57	72
S1600	51	114 (124)	77	92

Comments:
1. Values in parentheses applies to 4-pole breakers.
2. Tightening torque of M3.5 terminal screws: 0.9 1.2 N·m.
3. Connection wire size: 2.0mm² max x 2.

DIMENSIONS

TERMINAL BLOCKS FOR FRONT-CONNECTED AND REAR-CONNECTED MCCBs

Tembreak DC MCCB Above 1000A

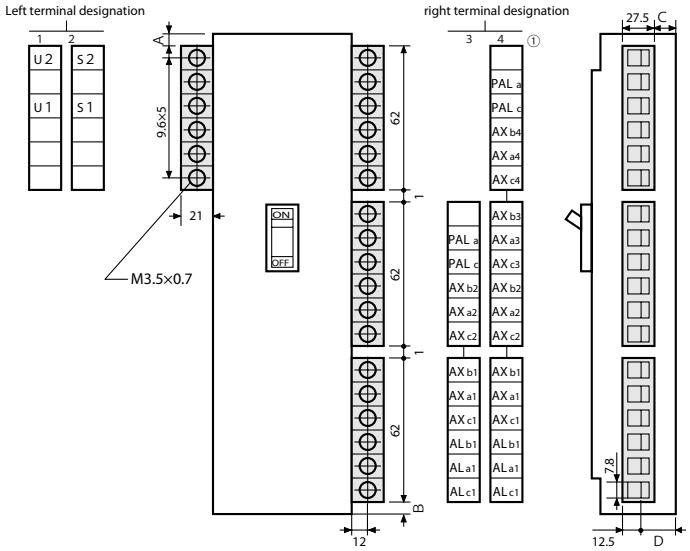

	type	A	B	C	D
1000 1200	XS1250ND XS1600ND	51	194 (184)	77	92
2000	XS2000ND	54	208	100	115
2500	XS2500ND	54	208	100	115

OCR POWER SUPPLY FOR ELECTRONIC PROTECTION (STANDARD TYPE)

Tembreak 2 MCCBs & Switch Disconnectors

MCCB Type
S250-NE, S250-GE, S250-PE, H250-NE

Connection diagram

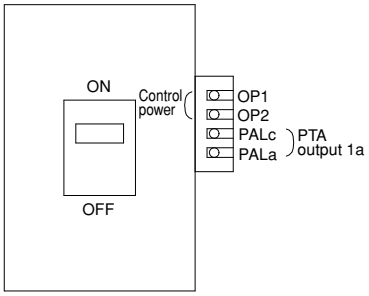

Notes: Separate installation of the OCR power supply is not available.

Mounting dimensions

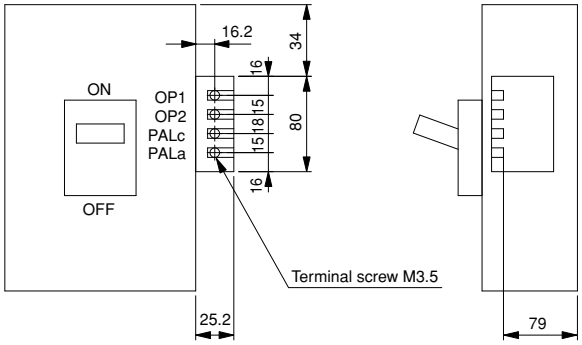

Notes: 1. Tightening torque of terminal screws: 0.9 – 1.2 N·m
2. Applicable wire size: 2.0 mm^2 max

DIMENSIONS

OCR POWER SUPPLY FOR ELECTRONIC PROTECTION (STANDARD TYPE)

Tembreak 2 MCCBs & Switch Disconnectors

MCCB Type		A	B	C	D
S400-NE, S400-GE, S400-PE, E630-NE, S630-CE, S630-GE		71	74	25.2	16.2
H400-NE, L400-NE		71	111	25.2	16.2
S800, S1000		62.5	74	25.2	16.2
H800, L800		62.5	111	25.2	16.2
S1250	3P	33	72	21	12
	4P	43	72	21	12
S1600	3P	33	92	21	12
	4P	43	92	21	12

Connection diagram

OCR power supply installed on the breaker

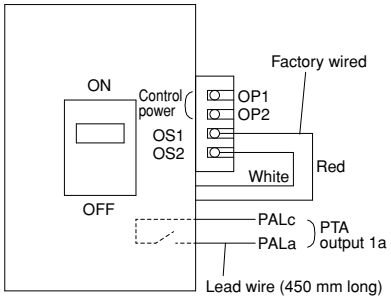

OCR power supply installed separately to the breaker

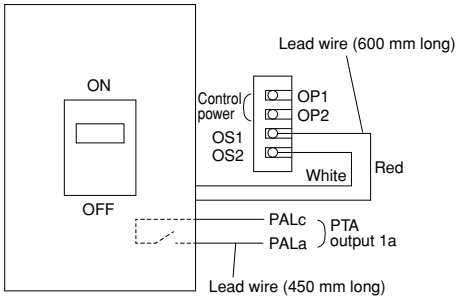

Mounting dimensions

OCR power supply installed on the breaker

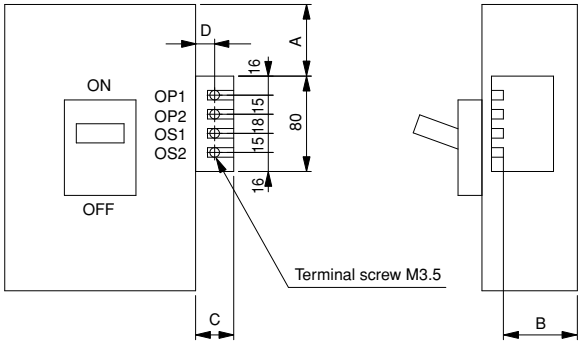

Notes: 1. Tightening torque of terminal screws: 0.9 – 1.2 N·m
2. Applicable lead wire size: 2.0 mm^2 max

OCR power supply installed separately to the breaker

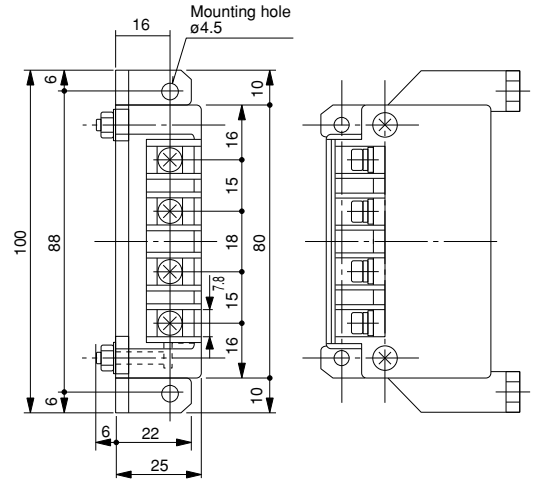

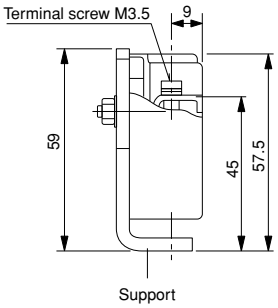

OCR POWER SUPPLY FOR ELECTRONIC PROTECTION (WITH LCD)

Tembreak 2 MCCBs & Switch Disconnectors

MCCB Type	A	B	C	D
S400-NE, S400-GE, S400-PE, E630-NE, S630-CE, S630-GE	71	74	25.2	16.2
H400-NE, L400-NE	71	111	25.2	16.2
S800, S1000	62.5	74	25.2	16.2
H800, L800	62.5	111	25.2	16.2

Connection diagram

OCR power supply installed on the breaker

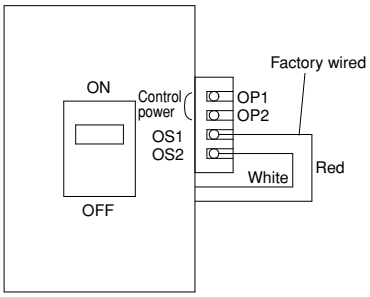

OCR power supply installed separately to the breaker

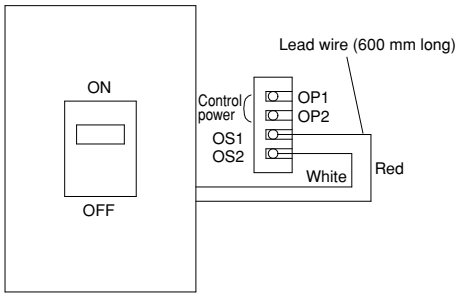

Mounting dimensions

OCR power supply installed on the breaker

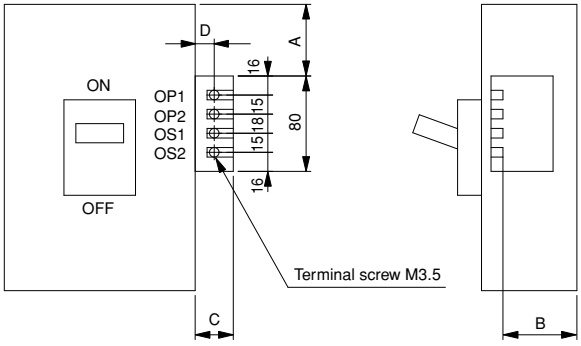

Notes: 1. Tightening torque of terminal screws: 0.9 – 1.2 N·m
2. Applicable lead wire size: 2.0 mm^2 max

OCR power supply installed separately to the breaker

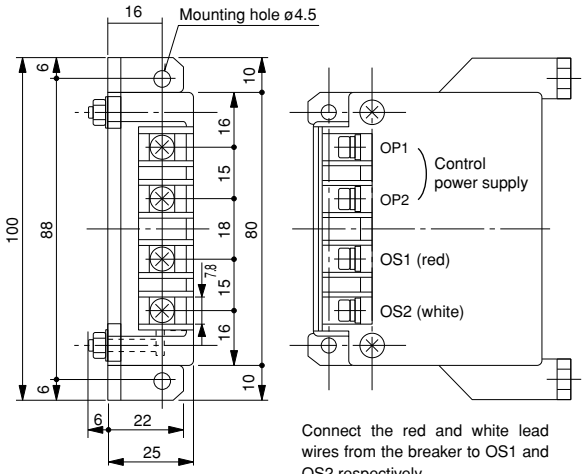

Connect the red and white lead wires from the breaker to OS1 and OS2 respectively.
(Max lead wire length : 600 mm)

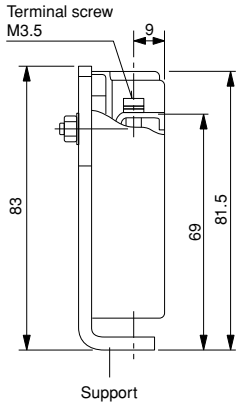

DIMENSIONS

PANEL CUT-OUT FOR 400-630AF MCCB WITH LCD DISPLAY

Tembreak 2 MCCBs & Switch Disconnectors

HL: Handle Frame Centre Line

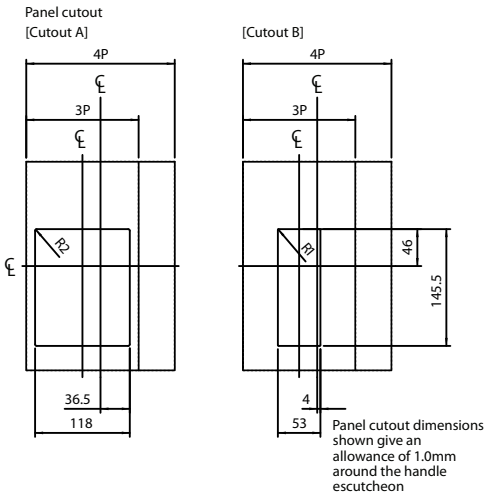

Panel Cut-out for 800-1000AF MCCB with LCD Display

ASL: Standard Line Arrangement HL: Handle Frame Centre Line

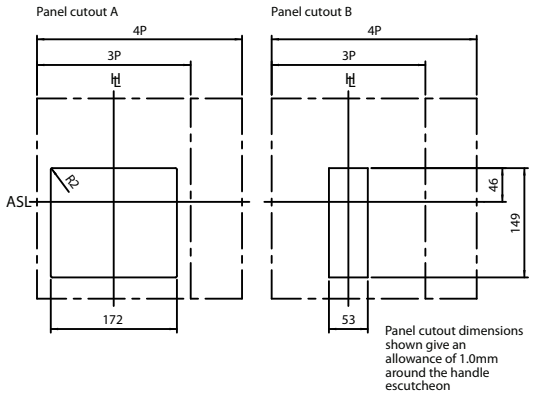

SLIDE INTERLOCKS

Tembreak 2 Lite MCCBs & Switch Disconnectors

ASL: Arrangement Standard Line ℍ: Handle Frame Centre Line ℄: Handle Centre Line

Dimensions mm

Types of breakers	Number of poles	Breaker connection method
E160-SF, S160-SCF, S160-SF, E160-SJ, S160-SCJ, S160-SJ, S160-SN	3	FC,RC
	4	FC,RC

Panel cutout (front view)

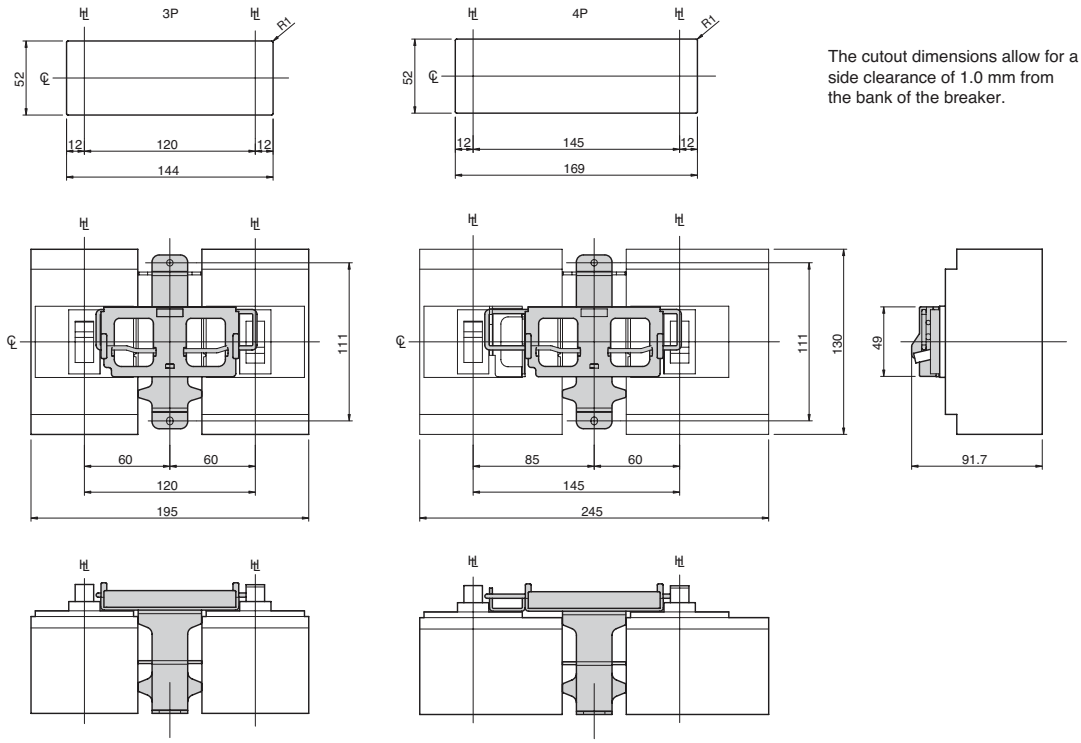

The cutout dimensions allow for a side clearance of 1.0 mm from the bank of the breaker.

Drilling plan (front view)

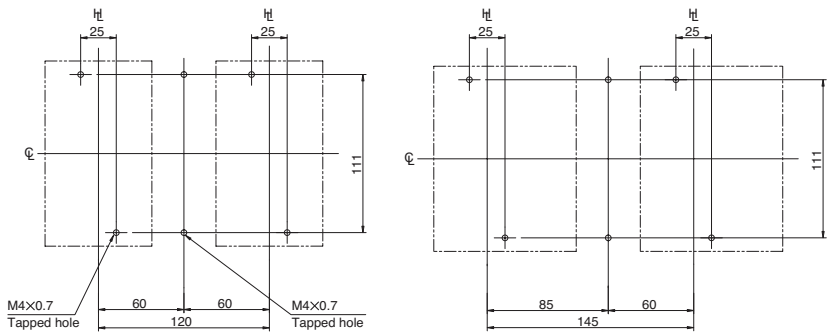

DIMENSIONS

SLIDE INTERLOCKS

Tembreak 2 Lite MCCBs & Switch Disconnectors

ASL: Arrangement Standard Line ℍ: Handle Frame Centre Line ℄: Handle Centre Line

Dimensions mm

Types of breakers	Number of poles	Breaker connection method
E250-SF, E250-SCF, S250-SF, E250-SJ E250-SCJ, S250-SJ, S250-SN	3	FC,RC
	4	FC,RC

Panel cutout (front view)

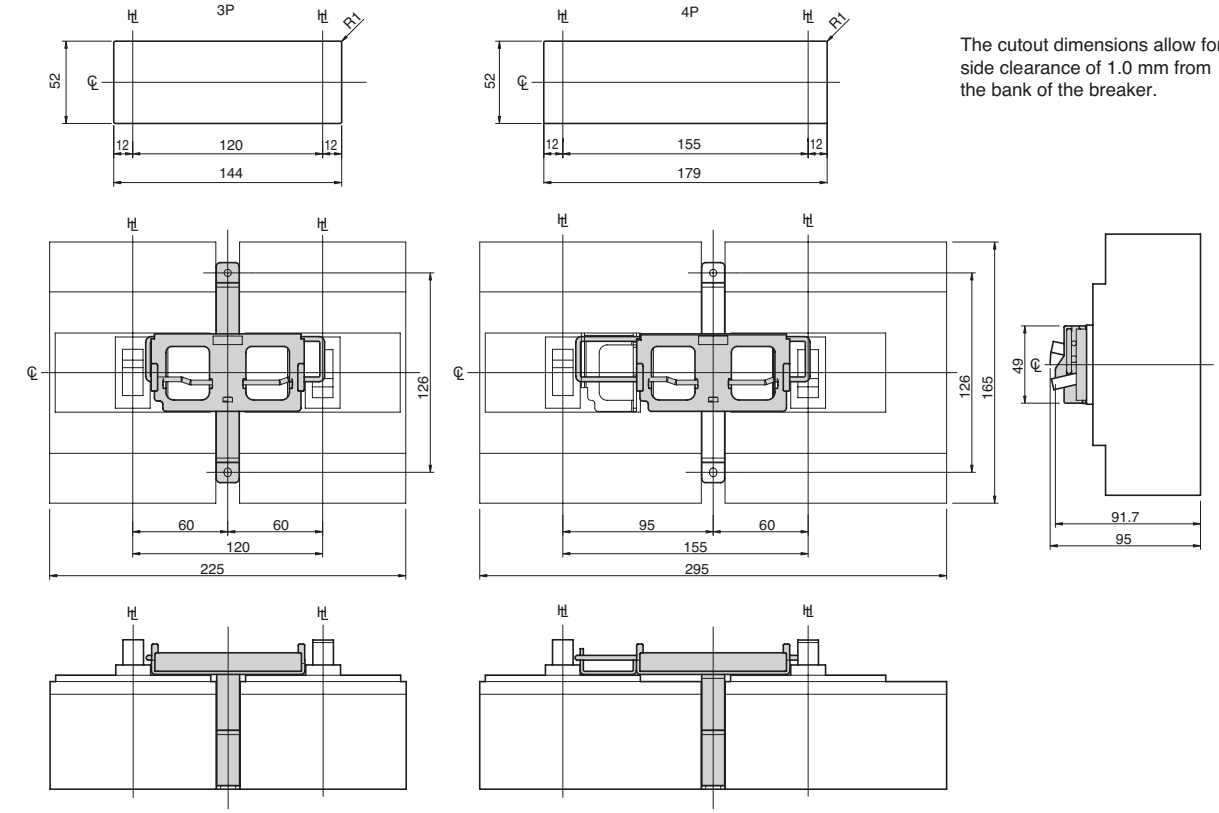

The cutout dimensions allow for a side clearance of 1.0 mm from the bank of the breaker.

Drilling plan (front view)

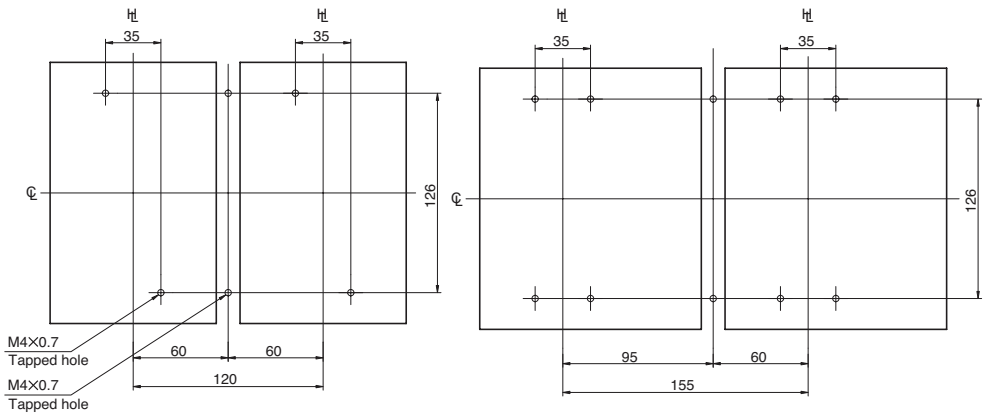

SLIDE INTERLOCKS

Tembreak 2 MCCBs & Switch Disconnectors

ASL: Arrangement Standard Line ℍ: Handle Frame Centre Line ℄: Handle Centre Line

Mechanical Interlocks slide type (MS)
For 125A frame size

MCCB Type	Poles	Conn.	A
S125, VS125	3	FC, RC	91.7
	4	FC, RC	91.7

Panel Cutout

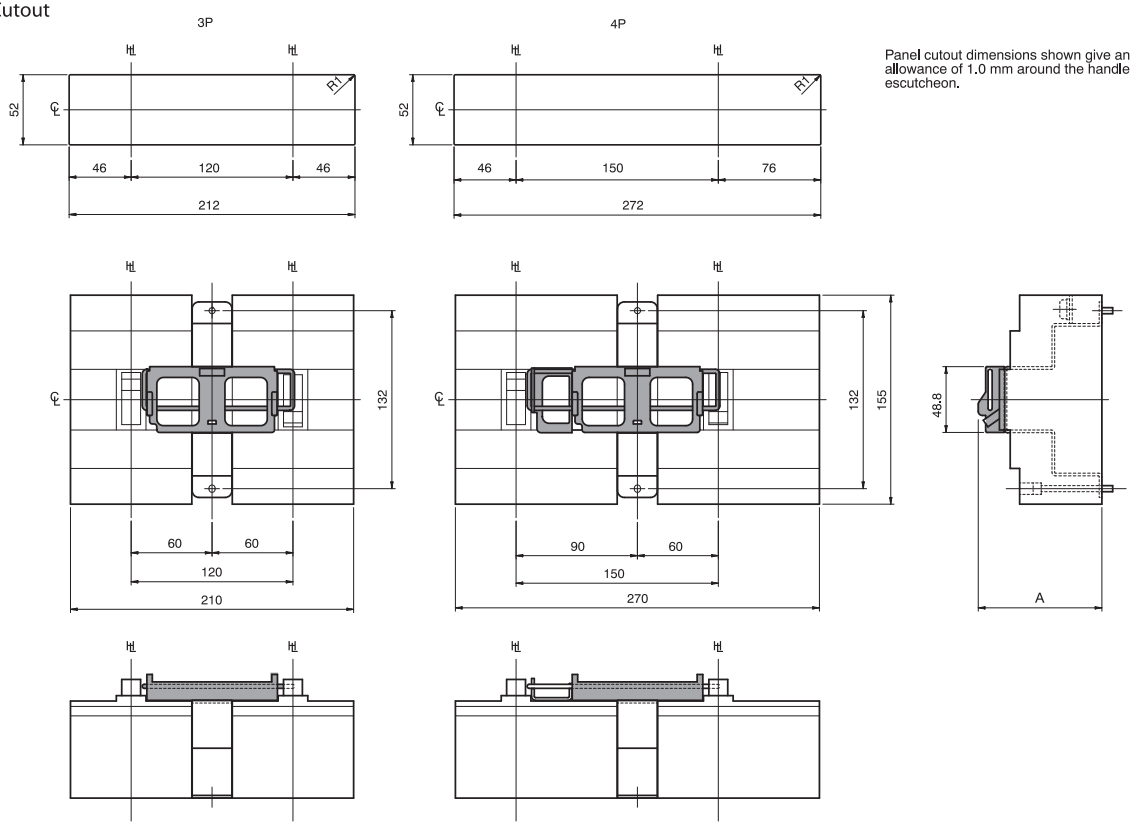

Panel cutout dimensions shown give an allowance of 1.0 mm around the handle escutcheon.

Drilling plan

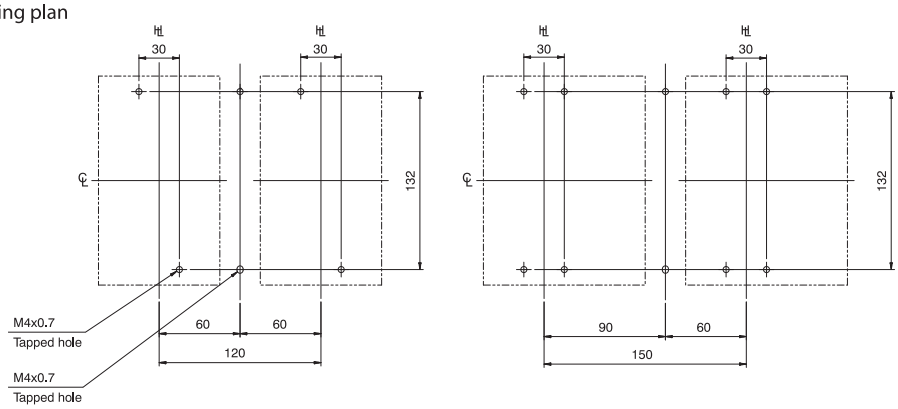

DIMENSIONS

SLIDE INTERLOCKS

Tembreak 2 MCCBs & Switch Disconnectors

ASL: Arrangement Standard Line ℍ: Handle Frame Centre Line ℄: Handle Centre Line

Mechanical Interlocks slide type (MS)
For 125A, 160A frame size

MCCB Type	Poles	Conn.	A
S160, S250-NJ, S250-GJ, S250-NN	3	FC, RC	91.7
	4	FC, RC	
H125, L125, H160, L160, S250-NE, S250-GE, S250-PE, H250, L250	3	FC, RC	126.7
	4	FC, RC	

Panel Cutout

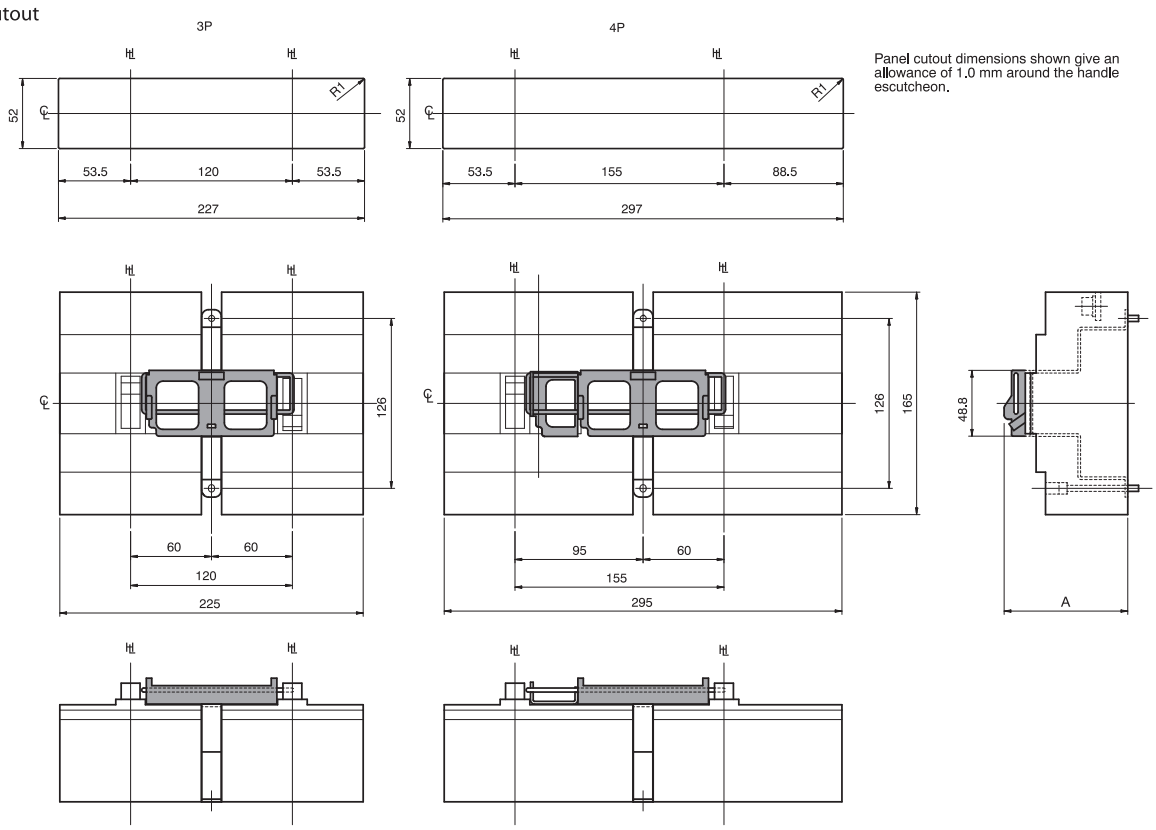

Panel cutout dimensions shown give an allowance of 1.0 mm around the handle escutcheon.

Drilling plan

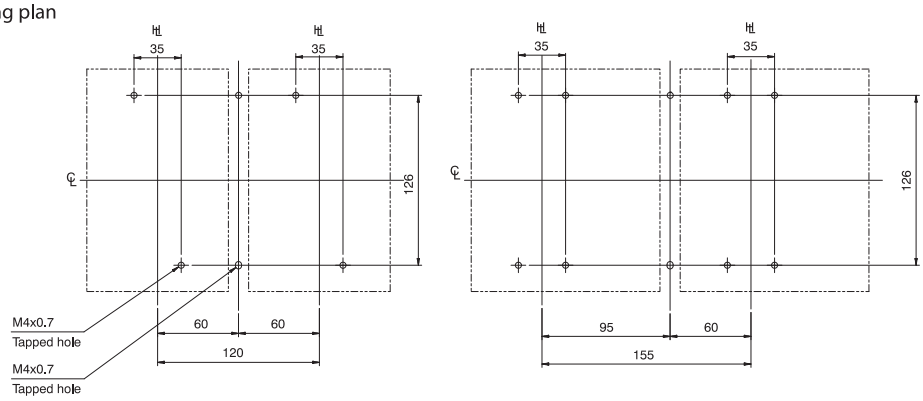

SLIDE INTERLOCKS

Tembreak 2 MCCBs & Switch Disconnectors

ASL: Arrangement Standard Line ℍ: Handle Frame Centre Line ℄: Handle Centre Line

Mechanical Interlock slide type (MS)
For 400A, 630A frame size

MCCB Type	Poles	Conn.	A
E400, S400, E630, S630	3	FC, RC	135.5
	4	FC, RC	
H400, L400	3	FC, RC	172.5
	4	FC, RC	

Panel Cutout

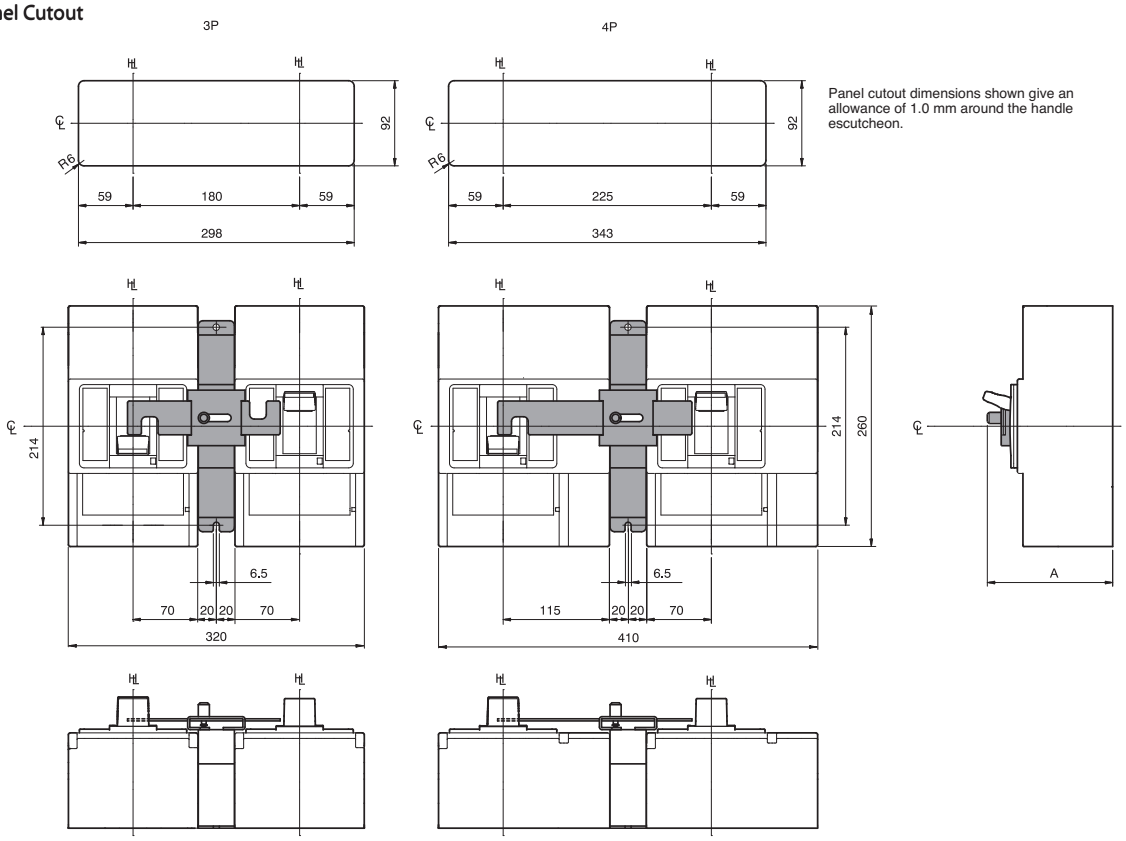

Panel cutout dimensions shown give an allowance of 1.0 mm around the handle escutcheon.

Drilling plan

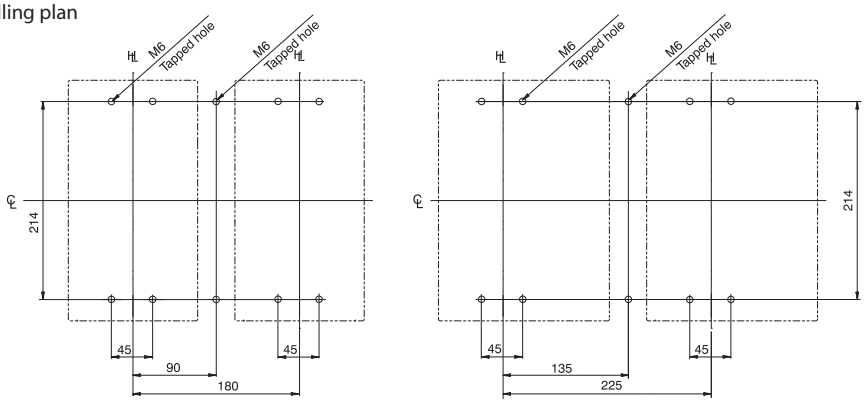

DIMENSIONS

SLIDE INTERLOCKS

Tembreak 2 MCCBs & Switch Disconnectors

ASL: Arrangement Standard Line ℄: Handle Frame Centre Line ℄: Handle Centre Line

Mechanical Interlocks slide type (MS)
For 800A, 1000A frame size

MCCB Type	Poles	Conn.	A
S800, S1000	3	FC, RC	135.5
	4	FC, RC	
H800, L800	3	FC, RC	172.5
	4	FC, RC	

Notes:
(1) The interlock cannot be applied to breakers equipped with front extension bars due to the shortage of the insulating distance.

Panel Cutout

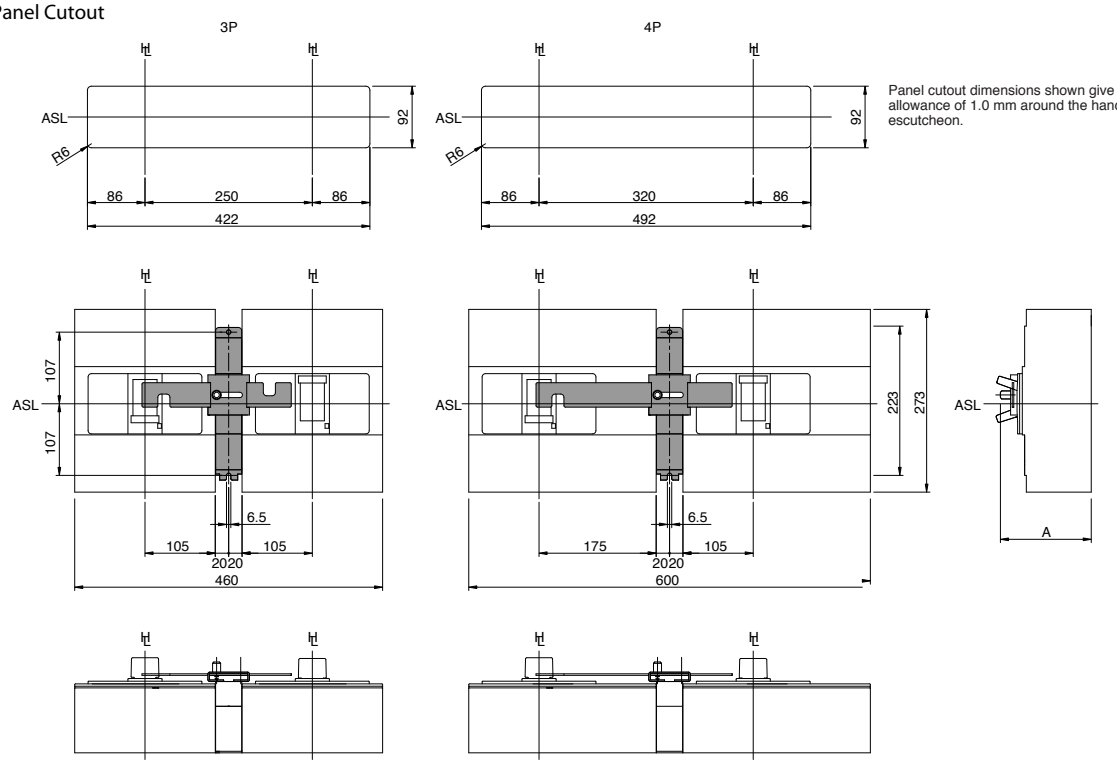

Panel cutout dimensions shown give an allowance of 1.0 mm around the handle escutcheon.

Drilling plan

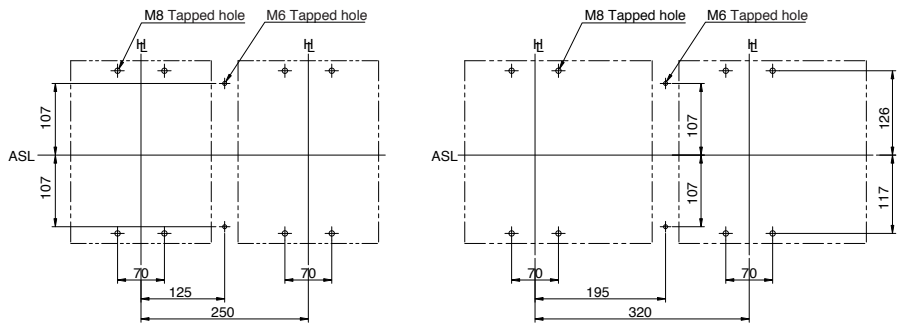

SLIDE INTERLOCKS

Tembreak 2 MCCBs & Switch Disconnectors

ASL: Arrangement Standard Line ℄: Handle Frame Centre Line ℄: Handle Centre Line

MCCB Type	Poles	a	b	c	d	e	f	g	h	k	m	R	R
S1250	3	220	340	135	61.5	343	64	74	138	430	160.5	30	8.5
	4	290	410	135	61.5	413	64	74	138	570	160.5	30	8.5
TL-1250NE	3	220	340	129	61.5	343	58	74	132	430	179.6	30	8.5
	4	290	410	129	61.5	413	58	74	132	570	179.6	30	8.5
S1600	3	220	340	135	61.5	343	64	74	138	430	180.5	30	8.5
	4	290	410	135	61.5	413	64	74	138	570	180.5	30	8.5

Notes:
1 : Please order interlock with breaker.
(1) The interlock cannot be applied to breakers equipped with a terminal block, UVT controller or OCR controller.
(2) See the outline dimensions of the breaker for the drilling plan.

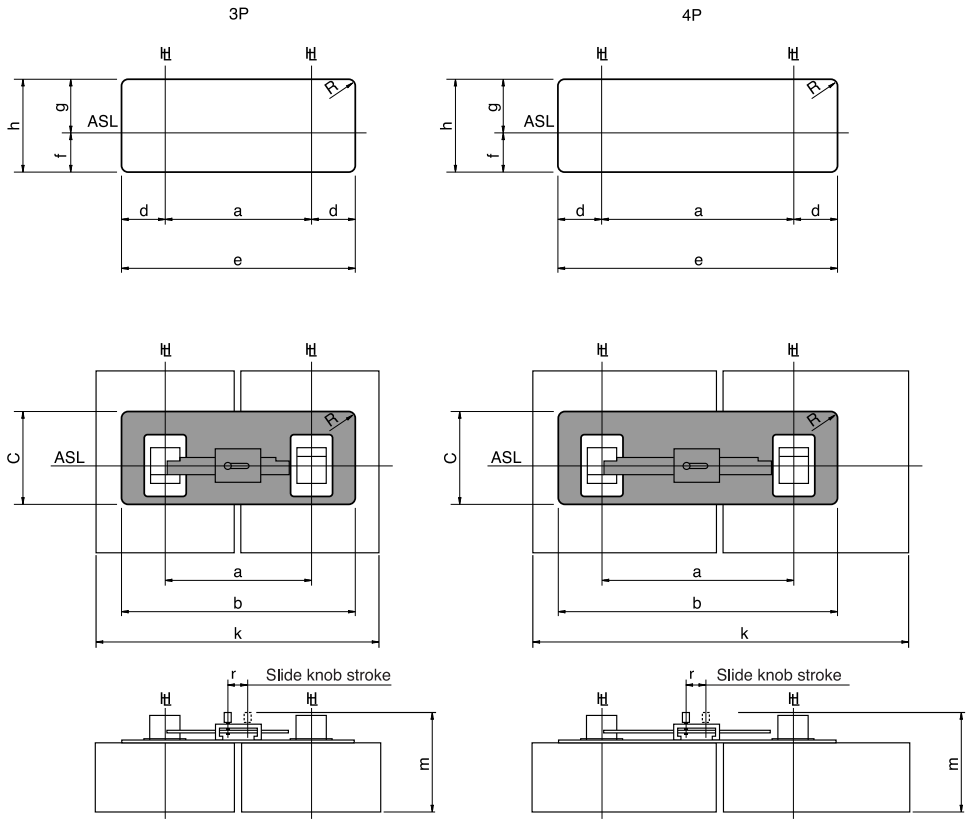

DIMENSIONS

LINK INTERLOCKS

Tembreak 2 MCCBs & Switch Disconnectors

ASL: Arrangement Standard Line ℍ: Handle Frame Centre Line ℄: Handle Centre Line

Mechanical Interlocks link type (ML)
For 125A frame size

MCCB Type	Poles	Position	A
S125	3	Right	81.7
	4		
	3	Left	
	4		

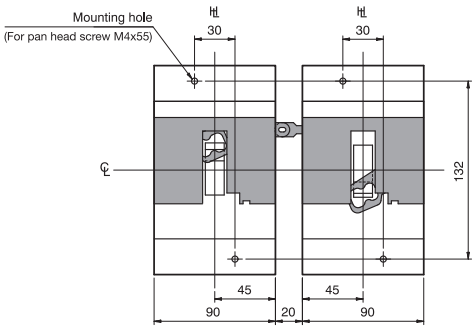

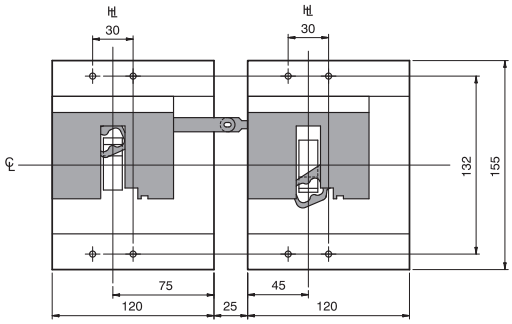

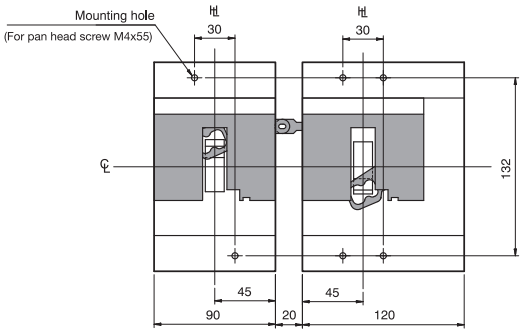

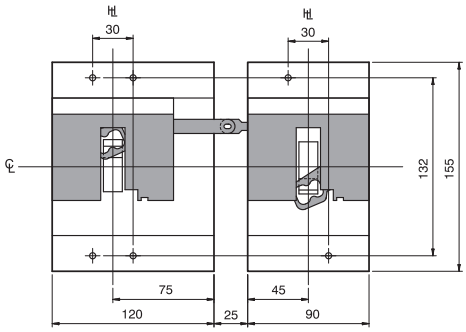

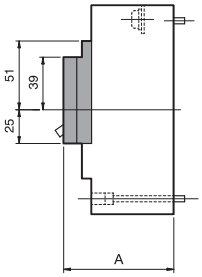

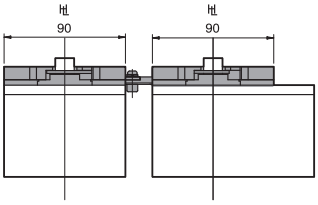

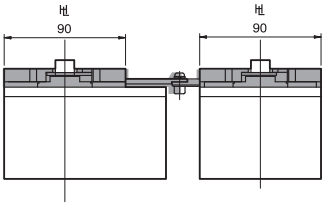

LINK INTERLOCKS

Tembreak 2 MCCBs & Switch Disconnectors

ASL: Arrangement Standard Line ℍ: Handle Frame Centre Line ℄: Handle Centre Line

Mechanical Interlocks link type (ML)
For 125A, 160A, 250A frame size

MCCB Type	Poles	Position	A
S160, S250-NJ, S250-GJ, S250-NN	3	Right	81.7
	4		
	3	Left	
	4		
H125, L125, H160, L160, S250-NE, S250-GE, S250-PE, H250, L250	3	Right	116.7
	4		
	3	Left	
	4		

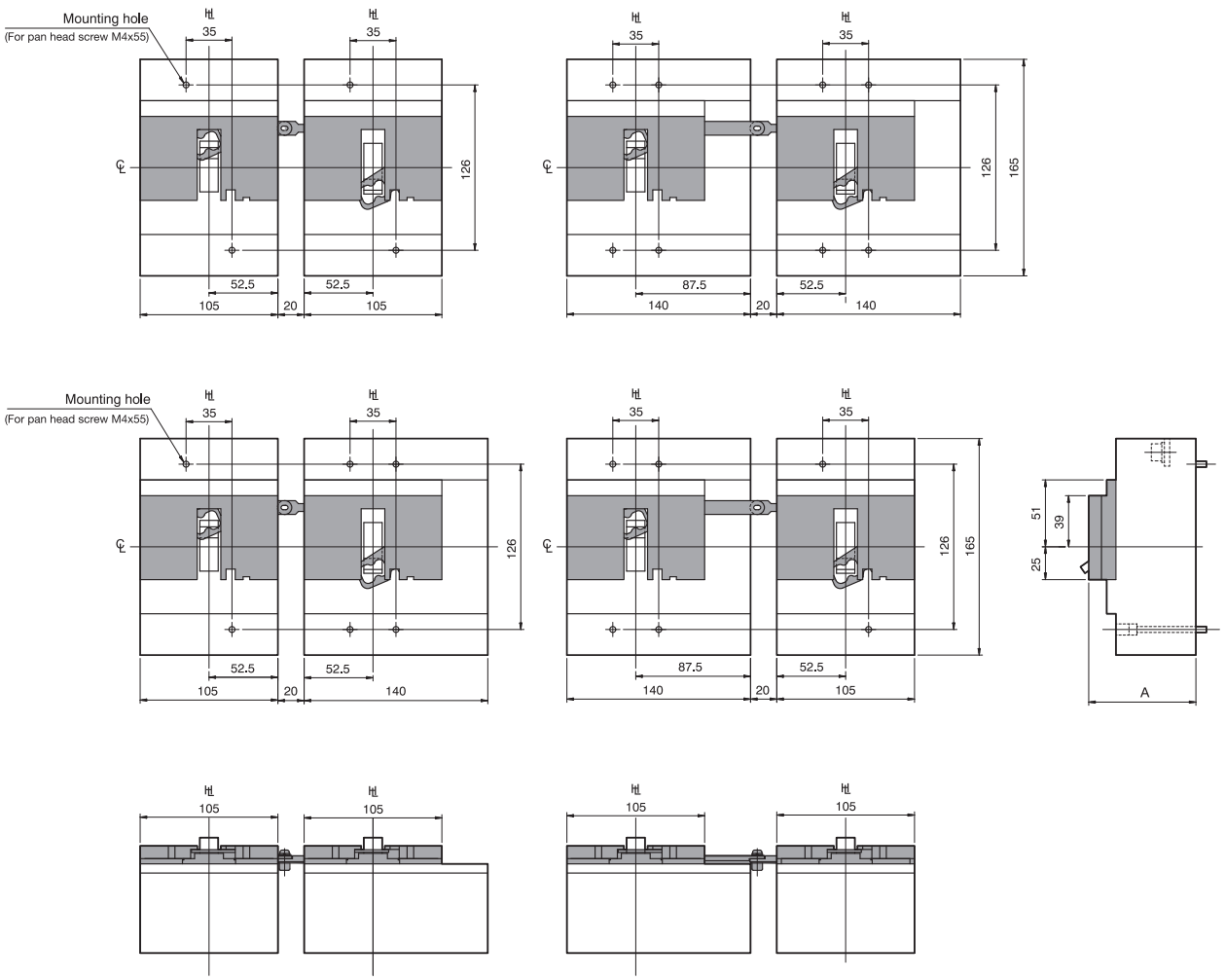

DIMENSIONS

LINK INTERLOCKS WITH MOTOR OPERATORS

Tembreak 2 MCCBs & Switch Disconnectors

ASL: Arrangement Standard Line ℍ: Handle Frame Centre Line ℄: Handle Centre Line

Mechanical Interlocks link type (ML)
For 400A, 630A frame size

MCCB Type	Poles	Position	A
E400, S400 E630, S630	3	Right	213
	4		
	3	Left	
	4		
H400, L400	3	Right	250
	4		
	3	Left	
	4		

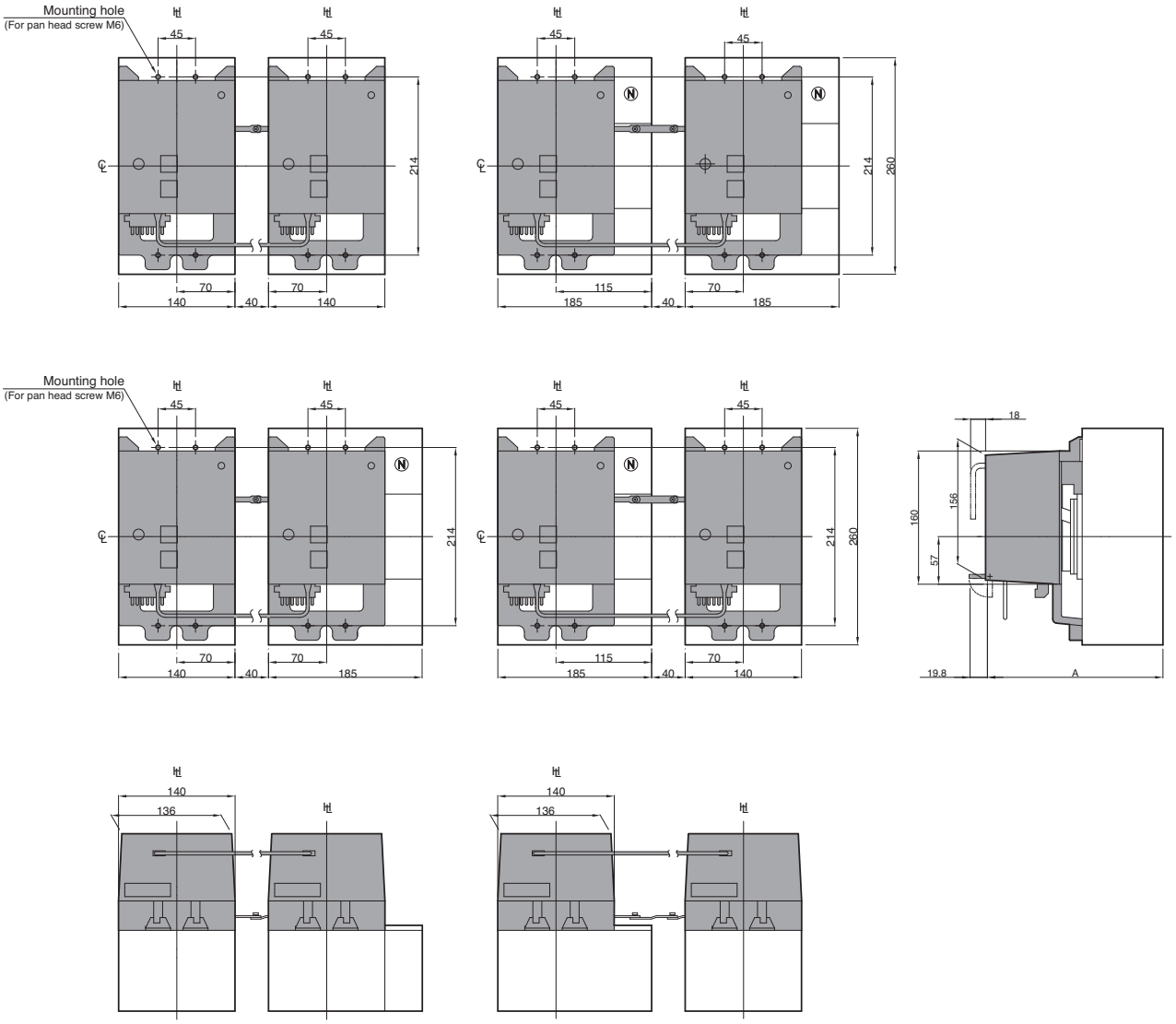

For 400A and 630A frame, the link mechanical interlocks can not be used without motor operators. Please specify also the motor operators when ordering. Furthermore, please request the additional labels for the breakers to TERASAKI and put the labels on the side of the breakers.

LINK INTERLOCKS WITH BREAKER MOUNTED HANDLES

Tembreak 2 MCCBs & Switch Disconnectors

ASL: Arrangement Standard Line ℍ: Handle Frame Centre Line ℄: Handle Centre Line

Mechanical Interlocks link type (ML)
For 400A, 630A frame size

MCCB Type	Poles	Position	A	B
E400, S400 E630, S630	3	Right	200	150±2
	4			
	3	Left		
	4			
H400, L400	3	Right	237	187±2
	4			
	3	Left		
	4			

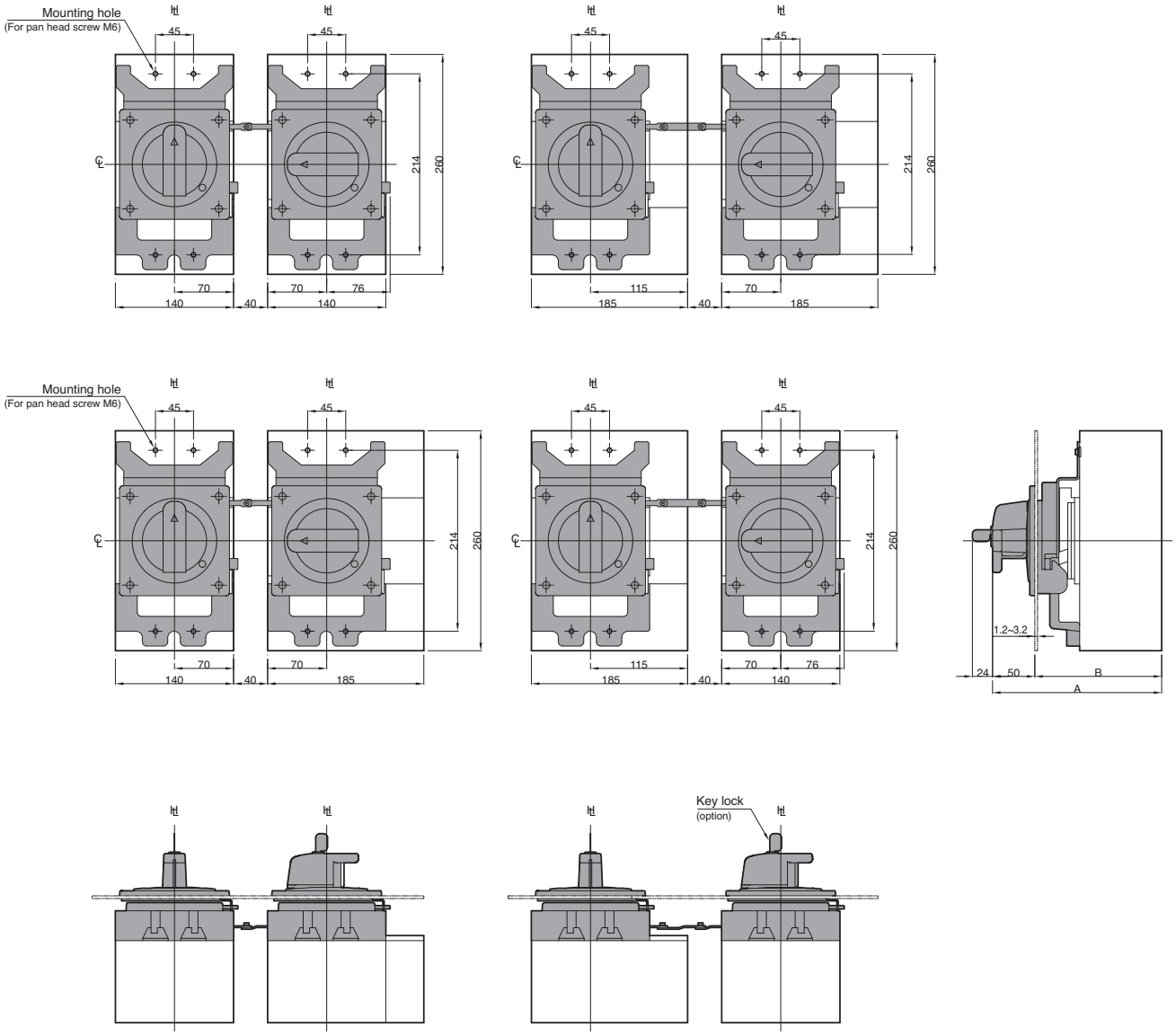

For 400A and 630A frame, the link mechanical interlocks can not be used without breaker mounted handles. Please specify also the breaker mounted handles when ordering. Furthermore, please request the additional labels for the breakers to TERASAKI and put the labels on the side of the breakers.

DIMENSIONS

LINK INTERLOCKS WITH MOTOR OPERATORS

Tembreak 2 MCCBs & Switch Disconnectors

ASL: Arrangement Standard Line ℍ: Handle Frame Centre Line ℄: Handle Centre Line

Mechanical Interlocks link type (ML)
For 800A, 1000A frame size

MCCB Type	Poles	Position	A
S800, S1000	3	Right	213
	4		
	3	Left	
	4		
H800, L800	3	Right	250
	4		
	3	Left	
	4		

Notes:
(1) The interlock cannot be applied to breakers equipped with terminal block.

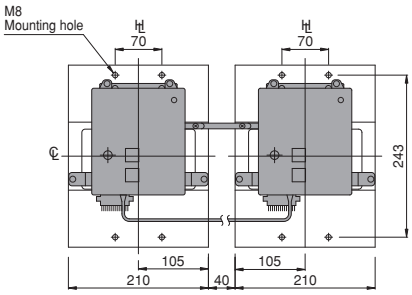

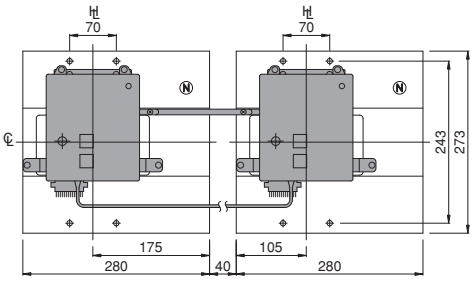

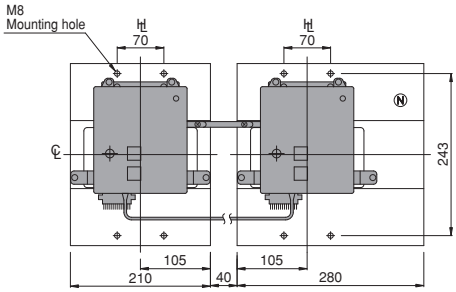

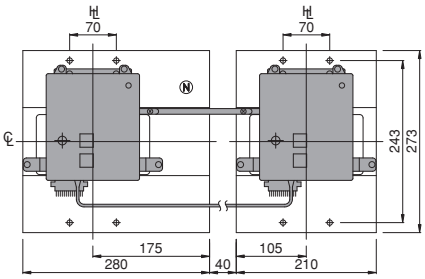

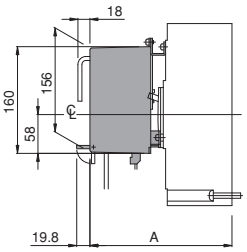

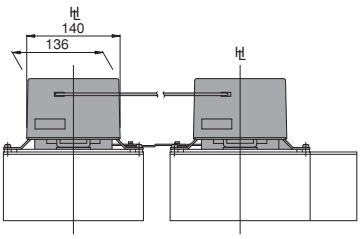

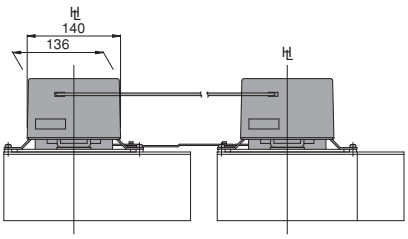

For 800A and 1000A frame, the link mechanical interlocks can not be used without motor operators. Please specify also the motor operators when ordering. Furthermore, please request the additional labels for the breakers to TERASAKI and put the labels on the side of the breakers.

LINK INTERLOCKS WITH BREAKER MOUNTED HANDLES

Tembreak 2 MCCBs & Switch Disconnectors

ASL: Arrangement Standard Line ℍ: Handle Frame Centre Line ℄: Handle Centre Line

Mechanical Interlocks link type (ML)
For 800A, 1000A frame size

MCCB Type	Poles	Position	A	B
S800, S1000	3	Right	200	150
	4			
	3	Left		
	4			
H800, L800	3	Right	237	187
	4			
	3	Left		
	4			

Notes:
(1) The interlock cannot be applied to breakers equipped with terminal block.

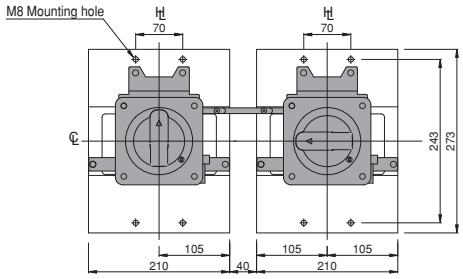

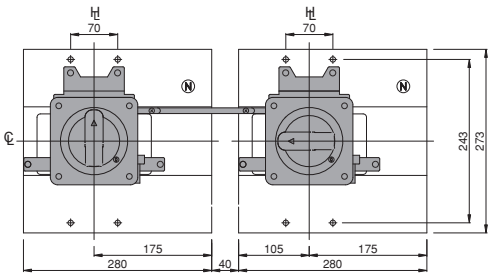

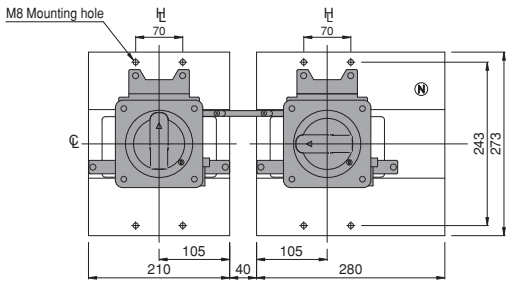

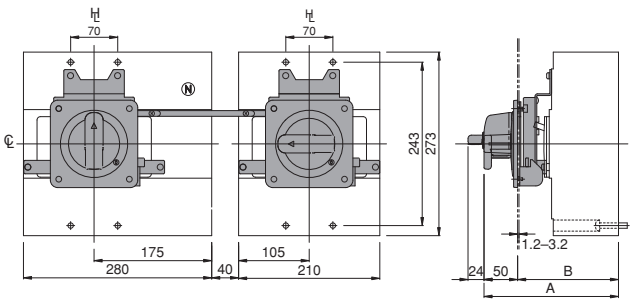

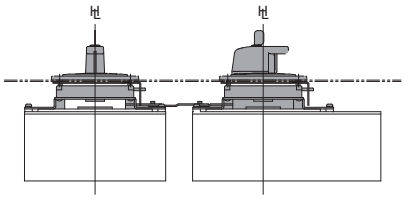

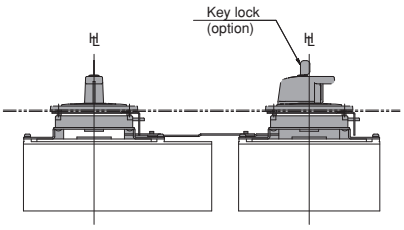

For 800A and 1000A frame, the link mechanical interlocks can not be used without breaker mounted handles. Please specify also the breaker mounted handles when ordering. Furthermore, please request the additional labels for the breakers to TERASAKI and put the labels on the side of the breakers.

DIMENSIONS

WIRE INTERLOCKS

Tembreak 2 MCCBs & Switch Disconnectors

ASL: Arrangement Standard Line ℍ: Handle Frame Centre Line ℄: Handle Centre Line

Mechanical Interlocks wire type (MW)
For 125A frame size

MCCB Type	A
S125	81.7

Cable length	B	C
1.0m	130min. – 480max.	160min. – 480max.
1.5m	130min. – 980max.	160min. – 980max.

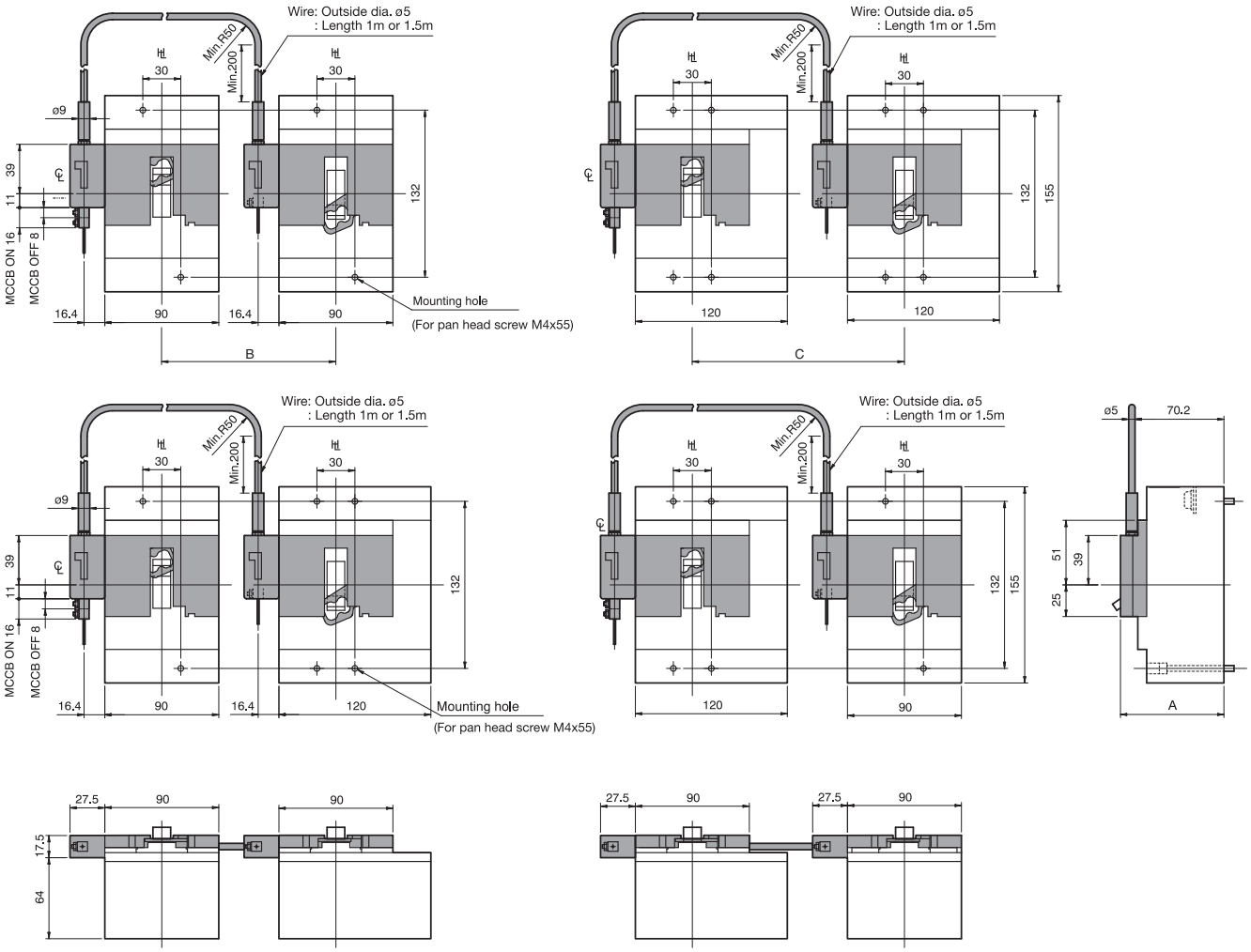

WIRE INTERLOCKS

Tembreak 2 MCCBs & Switch Disconnectors

ASL: Arrangement Standard Line ℍ: Handle Frame Centre Line ℄: Handle Centre Line

Mechanical Interlocks wire type (MW)
For 125A, 160A, 250A frame size

MCCB Type	A	B
S160, S250-NJ S250-GJ, S250-NN	81.7	64
H125, L125, H160, L160, S250-NE, S250-GE, S250-PE, H250, L250	116.7	99

Cable length	C	D
1.0m	155min. – 480max.	180min. – 480max.
1.5m	155min. – 980max.	180min. – 980max.

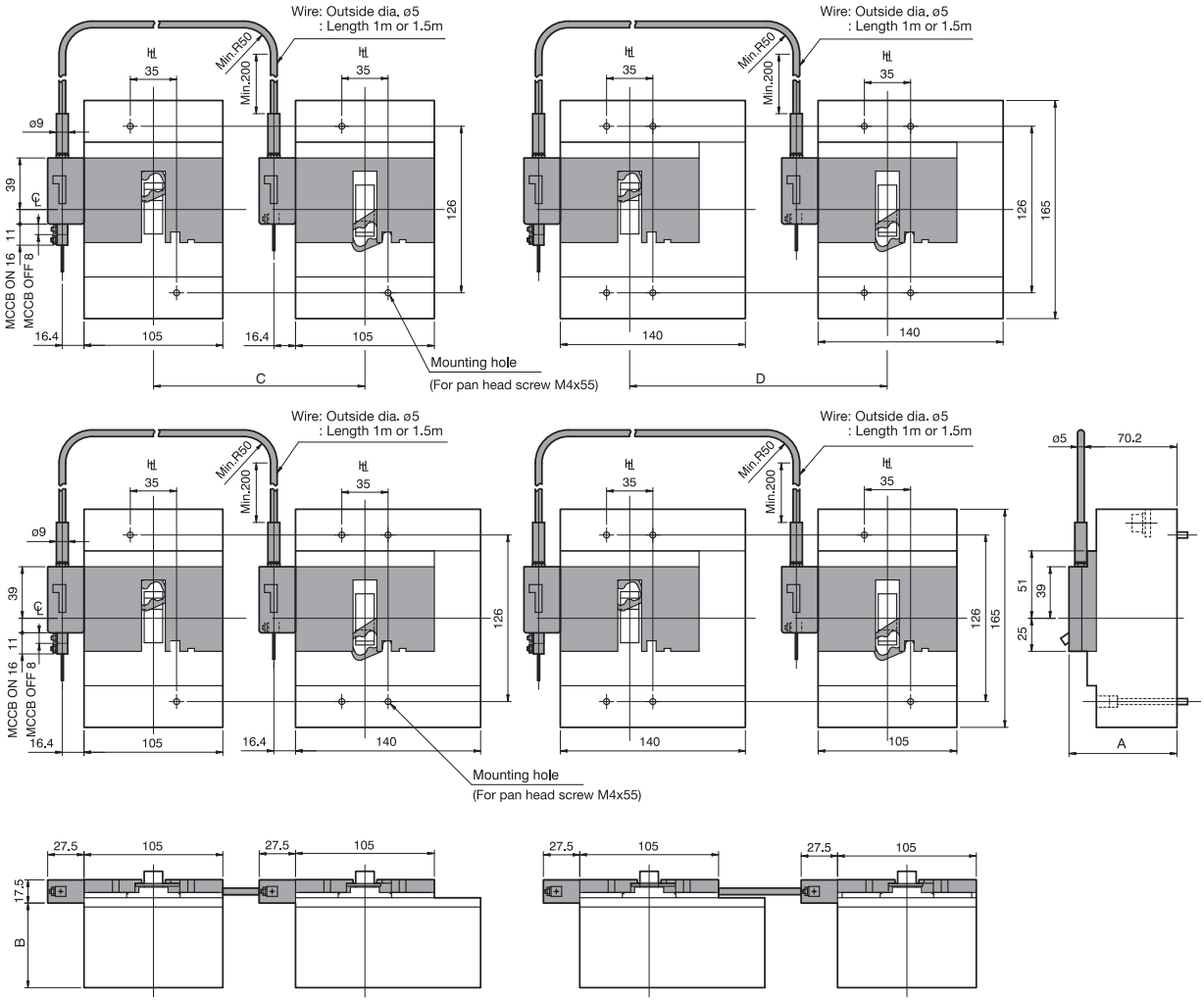

SECTION 6

DIMENSIONS

WIRE INTERLOCKS WITH MOTOR OPERATORS

Tembreak 2 MCCBs & Switch Disconnectors

ASL: Arrangement Standard Line ℍ: Handle Frame Centre Line ℄: Handle Centre Line

Mechanical Interlocks wire type (MW)
For 400A, 630A frame size

MCCB Type	A	B
E400, S400, E630, S630	213	105.4
H400, L400	250	142.4

Cable length	C	D
1.0m	180min. – 480max.	225min. – 480max.
1.5m	180min. – 930max.	225min. – 930max.

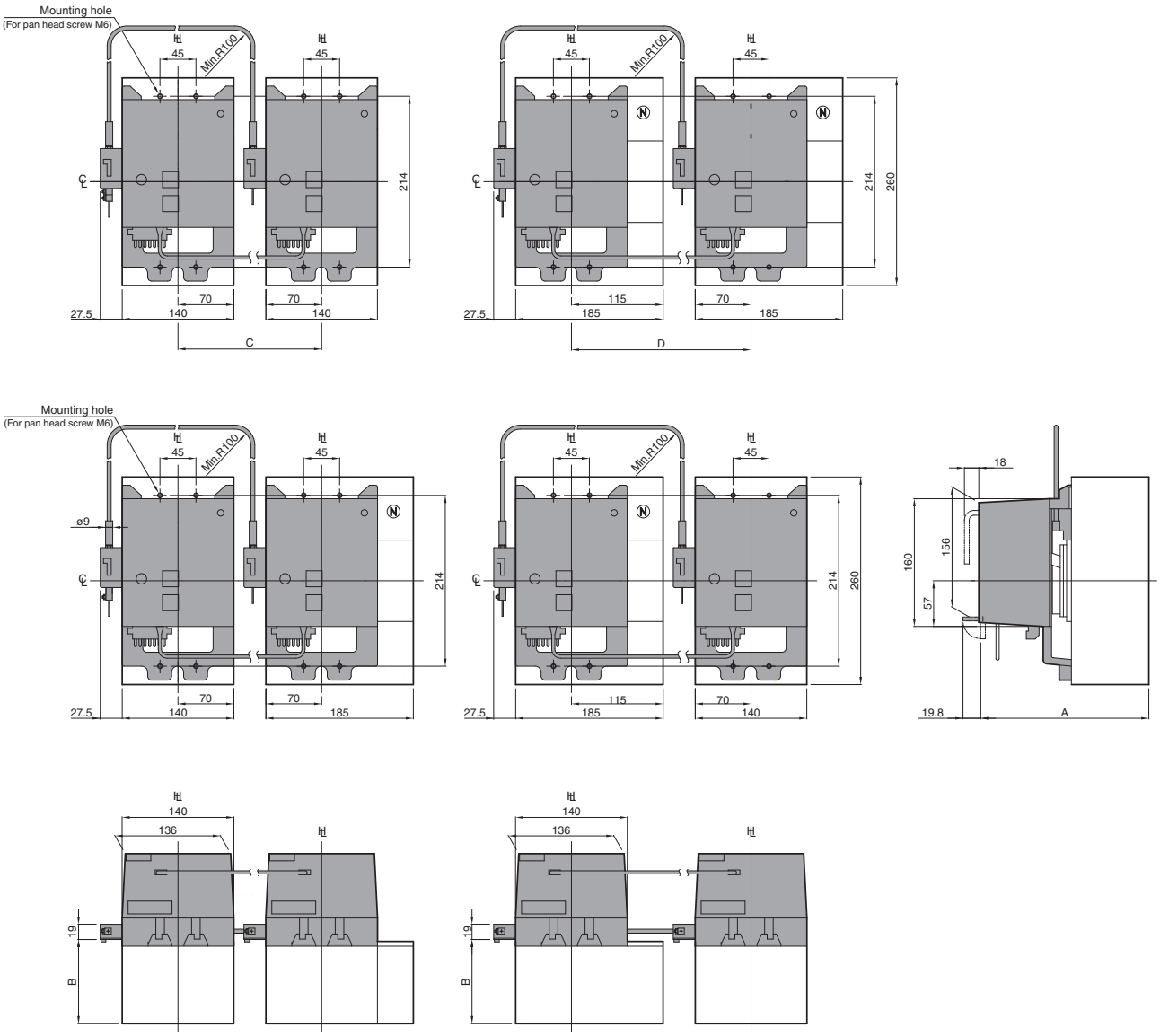

For 400A and 630A frame, the wire mechanical interlocks can not be used without motor operators. Please specify also the motor operators when ordering. Furthermore, please request the additional labels for the breakers to TERASAKI and put the labels on the side of the breakers.

WIRE INTERLOCKS WITH BREAKER MOUNTED HANDLES

Tembreak 2 MCCBs & Switch Disconnectors

ASL: Arrangement Standard Line ℍ: Handle Frame Centre Line ℄: Handle Centre Line

Mechanical Interlocks wire type (MW)
For 400A, 630A frame size

MCCB Type	A	B
E400, S400, E630, S630	200	150±2
H400, L400	237	187±2

Cable length	C	D
1.0m	180min. – 430max.	225min. – 430max.
1.5m	180min. – 930max.	225min. – 930max.

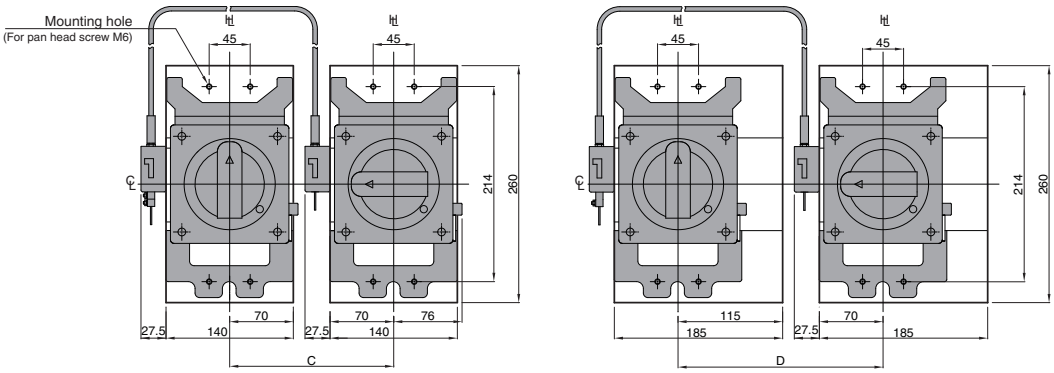

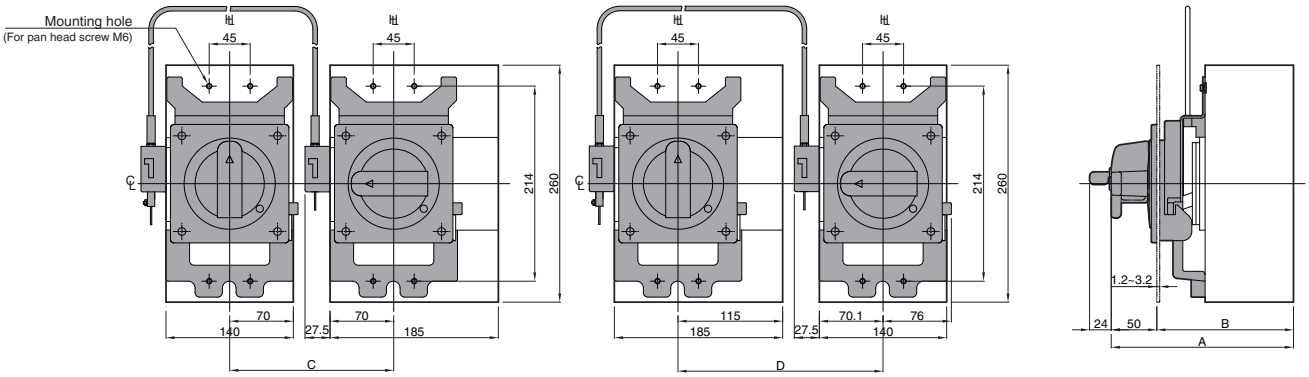

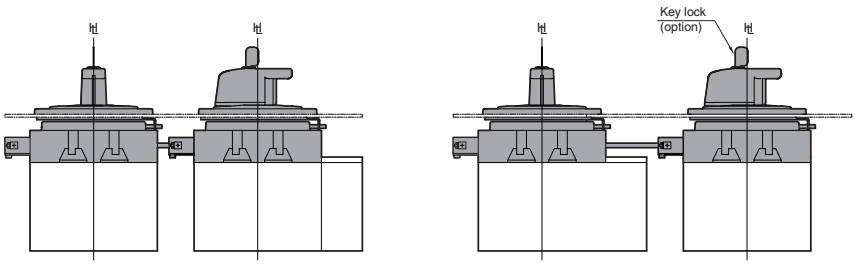

For 400A and 630A frame, the wire mechanical interlocks can not be used without breaker mounted handles. Please specify also the breaker mounted handles when ordering. Furthermore, please request the additional labels for the breakers to TERASAKI and put the labels on the side of the breakers.

DIMENSIONS

WIRE INTERLOCKS WITH MOTOR OPERATORS

Tembreak 2 MCCBs & Switch Disconnectors

ASL: Arrangement Standard Line ⊬: Handle Frame Centre Line ℄: Handle Centre Line

Mechanical Interlocks wire type (MW)
For 800A, 100A frame size

MCCB Type	A
S800, S1000	213
H800, L800	250

Cable length	C	D
1.0m	250min. – 430max.	320min. – 430max.
1.5m	250min. – 930max.	320min. – 930max.

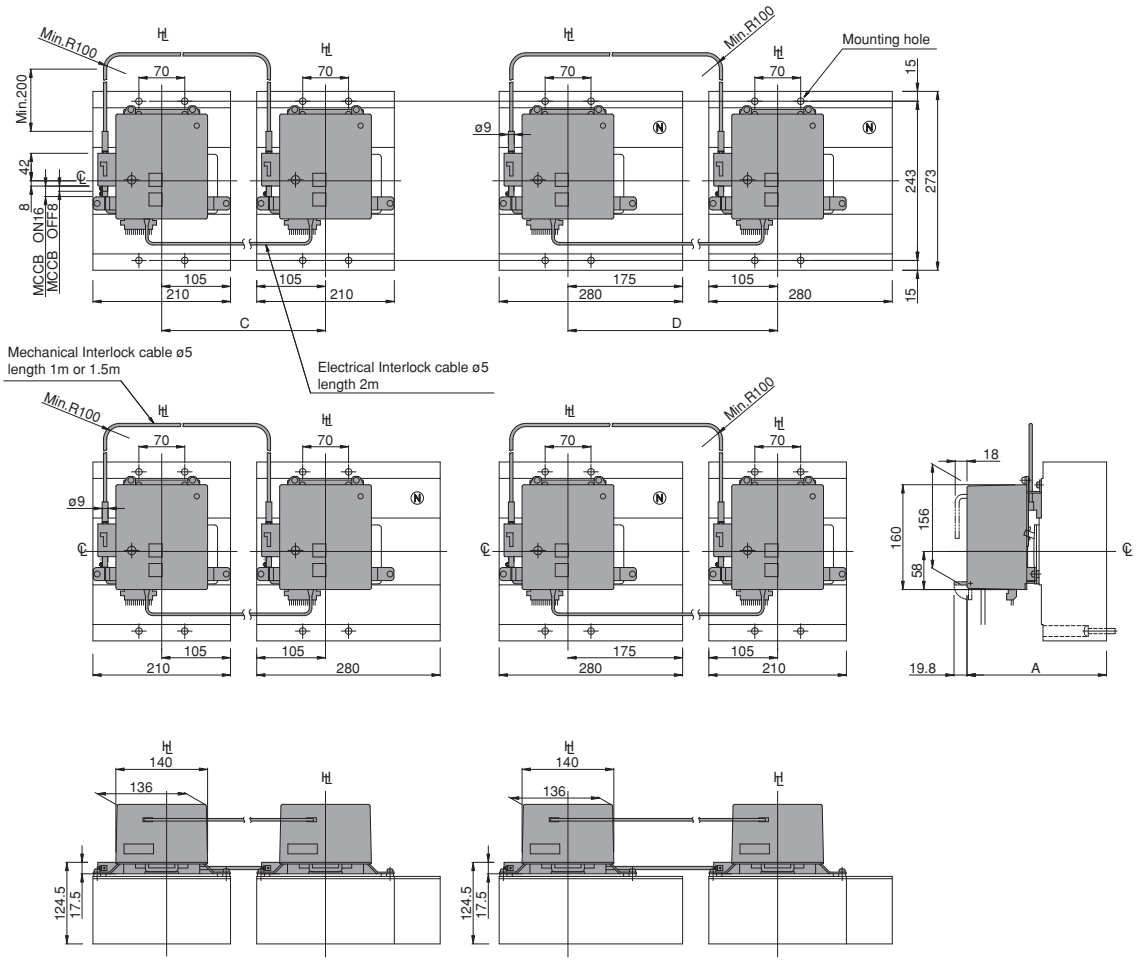

For 800A and 1000A frame, the wire mechanical interlocks can not be used without motor operators. Please specify also the motor operators when ordering. Furthermore, please request the additional labels for the breakers to TERASAKI and put the labels on the side of the breakers.

WIRE INTERLOCKS WITH BREAKER MOUNTED HANDLES

Tembreak 2 MCCBs & Switch Disconnectors

ASL: Arrangement Standard Line ℍ: Handle Frame Centre Line ℄: Handle Centre Line

Mechanical Interlocks wire type (MW)
For 800A, 100A frame size

MCCB Type	A	B
S800, S1000	200	150±2
H800, L800	237	187±2

Cable length	C	D
1.0m	250min. – 430max.	320min. – 430max.
1.5m	250min. – 930max.	320min. – 930max.

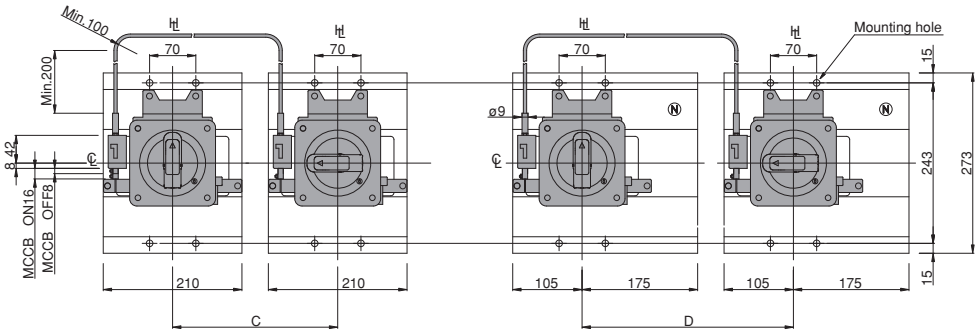

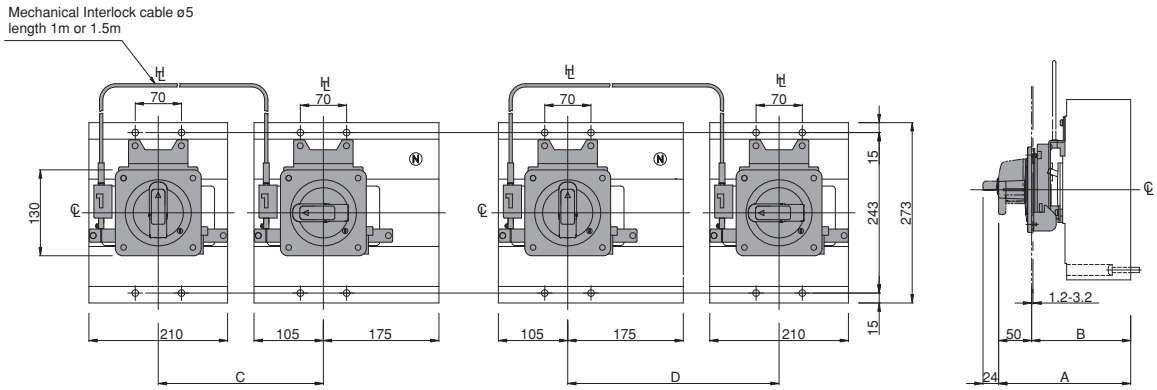

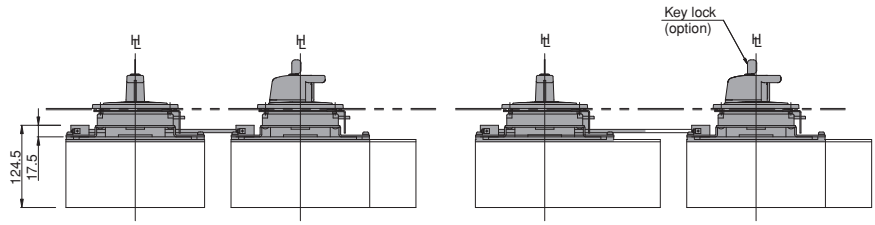

For 800A and 1000A frame, the wire mechanical interlocks can not be used without breaker mounted handles. Please specify also the breaker mounted handles when ordering. Furthermore, please request the additional labels for the breakers to TERASAKI and put the labels on the side of the breakers.

DIMENSIONS

WIRE INTERLOCKS REAR TYPE

Tembreak 2 MCCBs & Switch Disconnectors

ASL: Arrangement Standard Line ℄: Handle Frame Centre Line ℄: Handle Centre Line

Mechanical Interlocks wire type (MW)
For 1250A, 1600A frame size

MCCB Type	A
S1250	120
S1600	140

Cable length	P	L
1.0m	650–500–350	450–500–530 ±30
1.5m	1000–900–750	550–600–700 ±30

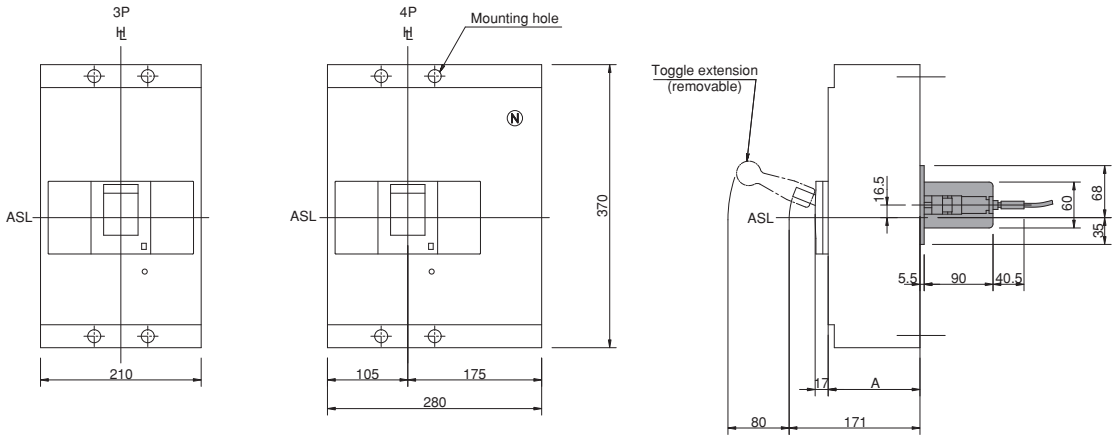

Vertical installation

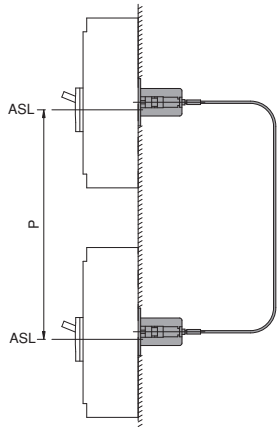

Drilling plan (front view)

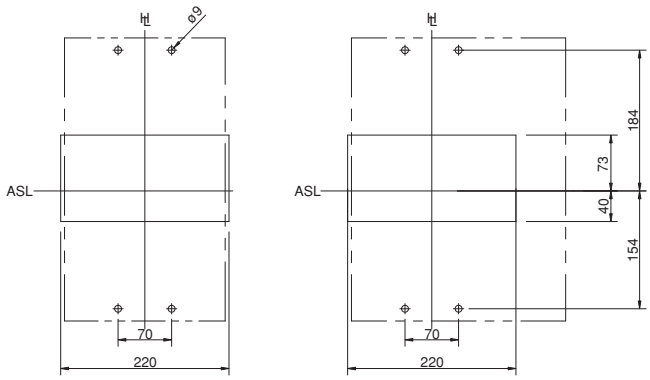

Horizontal installation

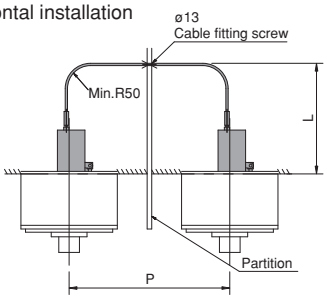

POSITION OF TRIP BUTTON

Tembreak 2 MCCBs & Switch Disconnectors

ASL: Arrangement Standard Line ⊬: Handle Frame Centre Line ℄: Handle Centre Line

Positions of Trip Button

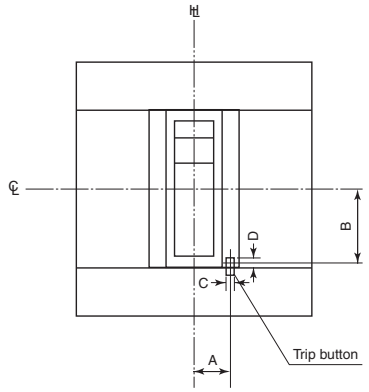

MCCB Type	Poles	A	B	C	D
S125	3, 4	13.8	20.4	3.3	4.3
S160 S250-NJ, S250-GJ, S250-NN,	3, 4	17.2	20.4	3.3	4.3
H125, L125, H160, L160, S250-NE, S250-GE, S250-PE, H250, L250	3, 4	17.2	20.4	3.3	4.3
E400, S400 H400, L400, E630, S630	3, 4	21.6	37.2	5.3	6.6
S800, S1000 H800, L800	3, 4	21.6	33	5.3	6.6

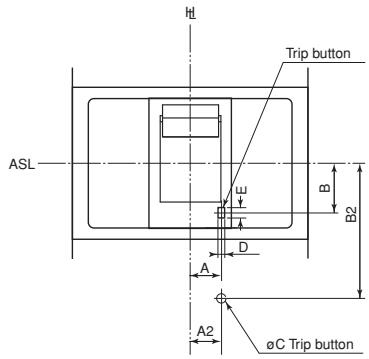

MCCB Type	Poles	A	B	A2	B2	C	D	E
S1250 S1600	3, 4	30	37.5	31	70.5	6	6	8

ASL: Arrangement Standard Line ⊬: Handle Frame Centre Line ℄: Handle Centre Line

External Neutral CT

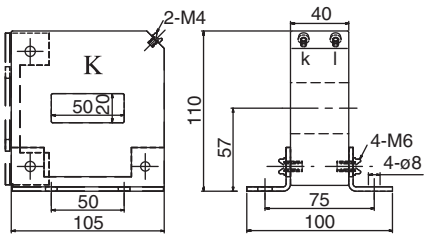

Type of CT	Rated primary current (A)	Rated secondary current (mA)
T2GB40N04	400	100
T2GB40N06	630	100
T2GB40N08	800	100

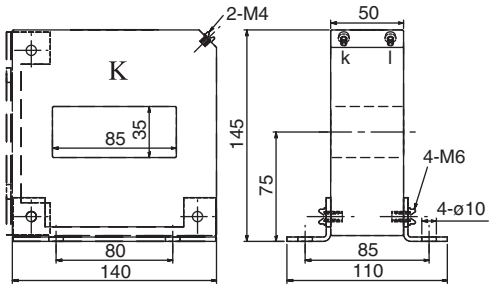

Type of CT	Rated primary current (A)	Rated secondary current (mA)
T2GBX6N10	1000	100
T2GBX6N12	1250	100
T2GBX6N16	1600	100

DIMENSIONS

DOOR FLANGES

Tembreak 2 MCCBs & Switch Disconnectors

ASL: Arrangement Standard Line ℍ: Handle Frame Centre Line ℄: Handle Centre Line

Door Flange for Toggle-operated MCCB Tembreak 2 Lite MCCB

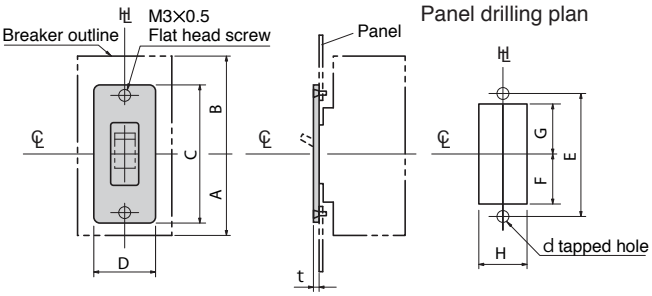

Dimensions mm

Types of breakers	A	B	C	D	E	F		G		H		d	t
						Min	Max	Min	Max	Min	Max		
E160-SF, S160-SCF, S160-SF, E160-SJ S160-SCJ, S160-SJ, S160-SN	65	65	105	50	92	37	42	37	42	32	45	M3 × 0.5	2
E250-SF, E250-SCF, S250-SF, E250-SJ E250-SCJ, S250-SJ, S250-SN	82.5	82.5	105	50	92	37	42	37	42	32	45	M3 × 0.5	2

Door Flange for Toggle-operated MCCBs (mm) Tembreak 2 MCCB

MCCB Type	Fig.	A	B	C	D	E	F		G		H		K	d	t
							Min	Max	Min	Max	Min	Max			
S125	1 1	77.5	77.5	105	50	92	37	42	37	42	32	45	—	M3×0.5	2
H125, L125, H160, L160, S250-NE, S250-GE, S250-PE, H250, L250	1 1	82.5	82.5	105	50	92	37	42	37	42	32	45	—	M3×0.5	2
S160, S250-NJ, S250-GJ, S250-NN	1 1	82.5	82.5	105	50	92	37	42	37	42	32	45	—	M3×0.5	2
E400, S400, E630, S630	2 1	130	130	135	95	120	48	56	48	56	57	90	80	M3×0.5	2
H400, L400	2 1	130	130	135	95	120	48	56	48	56	57	90	80	M3×0.5	2
S800, S1000	2 2	132	141	135	95	120	48	56	48	56	57	90	80	M3×0.5	2
H800, L800	2 2	132	141	135	95	120	48	56	48	56	57	90	80	M3×0.5	2
S1250	2 2	170	200	150	120	135	51	63.5	51	63.5	85	115	80	M3×0.5	2
S1600	2 2	170	200	150	120	135	51	63.5	51	63.5	85	115	80	M3×0.5	2

Notes:
1 : ℄ Handle centre line is applied.
2 : ASL Arrangement standard line is applied.

Door flanges are recommended to be used to cover the cutout of a switchboard panel.

Fig. 1

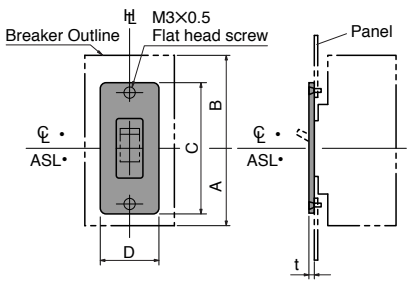

Fig. 2

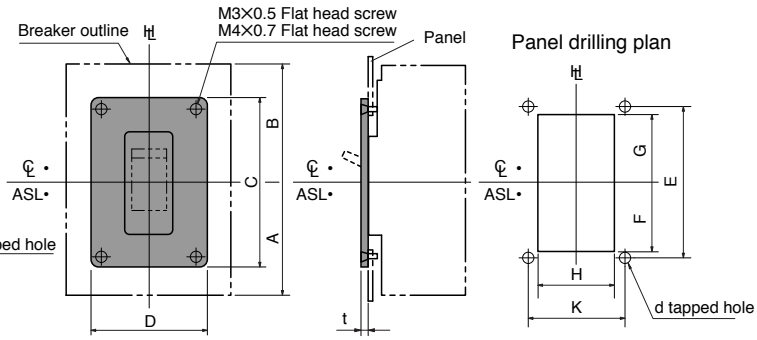

SHROUDED NEUTRAL LINK

Tembreak 2 MCCBs & Switch Disconnectors

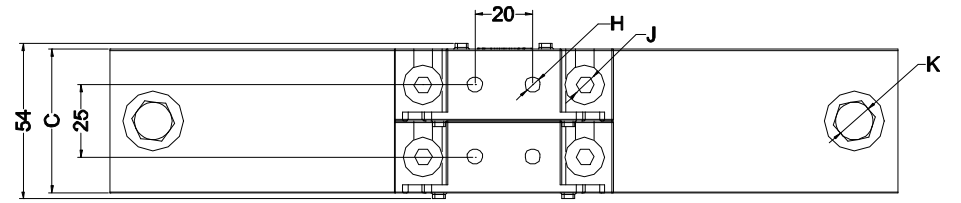

EXAMPLE UNDERSIDE VIEW
(800A,1000A)

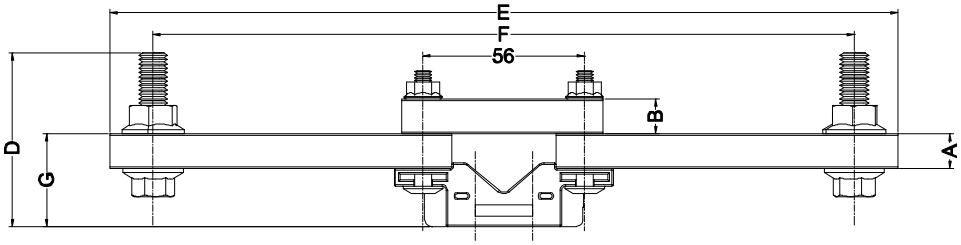

EXAMPLE OF TWIN BASE NEUTRAL
LINK ASSEMBLIES
(800A, 1000A)

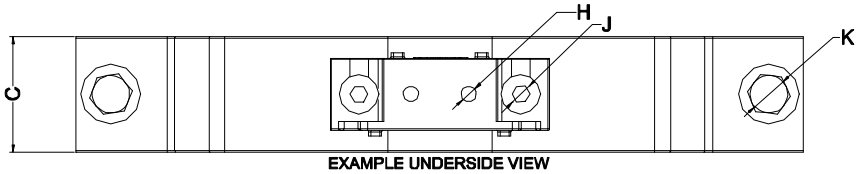

EXAMPLE UNDERSIDE VIEW
(400A, 630A)

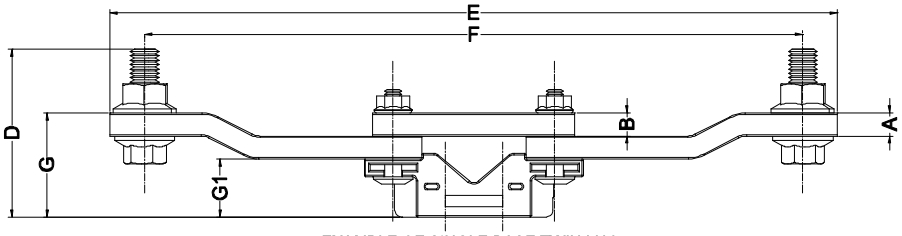

EXAMPLE OF SINGLE BASE TWIN LUG
NEUTRAL LINK ASSEMBLIES
(400A, 630A)

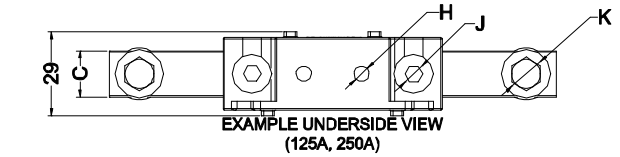

EXAMPLE UNDERSIDE VIEW
(125A, 250A)

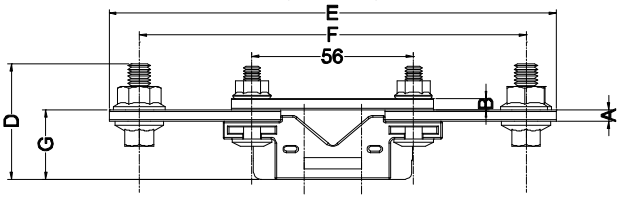

EXAMPLE OF SINGLE BASE NEUTRAL LINK
ASSEMBLIES
(125A, 250A)

DIMENSIONS

SHROUDED NEUTRAL LINK

Tembreak 2 MCCBs & Switch Disconnectors

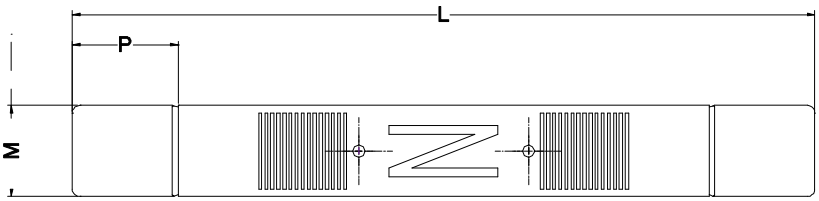

EXAMPLE PLAN VIEW

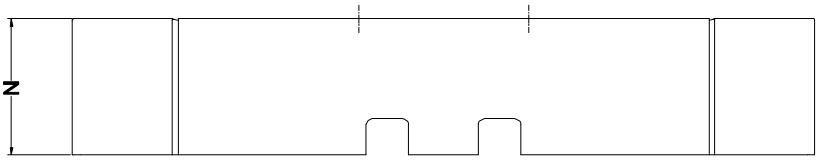

EXAMPLE SIDE VIEW

	A	B	C	D	E	F	G (G1)	H	J	K
TNL125	4	4	16	40	155	134	24	M5	M6	M8x20
TNL250	4	4	20	40	165	144	24	M5	M6	M8x20
TNL400	6	8	30	60	252	228	36(20)	M5	M6	M10x25
TNL630	8	8	40	60	252	228	36 (20)	M5	M6	M10x25
TNL800	12	12	40	55	273	243	32	M5	M6	M10x40
TNL1000	12	12	50	60	273	243	32	M5	M6	M10x40

SHROUD	L	M	N	P
TNL250CV	245	30	45	35
TNL630CV	TBC			
TNL1000CV	TBC			

CONTENTS

TEMBREAK 2 & TEMBREAK

MCCBs FROM 12A TO 3200A • MCCBs FOR 1000V AC
MCCBs FOR 1000V DC • MCCBs WITH INTEGRAL RCD
SWITCH DISCONNECTORS • MEASUREMENT AND DATA COMMUNICATION

RATINGS AND SPECIFICATIONS	SECTION 1
PROTECTION CHARACTERISTICS	SECTION 2
APPLICATION DATA	SECTION 3
ACCESSORIES	SECTION 4
INSTALLATION	SECTION 5
DIMENSIONS	SECTION 6
ORDER CODES	SECTION 7

ORDER CODES

Frame Reference	TB2 Lite 160	TB2 Lite 250	TB2 S125	TB2 S250	TB2 S/H/L 250	TB2 H/L 400	TB2 E/S 630
Max. In (A) of Frame	160	250	125	250	250	400	630
TEMBREAK 2 MOULDED CASE CIRCUIT BREAKERS			S125-NJ S125-GJ	S160-NJ S160-GJ S250-NJ S250-GJ	H125-NJ L125-NJ H160-NJ L160-NJ H250-NJ L250-NJ S250-NE S250-GE S250-PE H250-NE	H400-NE L400-NE	E400-NJ S400-CJ S400-NJ S400-GJ S400-PJ S400-NE S400-GE S400-PE S630-CE E630-NE S630-GE
TEMBREAK 2 CIRCUIT BREAKERS WITH Icu = 70KA AT 690V Ac					L125-PJ	L400-PE	
TEMBREAK 2 CIRCUIT BREAKERS FOR 1000V Ac			VS125-NJ	VS250-NJ			XV400NE①
TEMBREAK 2 LITE SPACE SAVING, MONEY SAVING MOULDED CASE CIRCUIT BREAKERS	E160-SF S160-SCF S160-SF E160-SJ S160-SCJ S160-SJ	E250-SCF E250-SF S250-SF E250-SCJ E250-SJ S250-SJ					
TEMBREAK 2 CIRCUIT BREAKERS WITH INTEGRAL RESIDUAL CURRENT PROTECTION (CBR)			ZE125-NJ ZS125-NJ ZS125-GJ	ZE250-NJ ZS250-NJ ZS250-GJ			
CIRCUIT BREAKERS AND SWITCH-DISCONNECTORS FOR USE ABOVE 250V DC	S160-SD S160-GD S160-SDN	S250-SD S250-GD S250-SDN		PVS160-SDL PVS160-SDH PVS160-SNL PVS160-SNH PVS250-SDL PVS250-SDH PVS250-SNL PVS250-SNH		PVS400-NDL PVS400-NDH PVS400-NNL PVS400-NNH	S400-ND
SWITCH DISCONNECTORS	S160-SN	S250-SN	S125-NN	S250-NN			S400-NN
	TemBreak2 Lite 160A Frame Pages 325 - 334	TemBreak2 Lite 250A Frame Pages 335 - 344	TemBreak2 E/S 125A Frame Pages 345 - 356	TemBreak2 E/S 250A & H/L 250A Frame Pages 357 - 377		TemBreak2 H/L 400A & E/S 630A Frame Pages 378 - 399	

	TB2 H/L 800	TB2 1000	TB2 1250 (*TB1 1250	TB2 1600 (*TB1 1600)	TB 2000
	800	1000	1250	1600	32000
	H800-NE L800-NE	S800-CJ S800-NJ S800-RJ S800-NE S800-RE S1000-SE S1000-NE	S1250-SE S1250-NE S1250-GE	S1600-NE S1600-SE	XS2000-NE① XS2500-NE① XS32000-NE①
	L800-PE				
		XV630PE① XV800PE①	XV1250NE①		
	PVS800-NDL PVS800-NDH PVS800-NNL PVS800-NNH	S800-ND S1000-ND	XS1250ND①	XS1600ND①	XS2000-ND* XS2500-ND① XS3200-ND①
		S800-NN	S1250-NN	S1600-NN	XS2000-NN① XS2500-NN①
	TemBreak2 H/L 800A & 1000A Frame Pages 400 - 416		TemBreak2 1250A & 1600A Frame Pages 417 - 430		TemBreak2 2000A, 2500A & 3200A Frame Pages 431 - 432

ORDER CODES

TB2 LITE 160 FRAME

1P Fixed thermal and fixed magnetic MCCBs and Accessories

Model	I_n (A)	1P	
E160-SF *I*cu = 25 kA @ 400V AC Front Connection (FC)	16	4547560	595004
	20	4547560	595011
	25	4547560	595028
	32	4547560	595035
	40	4547560	595042
	50	4547560	595059
	63	4547560	595066
	80	4547560	595073
	100	4547560	595080
	125	4547560	595097

Model	I_n (A)	1P	
E160-SF *I*cu = 25 kA @ 400V AC Cable clamps (FW)	16	4547560	591761
	20	4547560	591778
	25	4547560	591785
	32	4547560	591792
	40	4547560	591808
	50	4547560	591815
	63	4547560	591822
	80	4547560	591839
	100	4547560	591846
	125	4547560	591853

Terminal Cover

Field Fit Accessory	1P	
1P, 1 cover long	4547560	065224

TB2 LITE 160 FRAME

Adjustable thermal and fixed magnetic MCCBs with Front Connections

Model	I_R (A)	3P		4P	
E160-SJ *I*cu = 16kA @ 400V AC Front Connection (FC)	16 - 25	4547560	596360	4547560	596438
	25 - 40	4547560	596377	4547560	596445
	40 - 63	4547560	596384	4547560	596452
	50 - 80	4547560	596391	4547560	596469
	63 - 100	4547560	596407	4547560	596476
	80 - 125	4547560	596414	4547560	596483
	100 - 160	4547560	596421	4547560	596490

Model	I_R (A)	3P		4P	
S160-SCJ *I*cu = 25kA @ 400V AC Front Connection (FC)	16 - 25	4547560	596575	4547560	596711
	25 - 40	4547560	596582	4547560	596728
	40 - 63	4547560	596599	4547560	596735
	50 - 80	4547560	596605	4547560	596742
	63 - 100	4547560	596612	4547560	596759
	80 - 125	4547560	596629	4547560	596766
	100 - 160	4547560	596636	4547560	596773

Model	I_R (A)	3P		4P	
S160-SJ *I*cu = 40kA @ 400V AC Front Connection (FC)	16 - 25	4547560	596858	4547560	596995
	25 - 40	4547560	596865	4547560	597008
	40 - 63	4547560	596872	4547560	597015
	50 - 80	4547560	596889	4547560	597022
	63 - 100	4547560	596896	4547560	597039
	80 - 125	4547560	596902	4547560	597046
	100 - 160	4547560	596919	4547560	597053

ORDER CODES

TB2 LITE 160 FRAME

Fixed thermal and fixed magnetic MCCB with Front Connections

Model	I_n (A)	3P		4P	
E160-SF *I*cu = 16kA @ 400V AC Front Connection (FC)	16	4547560	595103	4547560	595219
	20	4547560	595110	4547560	595226
	25	4547560	595127	4547560	595233
	32	4547560	595134	4547560	595240
	40	4547560	595141	4547560	595257
	50	4547560	595158	4547560	595264
	63	4547560	595165	4547560	595271
	80	4547560	595172	4547560	595288
	100	4547560	595189	4547560	595295
	125	4547560	595196	4547560	595301
	160	4547560	595202	4547560	595318

Model	I_n (A)	3P		4P	
S160-SCF *I*cu = 25kA @ 400V AC Front Connection (FC)	16	4547560	595325	4547560	595431
	20	4547560	595332	4547560	595448
	25	4547560	595349	4547560	595455
	32	4547560	595356	4547560	595462
	40	4547560	595363	4547560	595479
	50	4547560	595370	4547560	595486
	63	4547560	595387	4547560	595493
	80	4547560	595394	4547560	595509
	100	4547560	595400	4547560	595516
	125	4547560	595417	4547560	595523
	160	4547560	595424	4547560	595530

Model	I_n (A)	3P		4P	
S160-SF *I*cu = 40kA @ 400V AC Front Connection (FC)	16	4547560	596049	4547560	596155
	20	4547560	596056	4547560	596162
	25	4547560	596063	4547560	596179
	32	4547560	596070	4547560	596186
	40	4547560	596087	4547560	596193
	50	4547560	596094	4547560	596209
	63	4547560	596100	4547560	596216
	80	4547560	596117	4547560	596223
	100	4547560	596124	4547560	596230
	125	4547560	596131	4547560	596247
	160	4547560	596148	4547560	596254

TB2 LITE 160 FRAME

Adjustable thermal and fixed magnetic MCCBs with Cable Clamps

Model	I_R (A)	3P		4P	
E160-SJ *I*cu = 16kA @ 400V AC Cable clamps (FW)	16 - 25	4547560	592263	4547560	592409
	25 - 40	4547560	592270	4547560	592416
	40 - 63	4547560	592287	4547560	592423
	50 - 80	4547560	592294	4547560	592430
	63 - 100	4547560	592300	4547560	592447
	80 - 125	4547560	592317	4547560	592454
	100 - 160	4547560	592324	4547560	592461

Model	I_R (A)	3P		4P	
S160-SCJ *I*cu = 25kA @ 400V AC Cable clamps (FW)	16 - 25	4547560	591983	4547560	592126
	25 - 40	4547560	591990	4547560	592133
	40 - 63	4547560	592003	4547560	592140
	50 - 80	4547560	592010	4547560	592157
	63 - 100	4547560	592027	4547560	592164
	80 - 125	4547560	592034	4547560	592171
	100 - 160	4547560	592041	4547560	592188

Model	I_R (A)	3P		4P	
S160-SJ *I*cu = 40kA @ 400V AC Cable clamps (FW)	16 - 25	4547560	592546	4547560	592683
	25 - 40	4547560	592553	4547560	592690
	40 - 63	4547560	592560	4547560	592706
	50 - 80	4547560	592577	4547560	592713
	63 - 100	4547560	592584	4547560	592720
	80 - 125	4547560	592591	4547560	592737
	100 - 160	4547560	592607	4547560	592744

Switch Disconnectors

Model	I_R (A))	3P		4P	
S160-SN Front Connection (FC)	160	4547560	597107	4547560	597114

ORDER CODES

TB2 LITE 160 FRAME

MCCBs for use Above 250V DC

Model	I_n (A)	3P	
S160-SD *I*cu = 5kA @ 600V DC *I*cu = 10kA @ 350V DC Front Connection (FC)	25	4547560	936203
	32	4547560	936210
	40	4547560	936227
	63	4547560	936234
	80	4547560	936241
	100	4547560	936258
	125	4547560	936265
	160	4547560	936272

Model	I_n (A)	3P	
S160-GD *I*cu = 10kA @ 600V DC *I*cu = 15kA @ 500V DC Front Connection (FC)	25	4547560	937064
	32	4547560	937071
	40	4547560	937088
	63	4547560	937095
	80	4547560	937101
	100	4547560	937118
	125	4547560	937125
	160	4547560	937132

Switch Disconnectors for use above 250V

Model	I_n (A)	3P	
S160-SDN Front Connection (FC) 600V DC	160	4547560	936333

TB2 LITE 160 FRAME

Accessories

Auxiliary Switches (AX)

Field Fit Accessory	Code	
Changeover (1AB)	4547560	002489
Changeover for low currents (1AB) (mA)	4547560	002892

Alarm Switches (AL)

Field Fit Accessory	Code	
Changeover (left pole)	4547560	002557
Changeover (right pole)	4547560	002564

Shunt Trips (SHT)

Field Fit Accessory	Code	
AC 100-120V	4547560	002649
AC 200-240V	4547560	002656
AC 380-450V	4547560	002663
DC 24V	4547560	002670
DC 48V	4547560	002687
DC 100-120V	4547560	002694
DC 200-240V	4547560	002700

ORDER CODES

TB2 LITE 160 FRAME

Accessories

Undervoltage Trips (UVT)

Field Fit Accessory	Code	
AC 100-120V	4547560	002779
AC 200-240V	4547560	002786
AC 380-450V	4547560	002793
DC 24V	4547560	002809
DC 100-120V	4547560	002816
DC 200-240V	4547560	002823
AC 100-110V Time Delay for 3P	4547560	002908
AC 200-220V Time Delay for 3P	4547560	002915
AC 380-415V Time Delay for 3P	4547560	002922
DC 24V Time Delay for 3P	4547560	002939
DC 100-110V Time Delay for 3P	4547560	002946
DC 200-220V Time Delay for 3P	4547560	002953
AC 115V to 120V Time Delay for 3P	4547560	002960
AC 230-240V Time Delay for 3P	4547560	002977
AC 440V-450V Time Delay for 3P	4547560	002984
DC 115V to 120V Time Delay for 3P	4547560	002981
DC 230-240V Time Delay for 3P	4547560	003004
AC 100-110V Time Delay for 4P	4547560	003011
AC 200-220V Time Delay for 4P	4547560	003028
AC 380-415V Time Delay for 4P	4547560	003035
DC 24V Time Delay for 4P	4547560	003042
DC 100-110V Time Delay for 4P	4547560	003059
DC 200-220V Time Delay for 4P	4547560	003066
AC 115V to 120V Time Delay for 4P	4547560	003073
AC 230-240V Time Delay for 4P	4547560	003080
AC 440V-450V Time Delay for 4P	4547560	003097
DC 115V to 120V Time Delay for 4P	4547560	003103
DC 230-240V Time Delay for 4P	4547560	003110

TB2 LITE 160 FRAME

Accessories

Extension Bars

Field Fit Accessory	Code	
3 bars (straight) (60-160A)	4547560	061486
3 bars (spread) (60-160A)	4547560	066948
4 bars (straight) (60-160A)	4547560	061493
4 bars (spread) (60-160A)	4547560	066955

Horizontal Rear Connections

Field Fit Accessory	Code	
3 studs (60 - 160A)	4547560	061783
4 studs (60 - 160A)	4547560	061790
3 studs (10 - 50A)	4547560	061738
4 studs (10 - 50A)	4547560	061745

External Operating Handles Breaker Mounted Type (HB)

Field Fit accessory	Code	
Black handle IP3X	4547560	906046
Red handle IP3X	4547560	906527
Black handle IP5X	4547560	906053
Red handle IP5X	4547560	906534

External Operating Handles Panel Mounted Type

Field Fit Accessory	Code	
S Type Black handle IP55	4547560	067174
S Type Black handle IP65	4547560	067198

ORDER CODES

TB2 LITE 160 FRAME

Accessories

Slide Type Mechanical Interlocks (MS)

Field Fit Accessory	Code	
Front / rear connection 160AF 3P	4547560	066962
Front / rear connection 160AF 4P	4547560	066979

Order one part between two MCCBs

Handle Locks (HL)

Field Fit Accessory	Code	
For 160 / 250AF	4547560	064906

Terminal Covers for Front Connection (FC)

Field Fit Accessory	Code	
3P, 1 cover long	4547560	065248
4P, 1 cover long	4547560	065255
3P, 1 cover wide (for spread extension bars)	4547560	065262
4P, 1 cover wide (for spread extension bars)	4547560	065279
Terminal cover lock	4547560	066917

Terminal Covers for Rear Connection

Field Fit Accessory	Code	
3P, 1 cover	4547560	065453
4P, 1 cover	4547560	065460
Terminal cover lock	4547560	066917

Interpole Barriers (BA)

Field Fit Accessory	Code	
Interpole barriers are supplied as standard 2 pieces per 3P MCCB, 3 pieces per 4P MCCB. For additional barriers please order individually. 1 Barrier	4547560	065682

TB2 LITE 160 FRAME

Accessories

Lead Terminal Block

Field Fit Accessory	Code	
Left side	4547560	065743
Right side	4547560	065736

Din Rail Adapter

Field Fit Accessory	Code	
Din Rail Adapter	4547560	066900

ORDER CODES

TB2 LITE 250 FRAME

Adjustable Thermal and Adjustable Magnetic MCCBs

Model	I_R (A)	3P		4P	
E250-SCJ *I*cu = 16kA @ 400V AC Front Connection (FC)	32 - 50	4547560	933486	4547560	933509
	40 - 63	4547560	933493	4547560	933516
	63 - 100	4547560	929540	4547560	929595
	80 - 125	4547560	929557	4547560	929601
	100 - 160	4547560	929564	4547560	929618
	125 - 200	4547560	929571	4547560	929625
	160 - 250	4547560	929588	4547560	929632

Model	I_R (A)	3P		4P	
E250-SJ *I*cu = 25kA @ 400V AC Front Connection (FC)	32 - 50	4547560	933523	4547560	933547
	40 - 63	4547560	933530	4547560	933554
	63 - 100	4547560	930485	4547560	930584
	80 - 125	4547560	930492	4547560	930591
	100 - 160	4547560	930508	4547560	930607
	125 - 200	4547560	930515	4547560	930614
	160 - 250	4547560	930522	4547560	930621

Model	I_R (A)	3P		4P	
S250-SJ *I*cu = 40 kA @ 400V DC Front Connection (FC)	32 - 50	4547560	933561	4547560	933608
	40 - 63	4547560	933578	4547560	933615
	100 - 160	4547560	930683	4547560	930744
	125 - 200	4547560	930690	4547560	930751
	160 - 250	4547560	930706	4547560	930768

TB2 LITE 250 FRAME

Fixed Thermal and Fixed Magnetic MCCBs with Front Connections

Model	I_n (A)	3P		4P	
E250-SCF I_{cu} = 16kA @ 400V AC Front Connection (FC)	50	4547560	933363	4547560	933387
	63	4547560	933370	4547560	933394
	100	4547560	936340	4547560	936357
	125	4547560	936304	4547560	929366
	150	4547560	929311	4547560	929373
	175	4547560	929328	4547560	929380
	200	4547560	929335	4547560	929397
	225	4547560	929342	4547560	929403
	250	4547560	929359	4547560	929410

Model	I_n (A)	3P		4P	
E250-SF I_{cu} = 25kA @ 400V AC Front Connection (FC)	50	4547560	933400	4547560	933424
	63	4547560	933417	4547560	933431
	100	4547560	936364	4547560	936371
	125	4547560	930126	4547560	929489
	150	4547560	930133	4547560	929496
	175	4547560	930140	4547560	929502
	200	4547560	930157	4547560	929519
	225	4547560	930164	4547560	929526
	250	4547560	930171	4547560	929533

Model	I_n (A)	3P		4P	
S250-SF I_{cu} = 40kA @ 400V AC Front Connection (FC)	50	4547560	933448	4547560	933462
	63	4547560	933455	4547560	933479
	100	4547560	936388	4547560	936395
	125	4547560	930300	4547560	930423
	150	4547560	930317	4547560	930430
	175	4547560	930324	4547560	930447
	200	4547560	930331	4547560	930454
	225	4547560	930348	4547560	930461
	250	4547560	930355	4547560	930478

Switch Disconnectors

Model	I_n (A)	3P		4P	
S250-SN Front Connection (FC)	250	4547560	930342	4547560	930973

ORDER CODES

TB2 LITE 250 FRAME

MCCBs for Use Above 250V DC

Model	I_n (A)	3P	
S250-SD Icu = 5kA @ 600V DC Icu = 10kA @ 350V DC Front Connection (FC)	100	4547560	941092
	125	4547560	941108
	160	4547560	941115
	200	4547560	941122
	250	4547560	941139

Model	I_n (A)	3P	
S250-GD Icu = 10kA @ 600V DC Icu = 15kA @ 500V DC Front Connection (FC)	100	4547560	941177
	125	4547560	941184
	160	4547560	941191
	200	4547560	941207
	250	4547560	941214

Switch Disconnectors for use above 250V DC

Model	I_n (A)	3P	
S250-SDN Front Connection (FC) 600V DC	250	4547560	941245

TB2 LITE 250 FRAME

Accessories

Auxiliary Switches (AX)

Field Fit Accessory	Code	
Changeover (1AB)	4547560	002489
Changeover for low currents (1AB) (mA)	4547560	002892

Alarm Switches (AL)

Field Fit Accessory	Code	
Changeover (left pole)	4547560	002557
Changeover (right pole)	4547560	002564

Shunt Trips (SHT)

Field Fit Accessory	Code	
AC 100-120V	4547560	002649
AC 200-240V	4547560	002656
AC 380-450V	4547560	002663
DC 24V	4547560	002670
DC 48V	4547560	002687
DC 100-120V	4547560	002694
DC 200-240V	4547560	002700

ORDER CODES

TB2 LITE 250 FRAME

Accessories

Undervoltage Trips (UVT)

Field Fit Accessory	Code	
AC 100-120V	4547560	002779
AC 200-240V	4547560	002786
AC 380-450V	4547560	002793
DC 24V	4547560	002809
DC 100-120V	4547560	002816
DC 200-240V	4547560	002823
DC 24V Time Delay for 3P	4547560	002939
DC 100-110V Time Delay for 3P	4547560	002946
DC 200-220V Time Delay for 3P	4547560	002953
AC 100V To 110V Time Delay for 3P	4547560	002908
AC 115V to 120V Time Delay for 3P	4547560	002960
AC 200V to 220V Time Delay for 3P	4547560	002915
AC 230-240V Time Delay for 3P	4547560	002977
AC 380V to 415V Time Delay for 3P	4547560	002922
AC 440V-450V Time Delay for 3P	4547560	002984
DC 115V to 120V Time Delay for 3P	4547560	002960
DC 230-240V Time Delay for 3P	4547560	003004
AC 100-110V Time Delay for 4P	4547560	003011
AC 200-220V Time Delay for 4P	4547560	003028
AC 380-415V Time Delay for 4P	4547560	003035
DC 24V Time Delay for 4P	4547560	003042
DC 100-110V Time Delay for 4P	4547560	003059
DC 200-220V Time Delay for 4P	4547560	003066
AC 115V to 120V Time Delay for 4P	4547560	003073
AC 230-240V Time Delay for 4P	4547560	003080
AC 440V-450V Time Delay for 4P	4547560	003097
DC 115V to 120V Time Delay for 4P	4547560	003103
DC 230-240V Time Delay for 4P	4547560	003110

TB2 LITE 250 FRAME

Accessories

Extension Bars

Field Fit Accessory	Code	
3 Bars (Straight)	4547560	061608
3 Bars (Spread)	4547560	061622
4 Bars (Straight)	4547560	061615
4 Bars (Spread)	4547560	061639

Rear Connections

Field Fit Accessory	Code	
3 Studs	4547560	061844
4 Studs	4547560	061851

Cable Clamps

Field Fit Accessory	Code	
3 clamps	4547560	062247
4 clamps	4547560	062254

ORDER CODES

TB2 LITE 250 FRAME

Accessories

Motor Operation (MC)

Field Fit Accessory	Code	
100V to 110V AC	4547560	905728
200V to 220V AC	4547560	905766
230V to 240V AC	4547560	905803
24V DC	4547560	905841
48V DC	4547560	905889
100V - 110V DC	4547560	905926
200V - 220V DC	4547560	905964

Motor Operation (MC) with Auto Reset

Field Fit Accessory	Code	
100V to 110V AC	4547560	905742
200V to 220V AC	4547560	905780
230V to 240V AC	4547560	905827
24V DC	4547560	905865
48V DC	4547560	905902
100V - 110V DC	4547560	905940
200V - 220V DC	4547560	905988

Motor plus keylock available on request

TB2 LITE 250 FRAME

Accessories

External Operating Handles Breaker Mounted Type (HB)

Field Fit Accessory	Code	
Black handle IP3X	4547560	907005
Red handle IP3X	4547560	907487
Black handle IP5X	4547560	907012
Red handle IP5X	4547560	907494

External Operating Handles Panel Mounted Type (S Type)

Field Fit Accessory	Code	
S Type black handle IP55	4547560	066344
S Type red handle IP55	4547560	066351
S Type black handle IP65	4547560	066382
S Type red handle IP65	4547560	066399

Order one part between two MCCBs

Slide Type Mechanical Interlocks (MS)

Field Fit Accessory	Code	
Front, rear connection 250AF 3P	4547560	066986
Front, rear connection type 250AF 4P	4547560	066993

Link Type Mechanical Interlocks (ML)

Field Fit Accessory	Code	
Interlock Link RHS	4547560	064869
Interlock Link LHS 3P	4547560	064876
Interlock Link LHS 4P	4547560	064883

Order one interlock part for each MCCB

ORDER CODES

TB2 LITE 250 FRAME

Accessories

Wire Type Mechanical Interlock (MW)

Field Fit Accessory	Code	
Interlock Wire type mechanism	4547560	064890
1m length interlock cable	4547560	036064
1.5m length interlock cable	4547560	036057

Order one interlock part for each MCCB and one cable between each pair of MCCBs

Handle Locks (HL)

Field Fit Accessory	Code	
for 160 / 250AF	4547560	064906

Terminal Covers for Front Connection (FC)

Field Fit Accessory	Code	
3P, 1 cover (Short)	4547560	065286
4P, 1 cover (Short)	4547560	065293
3P, 1 cover (Long)	4547560	065309
4P, 1 cover (Long)	4547560	065316
3P, 1 cover (Spread)	4547560	065323
4P, 1 cover (Spread)	4547560	065330
Terminal cover lock	4547560	065644

Terminal Covers for Rear Connection

Field Fit Accessory	Code	
3P, 1 cover	4547560	067075
4P, 1 cover	4547560	067082
Terminal cover lock	4547560	065644

TB2 LITE 250 FRAME

Accessories

Terminal Covers for Cable Clamp Connection

Field Fit Accessory	Code	
3P, 1 cover	4547560	065620
4P, 1 cover	4547560	065637
Terminal cover lock	4547560	065644

Interpole Barriers (BA)

Field Fit Accessory	Code	
Interpole barriers are supplied as standard 2 pieces per 3P MCCB, 3 pieces per 4P MCCB. for additional barriers please order individually.		
1 Barrier	4547560	065729

Lead Terminal Block

Field Fit Accessory	Code	
Left Side	4547560	065743
Right Side	4547560	065736

ORDER CODES

TB2 S125 FRAME

Adjustable Thermal and Adjustable Magnetic MCCBs

Model	I_R (A)	3P		4P	
S125-NJ *I*cu = 36kA @ 400V AC Front Connection (FC)	32 - 50	4547560	255021	4547560	255120
	40 - 63	4547560	255038	4547560	255137
	63 - 100	4547560	255045	4547560	255144
	79 - 125	4547560	255052	4547560	255151

Model	I_R (A)	3P		4P	
S125-GJ *I*cu = 65kA @ 400V AC Front Connection (FC)	13 - 20	4547560	255205	4547560	255304
	20 - 32	4547560	255212	4547560	255311
	32 - 50	4547560	255229	4547560	255328
	40 - 63	4547560	255236	4547560	255335
	63 - 100	4547560	255243	4547560	255342
	79 - 125	4547560	255250	4547560	255359

MCCBs with Magnetic Trip Only

Model	I_R (A)	3P		4P	
S125-NJ *I*cu = 36kA @ 400V AC Front Connection (FC)	12 - 20	4547560	257001	4547560	257100
	20 - 32	4547560	257018	4547560	257117
	32 - 50	4547560	257025	4547560	257124
	40 - 63	4547560	257032	4547560	257131
	63 - 100	4547560	257049	4547560	257148
	80 - 125	4547560	257056	4547560	257155

Model	I_R (A)	3P		4P	
S125-GJ *I*cu = 65kA @ 400V AC Front Connection (FC)	12 - 20	4547560	257506	4547560	257605
	20 - 32	4547560	257513	4547560	257612
	32 - 50	4547560	257520	4547560	257629
	40 - 63	4547560	257537	4547560	257636
	63 - 100	4547560	257544	4547560	257643
	80 - 125	4547560	257551	4547560	257650

TB2 S125 FRAME

MCCBs with Adjustable Thermal and Fixed Low Instantaneous Trip: For Generator

Model	I_R (A)	3P		4P	
S125-NJ *I*cu = 36kA @ 400V AC Front Connection (FC)	12 - 20	4547560	258244	4547560	258305
	20 - 32	4547560	258251	4547560	258312
	63 - 100	4547560	258268	4547560	258329
	80 - 125	4547560	258275	4547560	258336

Model	I_R (A)	3P		4P	
S125-GJ *I*cu = 65kA @ 400V AC Front Connection (FC)	12 - 20	4547560	258541	4547560	258602
	20 - 32	4547560	258558	4547560	258619
	63 - 100	4547560	258565	4547560	258626
	80 - 125	4547560	258572	4547560	258633

MCCBs for 1000V AC

Model	I_n (A)	3P	
VS125-NJ 1000V AC *I*cu = 6kA Thermal Magnetic	20 *	4547560	270932
	32 *	4547560	270949
	50	4547560	270956
	63	4547560	270963
	100	4547560	270970
	125	4547560	270987

* Icu = 4kA

ORDER CODES

TB2 S125 FRAME

Circuit Breakers with Residual Current Protection (CBR)

Model	I_R (A)	3P		4P	
ZE125-NJ *I*cu = 25 kA @ 400V AC Front Connection (FC)	12 - 20	4547560	622106	4547560	622205
	20 - 32	4547560	622113	4547560	622212
	32 - 50	4547560	622120	4547560	622229
	40 - 63	4547560	622137	4547560	622236
	63 - 100	4547560	622144	4547560	622243
	80 - 125	4547560	622151	4547560	622250

Model	I_R (A)	3P		4P	
ZS125-NJ *I*cu = 36kA @ 400V AC Front Connection (FC)	12 - 20	4547560	622502	4547560	622601
	20 - 32	4547560	622519	4547560	622618
	32 - 50	4547560	622526	4547560	622625
	40 - 63	4547560	622533	4547560	622632
	63 - 100	4547560	622540	4547560	622649
	80 - 125	4547560	622557	4547560	622656

Model	I_R (A)	3P		4P	
ZS125-GJ *I*cu = 65kA @ 400V AC Front Connection (FC)	12 - 20	4547560	622304	4547560	622403
	20 - 32	4547560	622311	4547560	622410
	32 - 50	4547560	622328	4547560	622427
	40 - 63	4547560	622335	4547560	622434
	63 - 100	4547560	622342	4547560	622441
	80 - 125	4547560	622359	4547560	622458

CBR with Residual Monitor and Remote Trip

Model	I_R (A)	3P		4P	
ZE125-NJ ZP *I*cu = 25kA @ 400V AC Front Connection (FC)	12 - 20	4547560	622700	4547560	622809
	20 - 32	4547560	622717	4547560	622816
	32 - 50	4547560	622724	4547560	622823
	40 - 63	4547560	622731	4547560	622830
	63 - 100	4547560	622748	4547560	622847
	80 - 125	4547560	622755	4547560	622854

TB2 S125 FRAME

CBR with Residual Monitor and Remote Trip

Model	I_R (A)	3P		4P	
ZS125-NJ ZP I_{cu} = 36kA @ 400V AC Front Connection (FC)	12 - 20	4547560	623103	4547560	623202
	20 - 32	4547560	623110	4547560	623219
	32 - 50	4547560	623127	4547560	623226
	40 - 63	4547560	623134	4547560	623233
	63 - 100	4547560	623141	4547560	623240
	80 - 125	4547560	623158	4547560	623257

Model	I_R (A)	3P		4P	
ZS125-GJ ZP I_{cu} = 65kA @ 400V AC Front Connection (FC)	12 - 20	4547560	622908	4547560	623004
	20 - 32	4547560	622915	4547560	623011
	32 - 50	4547560	622922	4547560	623028
	40 - 63	4547560	622939	4547560	623035
	63 - 100	4547560	622946	4547560	623042
	80 - 125	4547560	622953	4547560	623059

Switch Disconnectors

Model	I_n (A)	3P		4P	
S125-NN Front Connection (FC)	125	4547560	244902	4547560	245008

ORDER CODES

TB2 S125 FRAME

Accessories

Auxiliary Switches (AX) General Purpose

Field Fit Accessory	Code	
Changeover	4547560	000348
Changeover for low currents (mA)	4547560	000324

Auxiliary Switches (AX) Heavy Duty

Field Fit Accessory	Code	
Normally open	4547560	000300
Normally closed	4547560	000317

Alarm Switches (AL) General Purpose

Field Fit Accessory	Code	
Changeover	4547560	000744
Changeover for low currents (mA)	4547560	000720

Alarm Switches (AL) Heavy Duty

Field Fit Accessory	Code	
Normally open	4547560	000706
Normally closed	4547560	000713

Shunt Trips (SHT)

Field Fit Accessory	Code	
AC 100-120V	4547560	000904
AC 200-240V	4547560	000911
AC 380-450V	4547560	000928
DC 12V	4547560	000973
DC 24V	4547560	000935
DC 48V	4547560	000942
DC 100-120V	4547560	000959
DC 200-240V	4547560	000966

TB2 S125 FRAME

Accessories

Undervoltage Trips (UVT)

Field Fit Accessory - Not compatible with CBR	Code	
AC 100-120V	4547560	001208
AC 200-240V	4547560	001215
AC 380-450V	4547560	001222
DC 24V	4547560	001239
DC 100-120V	4547560	001246
DC 200-240V	4547560	001253
AC 100-110V Time-delay	4547560	001307
AC 100-120V Time-delay	4547560	001369
AC 200-220V Time-delay	4547560	001314
AC 230-240V Time-delay	4547560	001376
AC 380-415V Time-delay	4547560	001321
AC 440-450V Time-delay	4547560	001383
DC 24V Time-delay Version	4547560	001338
DC 100-110V Time-delay	4547560	001345
DC 115-120V Time-delay	4547560	001390
DC 200-220V Time-delay	4547560	001352
DC 220-240V Time-delay	4547560	001406

*Not suitable for use with CBR

Extension Bars (FB)

Field Fit Accessory	Code	
3 bars (Straight)	4547560	010026
4 bars (Straight)	4547560	010040

ORDER CODES

TB2 S125 FRAME

Accessories

Rear Connections (RC)

Field Fit Accessory - Not compatible for use with CBR	Code	
3 studs	4547560	080883
4 studs	4547560	080890

Fixed Part of Plug-in MCCB (PM)

Field Fit Accessory - Not compatible for use with CBR	Code	
3P	4547560	060267
4P	4547560	060359

Plug-in Conversion for MCCB

Field Fit Accessory - Not compatible for use with CBR or MCCBs for 1000V AC	Code	
3P	4547560	800160
4P	4547560	800177

Extension Terminal for Fixed Part of Plug-in MCCB (PF)

Field Fit Accessory - Not compatible for use with CBR	Code	
3 bars	4547560	045813
4 bars	4547560	045820

Terminal Covers for Extension Terminals for Fixed Part of Plug-in MCCB

Field Fit Accessory	Code	
3P 125A Plug-in Base, 1 Terminal Cover	4547560	045707
4P 125A Plug-in Base, 1 Terminal Cover	4547560	045714

Control Wiring Terminals for Plug-in MCCBs

Field Fit Accessory - Not compatible for use with CBR	Code	
Plug for auxiliary switches and alarm switches	4547560	800108
Plug for shunt trips and undervoltage trips	4547560	800115

Order one plug for each electrical accessory.

TB2 S125 FRAME

Accessories

Control Wiring Terminals for Plug-in MCCBs

Field Fit Accessory - Not compatible for use with CBR	Code	
Socket	4547560	045004

Order one socket for each electrical accessory.

Cable Clamps (FW)

Field Fit Accessory - Not compatible with CBR	Code	
3 clamps	4547560	080715
4 clamps	4547560	080722

Motor Operation (MC)

Field Fit Accessory	Code	
AC 100-110V	4547560	755606
AC 200-220V	4547560	755613
AC 230-240V	4547560	755620
DC 24V	4547560	755637
DC 48V	4547560	755644
DC 100V	4547560	755651
DC 200-220V	4547560	755668

Motor Operation (MC) with Automatic Reset

Field Fit Accessory	Code	
AC 100-110V	4547560	755873
AC 200-220V	4547560	755880
AC 230-240V	4547560	755897
DC 24V	4547560	755675
DC 48V	4547560	755682
DC 100V	4547560	755699
DC 200-220V	4547560	755583

ORDER CODES

TB2 S125 FRAME

Accessories

External Operating Handles (Breaker Mounted Type) (HB)

Field Fit Accessory	Code	
Black handle IP3X	4547560	725623
Black handle IP3X with keylock	4547560	725609
Red handle IP3X	4547560	726101
Red handle IP3X with keylock	4547560	726088
Black handle IP5X	4547560	725630
Black handle IP5X with keylock	4547560	725616
Red handle IP5X	4547560	726118
Red handle IP5X with keylock	4547560	726095

External Operating Handles (Panel Mounted Type) (S Type)

Field Fit Accessory	Code	
'S Type' Black handle IP55	4547560	060601
'S Type' Red handle IP55	4547560	060618
'S Type' Black handle IP65	4547560	060649
'S Type' Red handle IP65	4547560	060656
Castell Cam for K Lock	4547560	800634

Slide Type Mechanical Interlocks (MS)

Field Fit Accessory	Code	
Front / rear connection 125AF 3P	4547560	033513
Front / rear connection 125AF 4P	4547560	033520
Plug-in type 125AF 3P	4547560	033544
Plug-in type 125AF 4P	4547560	033551

Order one part between two MCCBs

Link Type Mechanical Interlocks (ML)

Field Fit Accessory - not compatible with CBR	Code	
Right side	4547560	035005
Left side 3P	4547560	035012
Left side 4P	4547560	035029

Order one interlock part for each MCCB

TB2 S125 FRAME

Accessories

Wire Type Mechanical Interlocks (MW)

Field Fit Accessory - not compatible with CBR	Code	
Interlock Mechanism	4547560	036026
1m length interlock cable	4547560	036064
1.5m length interlock cable	4547560	036057

Order one interlock part for each MCCB and one cable between two MCCBs

Handle Locks (HL)

Field Fit Accessory	Code	
For 125 / 250AF	4547560	037016

Terminal Covers for Front Connection (CF)

Field Fit Accessory	Code	
3P, 1 cover	4547560	080425
4P, 1 cover	4547560	080432
Terminal cover lock	4547560	038006

Terminal Covers for Rear Connection and Plug-In (CR)

Field Fit Accessory	Code	
3P, 1 cover	4547560	080487
4P, 1 cover	4547560	080494
Terminal cover lock	4547560	038006

Terminal Covers for Cable Clamps (CS)

Field Fit Accessory	Code	
3P, 1 cover	4547560	080555
4P, 1 cover	4547560	080562
Terminal cover lock	4547560	038006

ORDER CODES

TB2 S125 FRAME

Accessories

Interpole Barriers (BA)

Field Fit Accessory	Code	
1 barrier	4547560	043062

Interpole barriers are supplied as standard: 2 pieces per 3P MCCB, 3 pieces per 4P MCCB.
For additional barriers please order individually.

Lead Terminal Block

Field Fit Accessory	Code	
Left side	4547560	044526
Right side	4547560	044533

DIN Rail Adapter

Field Fit Accessory	Code	
DIN rail adapter for 125AF & 250AF	4547560	045127

Neutral Link

Field Fit Accessory	Code	
125A Neutral Link	4547560	800481
125/250A Neutral Link Shroud	4547560	800559

Door Flange

Field Fit Accessory	Code	
For toggle operation	4547560	044908
For motorised operation	4547560	044915

TB2 S125 FRAME

Automatic Changeover Pairs

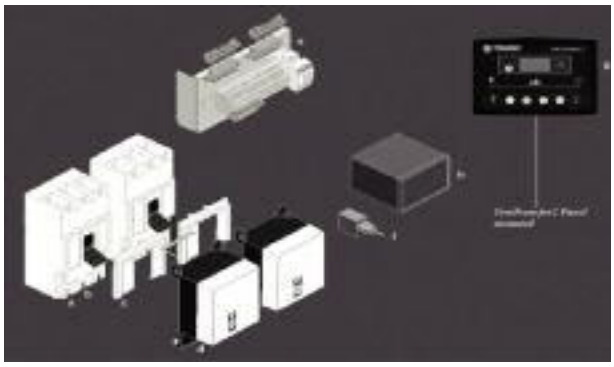

We offer a range of accessories which allow our customers to produce automatic changeover systems using our circuit breakers.

Wiring between the components is the customers responsibility, but can be easily completed by following the Terasaki Wiring Diagram, available on request.

Order codes for the necessary components are shown in the table below:

125A Frame		Code	Function
a.	Two TemBreak 2 MCCBs, 125A Frame	Refer to MCCB order codes	Switching and protection of the load.
b.	2 x Auxillary switch for mains MCCB 2 x Auxillary switch for generator MCCB Alarm switch for main MCCB Alarm switch for generator MCCB	2 x 000348 2 x 000348 000744 000744	Electrical interlocking and MCCB status.
c	Link type mechanical interlock (left)	035012*	Mechanical interlocking. Cable-type mechanical interlocking may alternatively be used.
	Link type mechanical interlock (right)	035005*	
or	Link type mechanical interlock (left, 4P)	035029	
d.	Motor operator for mains MCCB	Refer to “Motor Operator” Select code base on required voltage.	Automatic operation of circuit breaker.
	Motor operator for generator MCCB	Refer to “Motor Operator” Select code base on required voltage.	
e.	TemTransfer 2 Wiring Panel	304001006	Simplifies customer wiring. Terminal blocks and control relay are included. Only suitable when using Terasaki Wiring Diagram.
f.	TemTransfer 2 Reset Key Switch	304001005	Resets and isolates the system for maintenance. Only suitable when using Terasaki Wiring Diagram.
g.	TemTransfer 2 Automatic Changeover Controller	304001001	Monitors mains and generator voltages and controls transfer of load. Pre-configured to operate with Terasaki Wiring Diagram.
h.	TemTransfer 2 Power Supply 24V DC	304001003	Power Supply for TemTransfer 2. Also available in 12V DC.
	TemTransfer 2 Interface Kit (optional)	304001002	Optional: Allows re-configuration of TemTransfer 2, diagnostics and advanced parameter settings.

*Not available for CBR’s

ORDER CODES

TB2 S250 FRAME

Adjustable Thermal and Adjustable Magnetic MCCBs

Model	I_R (A)	3P		4P	
S160-NJ *I*cu = 36 kA @ 400V AC **I*cu = 30 kA @ 400V AC Front Connection (FC)	12 - 20*	4547560	326837	4547560	326905
	20 - 32*	4547560	326844	4547560	326912
	32 - 50	4547560	326851	4547560	326929
	40 - 63	4547560	326868	4547560	326936
	63 - 100	4547560	326875	4547560	326943
	80 - 125	4547560	326882	4547560	326950
	100 - 160	4547560	326899	4547560	326967

*Applies only to 20A and 32A models.

Model	I_R (A)	3P		4P	
S160-GJ *I*cu = 65 kA @ 400V AC Front Connection (FC)	32 - 50	4547560	327025	4547560	327124
	40 - 63	4547560	327032	4547560	327131
	63 - 100	4547560	327049	4547560	327148
	80 - 125	4547560	327056	4547560	327155
	100 - 160	4547560	327063	4547560	327162

Model	I_R (A)	3P		4P	
S250-NJ *I*cu = 36 kA @ 400V AC Front Connection (FC)	100 - 160	4547560	312021	4547560	312120
	125 - 200	4547560	312052	4547560	312151
	160 - 250	4547560	312038	4547560	312137

Model	I_R (A)	3P		4P	
S250-GJ *I*cu = 65 kA @ 400V AC Front Connection (FC)	100 - 160	4547560	312229	4547560	312328
	125 - 200	4547560	312250	4547560	312359
	160 - 250	4547560	312236	4547560	312335

TB2 S250 FRAME

MCCBs with Magnetic Trip Only

Model	I_n (A)	3P		4P	
S160-NJ *Icu* = 36 kA @ 400V AC **Icu* = 30 kA Magnetic Trip Only Front Connection (FC)	20*	4547560	328305	4547560	328404
	32*	4547560	328312	4547560	328411
	50	4547560	328329	4547560	328428
	63	4547560	328336	4547560	328435
	100	4547560	328343	4547560	328442
	125	4547560	328350	4547560	328459
	160	4547560	328367	4547560	328466

*Applies only to 20A and 32A models.

Model	I_n (A)	3P		4P	
S160-GJ *Icu* = 65 kA @ 400V AC Front Connection (FC)	50	4547560	328602	4547560	328701
	63	4547560	328619	4547560	328718
	100	4547560	328626	4547560	328725
	80 - 125	4547560	328633	4547560	328732
	100 - 160	4547560	328640	4547560	328749

Model	I_n (A)	3P		4P	
S250-NJ *Icu* = 36 kA @ 400V AC Front Connection (FC)	160	4547560	329302	4547560	329333
	200	4547560	329319	4547560	329340
	250	4547560	329326	4547560	329357

Model	I_n (A)	3P		4P	
S250-GJ *Icu*= 65 kA @ 400V AC Front Connection (FC)	160	4547560	329401	4547560	329432
	200	4547560	329418	4547560	329449
	250	4547560	329425	4547560	329456

ORDER CODES

TB2 S250 FRAME

MCCBs with Adjustable ~Thermal and Fixed Low Instantaneous Trip: For Generator

Model	I_R (A)	3P		4P	
S160-NJ *Icu* = 36 kA @ 400V AC **Icu* = 30 kA @ 400V AC Front Connection (FC)	12 - 20	4547560	329517	4547560	329616
	20 - 32	4547560	329524	4547560	329623
	63 - 100	4547560	329531	4547560	329630
	80 - 125	4547560	329548	4547560	329647
	100 - 160	4547560	329500	4547560	329609

*Applies only to 20A and 32A models.

Model	I_R (A)	3P		4P	
S160-GJ *Icu* = 65 kA @ 400V AC Front Connection (FC)	63 - 100	4547560	331008	4547560	331039
	80 - 125	4547560	331015	4547560	331046
	100 - 160	4547560	331022	4547560	331053

Model	I_n (A)	3P		4P	
S250-NJ *Icu* = 36 kA @ 400V AC Front Connection (FC)	100 - 160	4547560	330117	4547560	330216
	125 - 200	4547560	330124	4547560	330223
	160 - 250	4547560	330100	4547560	330209

Model	I_n (A)	3P		4P	
S250-GJ *Icu* = 65 kA @ 400V AC Front Connection (FC)	100 - 160	4547560	330414	4547560	330438
	125 - 200	4547560	330421	4547560	330445
	160 - 250	4547560	330407	4547560	330452

MCCBs for 1000V AC

Model	I_R (A)	3P	
VS250-NJ 1000V AC *Icu* = 6kA Thermal Magnetic	100 - 160	4547560	318504
	160 - 250	4547560	318511

TB2 S250 FRAME

Circuit Breakers with Residual Current Protection (CBR)

Model	I_R (A)	3P		4P	
ZE250-NJ *I*cu = 25 kA @ 400V AC Front Connection (FC)	100 - 160	4547560	642807	4547560	642906
	160 - 250	4547560	642814	4547560	642913

Model	I_R (A)	3P		4P	
ZS250-NJ *I*cu = 36kA @ 400V AC Front Connection (FC)	100 - 160	4547560	643002	4547560	643101
	160 - 250	4547560	643019	4547560	643118

Model	I_R (A)	3P		4P	
ZS250-GJ *I*cu = 65kA @ 400V AC Front Connection (FC)	100 - 160	4547560	643200	4547560	643309
	160 - 250	4547560	643217	4547560	643316

CBR with Residual Current Monitor and Remote Trip Module

Model	I_R (A)	3P		4P	
ZE250-NJ ZP *I*cu = 25 kA @ 400V AC Front Connection (FC)	100 - 160	4547560	644009	4547560	644108
	160 - 250	4547560	644016	4547560	644115

Model	I_R (A)	3P		4P	
ZS250-NJ ZP *I*cu = 36kA @ 400V AC Front Connection (FC)	100 - 160	4547560	644207	4547560	644306
	160 - 250	4547560	644214	4547560	644313

Model	I_R (A))	3P		4P	
ZS250-GJ ZP *I*cu = 65kA @ 400V AC Front Connection (FC)	100 - 160	4547560	644405	4547560	644504
	160 - 250	4547560	644412	4547560	644511

ORDER CODES

TB2 S250 FRAME

Circuit Breakers and Switch Disconnectors for use above 250V DC

Model	I_R (A)	3P		4P	
PVS160-SDL 750V DC *I*cu = 5kA Thermal Magnetic	50	4547560	938887		
	63	4547560	938894		
	100	4547560	938900		
	125	4547560	938917		
	160	4547560	938924		

Poles wired in series. Reverse Connection version available on request.

Model	I_R (A)	3P		4P	
PVS160-SDL 750V DC *I*cu = 10kA Thermal Magnetic	50			4547560	939297
	63			4547560	939303
	100			4547560	939310
	125			4547560	939327
	160			4547560	939334

Poles wired in series. Reverse Connection version available on request.

Model	I_R (A)	3P		4P	
PVS160-SDH 1000V DC *I*cu = 5kA Thermal Magnetic	50			4547560	939884
	63			4547560	939891
	100			4547560	939907
	125			4547560	939914
	160			4547560	939921

Poles wired in series. Reverse Connection version available on request.

Model	I_R (A)	3P		4P	
PVS250-SDL 750V DC *I*cu = 5kA Thermal Magnetic	100	4547560	938931		
	125	4547560	938948		
	160	4547560	938955		
	200	4547560	938962		
	250	4547560	938979		

Poles wired in series. Reverse Connection version available on request.

TB2 S250 FRAME

Circuit Breakers and Switch Disconnectors for use above 250V DC

Model	I_R (A)	3P		4P	
PVS250-SDL 750V DC *I*cu = 10kA Thermal Magnetic	100			4547560	939341
	125			4547560	939358
	160			4547560	939365
	200			4547560	939372
	250			4547560	939389

Poles wired in series. Reverse Connection version available on request.

Model	I_R (A)	3P		4P	
PVS250-SDH 1000V DC *I*cu = 5kA Thermal Magnetic	100			4547560	939938
	125			4547560	939945
	160			4547560	939952
	200			4547560	939969
	250			4547560	939976

Poles wired in series. Reverse Connection version available on request.

Model	I_n (A)	3P		4P	
PVS160-SNL 750V DC	160			4547560	939426

Poles wired in series. Reverse Connection version available on request.

Model	I_n (A)	3P		4P	
PVS160-SNH 1000V DC	160			4547560	940118

Poles wired in series. Reverse Connection version available on request.

Model	I_n (A)	3P		4P	
PVS250-SNL 750V DC	250			4547560	939457

Poles wired in series. Reverse Connection version available on request.

Model	I_n (A)	3P		4P	
PVS250-SNH 1000V DC	250			4547560	940149

Poles wired in series. Reverse Connection version available on request.

ORDER CODES

TB2 S250 FRAME

Switch Disconnectors

Model	I_n (A)	3P		4P	
S160-NN Front Connection (FC)	160	4547560	315800	4547560	315909
S250-NN Front Connection (FC)	250	4547560	316005	4547560	316104

TB2 S/H/L 250 FRAME

Adjustable Thermal and Adjustable Magnetic MCCBs

Model	I_R (A)	3P		4P	
H125-NJ Icu = 125kA @ 400V AC Front Connection (FC)	13 - 20	4547560	255403	4547560	255502
	20 - 32	4547560	255410	4547560	255519
	32 - 50	4547560	255427	4547560	255526
	40 - 63	4547560	255434	4547560	255533
	63 - 100	4547560	255441	4547560	255540
	80 - 125	4547560	255458	4547560	255557

Model	I_R (A)	3P		4P	
L125-NJ Icu = 200kA @ 400V AC Front Connection (FC)	13 - 20	4547560	255601	4547560	255700
	20 - 32	4547560	255618	4547560	255717
	32 - 50	4547560	255625	4547560	255724
	40 - 63	4547560	255632	4547560	255731
	63 - 100	4547560	255649	4547560	255748
	80 - 125	4547560	255656	4547560	255755

Model	I_R (A)	3P		4P	
H160-NJ Icu = 125 kA @ 400V AC Front Connection (FC)	100 - 160	4547560	318474	4547560	318573

Model	I_R (A)	3P		4P	
L160-NJ Icu = 200 kA @ 400V AC Front Connection (FC)	100 - 160	4547560	318672	4547560	318771

Model	I_R (A)	3P		4P	
H250-NJ Icu = 125 kA @ 400V AC Front Connection (FC)	100 - 160	4547560	312427	4547560	312526
	160 - 250	4547560	312434	4547560	312533

Model	I_R (A)	3P		4P	
L250-NJ Icu = 200 kA @ 400V AC Front Connection (FC)	100 - 160	4547560	312625	4547560	312724
	160 - 250	4547560	312632	4547560	312731

ORDER CODES

TB2 S/H/L 250 FRAME

Electronic MCCBs

Model	Protection Codes	I_R (A)	3P		4P	
S250-NE *I*cu = 36 kA @ 400V AC Front Connection (FC)	*A 40*	16 - 40	4547560	331701	4547560	331725
	AN 40	16 - 40			4547560	331749
	AP 40	16 - 40	4547560	331718	4547560	331732
	APN 40	16 - 40			4547560	331756
	A 125	50 - 125	4547560	331800	4547560	331824
	AN 125	50 - 125			4547560	331848
	AP 125	50 - 125	4547560	331817	4547560	331831
	APN 125	50 - 125			4547560	331855
	A 160	63 - 160	4547560	337802	4547560	337826
	AN 160	63 - 160			4547560	337840
	AP 160	63 - 160	4547560	337819	4547560	337833
	APN 160	63 - 160			4547560	337857
Electronic Protection Codes: *A - LSI* *P - Preferential Trip Alarm* *G - Ground Fault* *N - Neutral Protection*	*A 250*	100 - 250	4547560	331909	4547560	331923
	AN 250	100 - 250			4547560	331947
	AP 250	100 - 250	4547560	331916	4547560	331930
	APN 250	100 - 250			4547560	331954

Model	Protection Codes	I_R (A)	3P		4P	
S250-GE *I*cu = 65kA @ 400V AC Front Connection (FC)	*A 40*	16 - 40	4547560	332005	4547560	332029
	AN 40	16 - 40			4547560	332043
	AP 40	16 - 40	4547560	332012	4547560	332036
	APN 40	16 - 40			4547560	332050
	A 125	50 - 125	4547560	332104	4547560	332128
	AN 125	50 - 125			4547560	332142
	AP 125	50 - 125	4547560	332111	4547560	332135
	APN 125	50 - 125			4547560	332159
	A 160	63 - 160	4547560	337925	4547560	337949
	AN 160	63 - 160			4547560	337963
	AP 160	63 - 160	4547560	337932	4547560	337956
	APN 160	63 - 160			4547560	337970
Electronic Protection Codes: *A - LSI* *P - Preferential Trip Alarm* *G - Ground Fault* *N - Neutral Protection*	*A 250*	100 - 250	4547560	332203	4547560	332227
	AN 250	100 - 250			4547560	332241
	AP 250	100 - 250	4547560	332210	4547560	332234
	APN 250	100 - 250			4547560	332258

TB2 S/H/L 250 FRAME

Electronic MCCBs

Model	Protection Codes	I_R (A)	3P		4P	
S250-PE Icu = 70kA @ 400V AC Front Connection (FC)	*A 40*	16 - 40	4547560	327704	4547560	327728
	AN 40	16 - 40			4547560	327742
	AP 40	16 - 40	4547560	327711	4547560	327735
	APN 40	16 - 40			4547560	327759
	A 125	50 - 125	4547560	327803	4547560	327827
	AN 125	50 - 125			4547560	327841
	AP 125	50 - 125	4547560	327810	4547560	327834
	APN 125	50 - 125			4547560	327858
	A 160	63 - 160	4547560	327902	4547560	327926
	AN 160	63 - 160			4547560	327940
	AP 160	63 - 160	4547560	327919	4547560	327933
	APN 160	63 - 160			4547560	327957
Electronic Protection Codes: *A - LSI* *P - Preferential Trip Alarm* *G - Ground Fault* *N - Neutral Protection*	*A 250*	100 - 250	4547560	319006	4547560	319013
	AN 250	100 - 250			4547560	319044
	AP 250	100 - 250	4547560	319020	4547560	319037
	APN 250	100 - 250			4547560	319051

Model	Protection Codes	I_R (A)	3P		4P	
H250-NE Icu = 125kA @ 400V AC Front Connection (FC)	*A 40*	16 - 40	4547560	328008	4547560	328022
	AN 40	16 - 40			4547560	328046
	AP 40	16 - 40	4547560	328015	4547560	328039
	APN 40	16 - 40			4547560	328053
	A 125	50 - 125	4547560	328107	4547560	328121
	AN 125	50 - 125			4547560	328145
	AP 125	50 - 125	4547560	328114	4547560	328138
	APN 125	50 - 125			4547560	328152
	A 160	63 - 160	4547560	328206	4547560	328220
	AN 160	63 - 160			4547560	328244
	AP 160	63 - 160	4547560	328213	4547560	328237
	APN 160	63 - 160			4547560	328251
Electronic Protection Codes: *A - LSI* *P - Preferential Trip Alarm* *G - Ground Fault* *N - Neutral Protection*	*A 250*	100 - 250	4547560	319105	4547560	319112
	AN 250	100 - 250			4547560	319143
	AP 250	100 - 250	4547560	319129	4547560	319136
	APN 250	100 - 250			4547560	319150

ORDER CODES

TB2 S/H/L 250 FRAME

MCCBs with Measurement and Data Communication

Model	Protection Codes	I_R (A)	3P	4P
S250-GE *I*cu = 65kA @ 400V AC Front Connection (FC)	*AC 40*	16 - 40	Contact Terasaki	Contact Terasaki
	ACN 40	16 - 40		Contact Terasaki
	ACPZ 40	16 - 40	Contact Terasaki	Contact Terasaki
	ACNPZ 40	16 - 40		Contact Terasaki
	AC 125	50 - 125	Contact Terasaki	Contact Terasaki
	ACN 125	50 - 125		Contact Terasaki
	ACPZ 125	50 - 125	Contact Terasaki	Contact Terasaki
	ACNPZ 125	50 - 125		Contact Terasaki
	AC 160	63 - 160	Contact Terasaki	Contact Terasaki
	ACN 160	63 - 160		Contact Terasaki
	ACPZ 160	63 - 160	Contact Terasaki	Contact Terasaki
	ACNPZ 160	63 - 160		Contact Terasaki
Electronic Protection Codes: *AC - LSI and Modbus Communication* *P - Preferential Trip Alarm* *Z - Zone Interlock* *N - Neutral Protection*	*AC 250*	100 - 250	Contact Terasaki	Contact Terasaki
	ACN 250	100 - 250		Contact Terasaki
	ACPZ 250	100 - 250	Contact Terasaki	Contact Terasaki
	ACNPZ 250	100 - 250		Contact Terasaki

Model	Protection Codes	I_R (A)	3P	4P
H250-NE *I*cu = 125kA @ 400V AC Front Connection (FC)	*AC 40*	16 - 40	Contact Terasaki	Contact Terasaki
	ACN 40	16 - 40		Contact Terasaki
	ACPZ 40	16 - 40	Contact Terasaki	Contact Terasaki
	ACNPZ 40	16 - 40		Contact Terasaki
	AC 125	50 - 125	Contact Terasaki	Contact Terasaki
	ACN 125	50 - 125		Contact Terasaki
	ACPZ 125	50 - 125	Contact Terasaki	Contact Terasaki
	ACNPZ 125	50 - 125		Contact Terasaki
	AC 160	63 - 160	Contact Terasaki	Contact Terasaki
	ACN 160	63 - 160		Contact Terasaki
	ACPZ 160	63 - 160	Contact Terasaki	Contact Terasaki
	ACNPZ 160	63 - 160		Contact Terasaki
Electronic Protection Codes: *AC - LSI and Modbus Communication* *P - Preferential Trip Alarm* *Z - Zone Interlock* *N - Neutral Protection*	*AC 250*	100 - 250	Contact Terasaki	Contact Terasaki
	ACN 250	100 - 250		Contact Terasaki
	ACPZ 250	100 - 250	Contact Terasaki	Contact Terasaki
	ACNPZ 250	100 - 250		Contact Terasaki

TB2 S/H/L 250 FRAME

MCCBs with Icu = 70kA at 690V AC

Model	I_R (A)	3P	
L125-PJ 690V AC I_{cu} = 70kA Front Connection (FC)	16 - 25	4547560	268090
	25 - 40	4547560	268106
	40 - 63	4547560	268113
	50 - 80	4547560	268120
	63 - 100	4547560	268137
	80 - 125	4547560	268114

ORDER CODES

TB2 S250 AND S/H/L 250 FRAME

Accessories

Auxiliary Switches (AX) General Purpose

Field Fit Accessory	Code	
Changeover	4547560	000348
Changeover for low currents (mA)	4547560	000324
Early make switch	4547560	710513

Auxiliary Switches (AX) Heavy Duty

Field Fit Accessory	Code	
Normally open	4547560	000300
Normally closed	4547560	000317

Alarm Switches (AL) General Purpose

Field Fit Accessory	Code	
Changeover	4547560	000744
Changeover for low currents (mA)	4547560	000720

Alarm Switches (AL) Heavy Duty

Field Fit Accessory	Code	
Normally open	4547560	000706
Normally closed	4547560	000713

Shunt Trips (SHT)

Field Fit Accessory - Not compatible with CBR	Code	
AC 100-120V	4547560	000904
AC 200-240V	4547560	000911
AC 380-450V	4547560	000928
DC 12V	4547560	000973
DC 24V	4547560	000935
DC 48V	4547560	000942
DC 100-120V	4547560	000959
DC 200-240V	4547560	000966

TB2 S250 AND S/H/L 250 FRAME

Accessories

Undervoltage Trips (UVT)

Field Fit Accessory - Not compatible with CBR	Code	
AC 100-120V	4547560	001208
AC 200-240V	4547560	001215
AC 380-450V	4547560	001222
DC 24V	4547560	001239
DC 100-120V	4547560	001246
DC 200-240V	4547560	001253
AC 100-110V Time-delay	4547560	001307
AC 115-120V Time-delay	4547560	001307
AC 200-220V Time-delay	4547560	001314
AC 230-240V Time-delay	4547560	001376
AC 380-415V Time-delay	4547560	001321
AC 440-450V Time-delay	4547560	001383
DC 24V Time-delay Version	4547560	001338
DC 100-110V Time-delay	4547560	001345
DC 115-120V Time-delay	4547560	001390
DC 200-220V Time-delay	4547560	001352
DC 230-240V Time-delay	4547560	001406

Extension Bars (FB)

Field Fit Accessory	Code	
3 bars (offset)	4547560	010149
3 bars (straight)	4547560	010408
4 bars (straight)	4547560	010163

Rear Connections (RC)

Field Fit Accessory	Code	
3 studs for thermal magnetic E and S types	4547560	081309
4 studs for thermal magnetic E and S types	4547560	081316
3 studs for H and L types and electronic S types	4547560	081323
4 studs for H and L types and electronic S types	4547560	081330

ORDER CODES

TB2 S250 AND S/H/L 250 FRAMES

Accessories

Fixed Part of Plug-in MCCB (PM)

Field Fit Accessory - not compatible with CBR	Code	
3P	4547560	012365
4P	4547560	012464

Plug-in Conversion for MCCB

Field Fit Accessory - not compatible with CBR or MCCBs for 1000V AC	Code	
3P for thermal magnetic E and S types	4547560	800023
4P for thermal magnetic E and S types	4547560	800030
3P for H and L types (250A) and electronic S types	4547560	800184
4P for H and L types (250A) and electronic S types	4547560	800191

Extension Terminal for Fixed Part of Plug-in MCCB (PF)

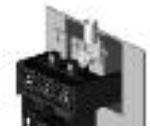

Field Fit Accessory	Code	
3 Bars	4547560	045837
4 Bars	4547560	045844

*Bars suitable for plug-in base only

Terminal Covers for Extension Terminals for Fixed Part of Plug-in MCCB

Field Fit Accessory	Code	
3P 250A Plug-in Base, 1 Terminal Cover	4547560	045721
4P 250A Plug-in Base, 1 Terminal Cover	4547560	045738

Control Wiring Terminals for Plug-in MCCBs

Field Fit Accessory	Code	
Plug for auxiliary switches and alarm switches	4547560	800108
Plug shunt trips and undervoltage trips	4547560	800115

Order one plug for each internal accessory

Control Wiring Terminals for Plug-in MCCBs

Field Fit Accessory	Code	
Socket for Aux/Alarm/UVT/SHT	4547560	045004

Order one socket for each internal accessory

TB2 S250 AND S/H/L 250 FRAMES

Accessories

Cable Clamps (FW)

Field Fit Accessory	Code	
3 clamps for S160, H160, L160, S250, H250, L250	4547560	081354
4 clamps for S160, H160, L160, S250, H250, L250	4547560	081361
3 clamps for H125, L125	4547560	080746
4 clamps for H125, L125	4547560	080753

Motor Operation (MC)

Field Fit Accessory	Code	
100V to 110V AC	4547560	755705
200V to 220V AC	4547560	755712
230V to 240V AC	4547560	755729
24V DC	4547560	755736
48V DC	4547560	755743
100V DC	4547560	755750
220V to 220V DC	4547560	755767

Motor Operation (MC) with Automatic Reset

Field Fit Accessory	Code	
100V to 110V AC	4547560	755972
200V to 220V AC	4547560	755989
230V to 240V AC	4547560	755996
24V DC	4547560	755774
48V DC	4547560	755781
100V DC	4547560	755798
220V to 220V DC	4547560	755590

ORDER CODES

TB2 S250 AND S/H/L 250 FRAMES

Accessories

External Operating Handles (Breaker Mounted Type) (HB)

Field Fit Accessory	Code	
Black handle IP3X	4547560	726347
Black handle IP3X with keylock	4547560	726323
Red handle IP3X	4547560	726828
Red handle IP3X with keylock	4547560	726804
Black handle IP5X	4547560	726354
Black handle IP5X with keylock	4547560	726330
Red handle IP5X	4547560	726835
Red handle IP5X with keylock	4547560	726811

External Operating Handles (Breaker Mounted Type) (S Type)

Field Fit Accessory	Code	
'S Type' Black handle IP55 for 250AF	4547560	060687
'S Type' Red handle IP55 for 250AF	4547560	060694
'S Type' Black Handle IP65	4547560	060724
'S Type' Red Handle IP65	4547560	060731
Castell Cam for K Style Lock	4547560	800634

Slide Type Mechanical Interlocks (MS)

Field Fit Accessory - Not compatible with CBR	Code	
E,S thermal magnetic types for front, rear connection 250AF 3P	4547560	033605
E,S thermal magnetic types for front, rear connection type 250AF 4P	4547560	033612
E,S type for thermal magnetic plug-in type 250AF 3P	4547560	033629
E,S type for plug-in type 250AF 4P	4547560	033636
H,L type for front, rear connection type 250AF 3P and electronic S types	4547560	033643
H,L type for front, rear connection type 250AF 4P and electronic S types	4547560	033650
H,L type for plug-in type 250AF 3P and electronic S types	4547560	033667
H,L type for plug-in type 250AF 4P and electronic S types	4547560	033674

Order one part between two MCCBs

Link Type Mechanical Interlocks (ML)

Field Fit Accessory - Not compatible with CBR	Code	
Right side	4547560	035104
Left side 3P	4547560	035111
Left side 4P	4547560	035128

Order one part for each MCCB

TB2 S250 AND S/H/L 250 FRAMES

Accessories

Wire Type Mechanical Interlocks (MW)

Field Fit Accessory - Not compatible with CBR	Code	
Interlock Mechanical	4547560	036125
1m length interlock cable	4547560	036064
1.5m length interlock cable	4547560	036057

Order one interlock part for each MCCB and one cable between two MCCBs

Handle Locks (HL)

Field Fit Accessory	Code	
For 125 / 250AF	4547560	037016

Terminal Covers for Front Connection

Field Fit Accessory	Code	
3P, 1 cover for thermal magnetic E and S types	4547560	080456
4P, 1 cover for thermal magnetic E and S types	4547560	080463
3P, 1 cover for H and L types and electronic S types	4547560	080654
4P, 1 cover for H and L types and electronic S types	4547560	080661
Terminal cover lock	4547560	038006

Terminal Covers for Rear and Plug-in Connections

Field Fit Accessory	Code	
3P, 1 cover	4547560	080517
4P, 1 cover	4547560	080524
Terminal cover lock	4547560	038006

Terminal Covers for Cable Clamps (CS)

Field Fit Accessory	Code	
3P, 1 cover	4547560	080586
4P, 1 cover	4547560	080593
Terminal cover lock	4547560	038006

ORDER CODES

TB2 S250 AND S/H/L 250 FRAMES

Accessories

Interpole Barriers (BA)

Field Fit Accessory	Code	
For thermal magnetic E and S types	4547560	043161
For H and L types and electronic S types	4547560	043260

Lead Terminal Block

Field Fit Accessory	Code	
Left side	4547560	044526
Right side	4547560	044533

DIN Rail Adapter

Field Fit Accessory	Code	
DIN rail adapter for 125A & 250A	4547560	045127

Neutral Link Shroud

Field Fit Accessory	Code	
250A Neutral Link	4547560	800498
125/250A Neutral Link Shroud	4547560	800559

Door Flange

Field Fit Accessory	Code	
For toggle operation	4547560	044908
For motorised operation	4547560	044915

TB2 S250 AND S/H/L 250 FRAMES

Accessories

OCR Checker

Field Fit Accessory	Code	
OCR Checker 100-120V AC	4547560	756306
OCR checker 200-240V AC	4547560	756313

OCR Sealing Facility

Field Fit Accessory	Code	
OCR sealing cover (thermal/mag)	4547560	055522
OCR sealing cover (electronic)	4547560	055539

Terminal Temperature Monitor and Alarm

Field Fit Accessory	Code	
Temperature Monitor for 3P S250 and S/H/L 250 Frames	4547560	Contact Terasaki
Temperature Monitor for 4P S250 and S/H/L 250 Frames	4547560	Contact Terasaki

Circuit Breaker Monitor

Field Fit Accessory	Code	
Electronic display for MCCBs with Measurements and communication facility (24V DC)	4547560	731907

ORDER CODES

TB2 S250 AND S/H/L 250 FRAMES

Automatic Changeover Pairs

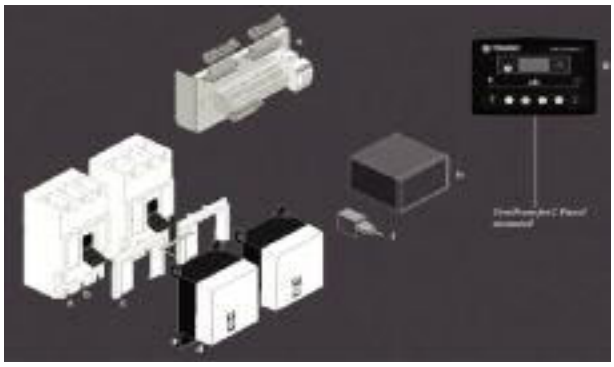

We offer a range of accessories which allow our customers to produce automatic changeover systems using our circuit breakers.

Wiring between the components is the customers responsibility, but can be easily completed by following the Terasaki Wiring Diagram, available on request.

Order codes for the necessary components are shown in the table below:

250A Frame		Code	Function
a.	Two TemBreak 2 MCCbs, TB2 S250 or TB2 S/H/L	Refer to MCCB order codes	Switching and protection of the load.
b.	2 x Auxillary switch for mains MCCB 2 x Auxillary switch for generator MCCB Alarm switch for main MCCB Alarm switch for generator MCCB	2 x 000348 2 x 000348 000744 000744	Electrical interlocking and MCCB status.
c or	Link type mechanical interlock (left) Link type mechanical interlock (right) Link type mechanical interlock (left, 4P)	035014* 035111* 0351289*	Mechanical interlocking. Cable-type mechanical interlocking may alternatively be used.
d.	Motor operator for mains MCCB	Refer to “Motor Operator” Select code base on required voltage.	Automatic operation of circuit breaker.
	Motor operator for generator MCCB	Refer to “Motor Operator” Select code base on required voltage.	
e.	TemTransfer 2 Wiring Panel	304001006	Simplifies customer wiring. Terminal blocks and control relay are included. Only suitable when using Terasaki Wiring Diagram.
f.	TemTransfer 2 Reset Key Switch	304001005	Resets and isolates the system for maintenance. Only suitable when using Terasaki Wiring Diagram.
g.	TemTransfer 2 Automatic Changeover Controller	304001001	Monitors mains and generator voltages and controls transfer of load. Pre-configured to operate with Terasaki Wiring Diagram.
h.	TemTransfer 2 Power Supply 24V DC	304001003	Power Supply for TemTransfer 2. Also available in 12V DC.
	TemTransfer 2 Interface Kit (optional)	304001002	Optional: Allows re-configuration of TemTransfer 2, diagnostics and advanced parameter settings.

*Not available for CBR’s

TB2 H/L 400 FRAME

Electronic MCCBs

Model	Protection Codes	I_R (A)	3P		4P	
H400-NE Icu = 125 kA @ 400V AC Front Connection (FC)	A	100 - 250	4547560	364907	4547560	364921
	AN	100 - 250			4547560	372810
	AP	100 - 250	4547560	364945	4547560	372803
	APN	100 - 250			4547560	372827
	A	160 - 400	4547560	364914	4547560	364938
	AG	160 - 400	4547560	364983*	4547560	
Electronic Protection Codes: *A - LSI* *P - Pre-trip alarm* *G - Ground fault trip* *N - N-phase protection* *S - Phase rotation protection* *C - Communication function* *W - Electrical energy pulse* *H - Harmonic current*	AN	160 - 400			4547560	372865
	AP	160 - 400	4547560	364976	4547560	372858
	AGN	160 - 400			4547560	372889
	APG	160 - 400	4547560	364990*		
	APN	160 - 400			4547560	372872
	APGN	160 - 400			4547560	372896

*An external neutral CT must be ordered. Refer to External Accessories.

Model	Protection Codes	I_R (A)	3P		4P	
L400-NE Icu = 200 kA @ 400V AC Front Connection (FC)	A	100 - 250	4547560	365003	4547560	365027
	AN	100 - 250			4547560	372919
	AP	100 - 250	4547560	365041	4547560	372902
	APN	100 - 250			4547560	372926
	A	160 - 400	4547560	365010	4547560	365034
	AG	160 - 400	4547560	365089*		
Electronic Protection Codes: *A - LSI* *P - Pre-trip alarm* *G - Ground fault trip* *N - N-phase protection* *S - Phase rotation protection* *C - Communication function* *W - Electrical energy pulse* *H - Harmonic current*	AN	160 - 400			4547560	372964
	AP	160 - 400	4547560	365072	4547560	372957
	AGN	160 - 400			4547560	372988
	APG	160 - 400	4547560	365096*		
	APN	160 - 400			4547560	372971
	APGN	160 - 400			4547560	372995

ORDER CODES

TB2 H/L 400 FRAME

MCCBs with Measurement and Data Communication

Model	Protection Codes	I_R (A)	3P		4P	
H400-NE Icu = 125 kA @ 400V AC Front Connection (FC)	A	100 - 250	4547560	393549	4547560	393785
	AG	100 - 250	4547560	393556*		
	AGN	100 - 250			4547560	393792
	APGS	100 - 250	4547560	393570*		
	APGNS	100 - 250			4547560	393815
	APGSCWH	100 - 250	4547560	393594*		
	APGNSCWH	100 - 250			4547560	393839
Electronic Protection Codes: *A - LSI* *P - Pre-trip alarm* *G - Ground fault trip* *N - N-phase protection* *S - Phase rotation protection* *C - Communication function* *W - Electrical energy pulse* *H - Harmonic current*	A	160 - 400	4547560	393662	4547560	393907
	AG	160 - 400	4547560	393679*		
	AGN	160 - 400			4547560	393914
	APGS	160 - 400	4547560	393693*		
	APGNS	160 - 400			4547560	393938
	APGSCWH	160 - 400	4547560	393716*		
	APGNSCWH	160 - 400			4547560	393952

*An external neutral CT must be ordered for ground fault trip function.

Model	Protection Codes	I_R (A)	3P		4P	
L400-NE Icu = 200 kA @ 400V AC Front Connection (FC)	A	100 - 250	4547560	395468	4547560	395703
	AG	100 - 250	4547560	395475*		
	AGN	100 - 250			4547560	395170
	APGS	100 - 250	4547560	395499*		
	APGNS	100 - 250			4547560	395734
	APGSCWH	100 - 250	4547560	395512*		
	APGNSCWH	100 - 250			4547560	395758
Electronic Protection Codes: *A - LSI* *P - Pre-trip alarm* *G - Ground fault trip* *N - N-phase protection* *S - Phase rotation protection* *C - Communication function* *W - Electrical energy pulse* *H - Harmonic current*	A	160 - 400	4547560	395581	4547560	395826
	AG	160 - 400	4547560	395598*		
	AGN	160 - 400			4547560	395833
	APGS	160 - 400	4547560	395611*		
	APGNS	160 - 400			4547560	395857
	APGSCWH	160 - 400	4547560	395635*		
	APGNSCWH	160 - 400			4547560	395871

*An external neutral CT must be ordered. Refer to External Accessories.

TB2 H/L 400 FRAME

MCCBs with Icu = 70kA at 690V DC

Model	Protection Codes	I_R (A)	3P	
L400-PE 690V AC *I*cu = 70kA Front Connections *A - LSI* *P - Pre-trip alarm* *G - Ground fault trip* *APG - Pre-Trip & Ground Fault*	A	100 - 250	4547560	365003
	A	160 - 400	4547560	365010

Circuit Breakers and Switch Disconnectors for use Above 250V DC

Model	I_R (A)	4P	
PVS400-NDL 750V DC Icu = 10kA Front Connection (FC)	250	4547560	400902
	400	4547560	400919

Connect 4 poles in series.

Model	I_R (A)	4P	
PVS400-NDH 1000V DC *I*cu = 5kA Front Connection (FC)	250	4547560	400926
	400	4547560	400933

Connect 4 poles in series.

Model	I_n (A)	4P	
PVS400-NNL 800V DC Front Connection (FC)	400	4547560	400940

Connect 4 poles in series.

Model	I_n (A)	4P	
PVS400-NNH 800V DC Front Connection (FC)	400	4547560	400957

Connect 4 poles in series.

ORDER CODES

TB2 E/S 630 FRAME

Adjustable Thermal and Adjustable Magnetic MCCBs

Model	I_R (A)	3P		4P	
E400-NJ *I*cu = 25kA @ 400V AC Front Connection (FC)	158 - 250	4547560	378522	4547560	378560
	252 - 400	4547560	378539	4547560	378577

Model	I_R (A)	3P		4P	
S400-CJ *I*cu = 36 kA @ 400V AC Front Connection (FC)	158 - 250	4547560	381423	4547560	378645
	252 - 400	4547560	381430	4547560	378652

Model	I_R (A)	3P		4P	
S400-NJ *I*cu = 50 kA @ 400V AC Front Connection (FC)	158 - 250	4547560	378720	4547560	378843
	252 - 400	4547560	378737	4547560	378850

Model	I_R (A)	3P		4P	
S400-GJ *I*cu = 70 kA @ 400V AC Front Connection (FC)	158 - 250	4547560	378928	4547560	379048
	252 - 400	4547560	378935	4547560	379055

Model	I_R (A)	3P		4P	
S400-PJ *I*cu = 85 kA @ 400V AC Front Connection (FC)	158 - 250	4547560	378003	4547560	378065
	252 - 400	4547560	378010	4547560	378072

TB2 E/S 630 FRAME

MCCBs with Magnetic Trip Only

Model	I_R (A)	3P	
E400-NJ *I*cu = 25kA @ 400V AC Front Connection (FC)	158 - 250	4547560	380747
	252 - 400	4547560	380754

Model	I_R (A)	3P		4P	
S400-CJ *I*cu = 36 kA @ 400V AC Front Connection (FC)	158 - 250	4547560	380907	4547560	380921
	252 - 400	4547560	380914	4547560	380938

Model	I_R (A)	3P		4P	
S400-NJ *I*cu = 50 kA @ 400V AC Front Connection (FC)	158 - 250	4547560	381102	4547560	381126
	252 - 400	4547560	381119	4547560	381133

Model	I_R (A)	3P		4P	
S400-GJ *I*cu = 70 kA @ 400V AC Front Connection (FC)	158 - 250	4547560	381300	4547560	381324
	252 - 400	4547560	381317	4547560	381331

ORDER CODES

TB2 E/S 630 FRAME

MCCBs with Adjustable Thermal and Fixed Low Instantaneous Trip: For generators

Model	I_R (A)	3P		4P	
E400-NJ *I*cu = 25kA @ 400V AC Front Connection (FC)	252 - 400	4547560	383120	4547560	383137

Model	I_R (A)	3P		4P	
S400-CJ *I*cu = 36 kA @ 400V AC Front Connection (FC)	252 - 400	4547560	383175	4547560	383182

Model	I_R (A)	3P		4P	
S400-NJ *I*cu = 50 kA @ 400V AC Front Connection (FC)	252 - 400	4547560	383236	4547560	383243

Model	I_R (A)	3P		4P	
S400-GJ *I*cu = 65 kA @ 400V AC Front Connection (FC)	252 - 400	4547560	383335	4547560	383342

TB2 E/S 630 FRAME

Electronic MCCBs

Model	Protection Codes	I_R (A))	3P		4P	
S400-NE Icu = 50kA @ 400V AC Front Connection (FC)	*A*	100 - 250	4547560	379604	4547560	379703
	AN	100 - 250			4547560	379727
	AP	100 - 250	4547560	379611	4547560	379710
	APN	100 - 250			4547560	379734
	A	160 - 400	4547560	379628	4547560	379741
	AG	160 - 400	4547560	379642*		
	AN	160 - 400			4547560	379765
	AP	160 - 400	4547560	379635	4547560	379758
Electronic Protection Codes: *A - Standard relay with LSI characteristic* *P - Preferential Trip Alarm* *G - Ground Fault* *N - Neutral Protection*	*AGN*	160 - 400			4547560	379789
	APG	160 - 400	4547560	379659*		
	APN	160 - 400			4547560	379772
	APGN	160 - 400			4547560	379796

*An external neutral CT must be ordered. Refer to External Accessories.

Model	Protection Codes	I_R (A)	3P		4P	
S400-GE Icu = 70kA @ 400V AC Front Connection (FC)	*A*	100 - 250	4547560	379802	4547560	379901
	AN	100 - 250			4547560	379925
	AP	100 - 250	4547560	379819	4547560	379918
	APN	100 - 250			4547560	379932
	A	160 - 400	4547560	379826	4547560	379949
	AG	160 - 400	4547560	379840*		
	AN	160 - 400			4547560	379963
	AP	160 - 400	4547560	379833	4547560	379956
Electronic Protection Codes: *A - Standard relay with LSI characteristic* *P - Preferential Trip Alarm* *G - Ground Fault* *N - Neutral Protection*	*AGN*	160 - 400			4547560	379987
	APG	160 - 400	4547560	379857*		
	APN	160 - 400			4547560	379970
	APGN	160 - 400			4547560	379994

*An external neutral CT must be ordered. Refer to External Accessories.

ORDER CODES

TB2 E/S 630 FRAME

Electronic MCCBs

Model	Protection Codes	I_R (A)	3P		4P	
S400-PE Icu = 80kA @ 400V AC Front Connection (FC)	A	100 - 250	4547560	378300	4547560	378362
	AN	100 - 250			4547560	378386
	AP	100 - 250	4547560	378317	4547560	378379
	APN	100 - 250			4547560	378393
	A	160 - 400	4547560	378324	4547560	378409
	AG	160 - 400	4547560	368348*		
	AN	160 - 400			4547560	378423
	AP	160 - 400	4547560	368331	4547560	378416
Electronic Protection Codes:	AGN	160 - 400			4547560	378447
A - Standard relay with LSI characteristic	APG	160 - 400	4547560	378355*		
P - Preferential Trip Alarm	APN	160 - 400			4547560	378430
G - Ground Fault *N - Neutral Protection*	APGN	160 - 400			4547560	378454

*An external neutral CT must be ordered. Refer to External Accessories.

Model	Protection Codes	I_R (A)	3P		4P	
E630-NE Icu = 36 kA @ 400V AC Front Connection (FC)	A	250 - 630	4547560	380204	4547560	380242
	AG	250 - 630	4547560	380228*		
	AN	250 - 630			4547560	380266
	AP	250 - 630	4547560	380211	4547560	380259
Electronic Protection Codes:	AGN	250 - 630			4547560	380280
A - Standard relay with LSI characteristic	APG	250 - 630	4547560	380235*		
P - Preferential Trip Alarm	APN	250 - 630			4547560	380273
G - Ground Fault *N - Neutral Protection*	APGN	250 - 630			4547560	380297

*An external neutral CT must be ordered. Refer to External Accessories.

Model	Protection Codes	I_R (A)	3P		4P	
S630-CE Icu = 50 kA @ 400V AC Front Connection (FC)	A	250 - 630	4547560	380303	4547560	380341
	AG	250 - 630	4547560	380327*		
	AN	250 - 630			4547560	380365
	AP	250 - 630	4547560	380310	4547560	380358
Electronic Protection Codes:	AGN	250 - 630			4547560	380389
A - Standard relay with LSI characteristic	APG	250 - 630	4547560	380334*		
P - Preferential Trip Alarm	APN	250 - 630			4547560	380372
G - Ground Fault *N - Neutral Protection*	APGN	250 - 630			4547560	380396

*An external neutral CT must be ordered. Refer to External Accessories.

TB2 E/S 630 FRAME

Electronic MCCBs

Model	Protection Codes	I_R (A)	3P		4P	
S630-GE *I*cu = 70 kA @ 400V AC Front Connection (FC)	*A*	250 - 630	4547560	380402	4547560	380440
	AG	250 - 630	4547560	380426*		
	AN	250 - 630			4547560	380464
	AP	250 - 630	4547560	380419	4547560	380457
	AGN	250 - 630			4547560	380488
Electronic Protection Codes: *A - Standard relay with LSI characteristic* *P - Preferential Trip Alarm* *G - Ground Fault* *N - Neutral Protection*	*APG*	250 - 630	4547560	380433*		
	APN	250 - 630			4547560	380471
	APGN	250 - 630			4547560	380495

*An external neutral CT must be ordered. Refer to External Accessories.

MCCBs with Measurement and Data Communication

Model	Protection Codes	I_R (A)	3P		4P	
S400-NE *I*cu = 50 kA @ 400V AC Front Connection (FC)	*A*	100 - 250	4547560	390661	4547560	390906
	AG	100 - 250	4547560	390678*		
	AGN	100 - 250			4547560	390913
	APGS	100 - 250	4547560	390692*		
	APGNS	100 - 250			4547560	390937
	APGSCWH	100 - 250	4547560	390715*		
	APGNSCWH	100 - 250			4547560	390951
	A	160 - 400	4547560	390784	4547560	391026
Electronic Protection Codes: *A - LSI* *P - Pre-trip alarm* *G - Ground fault trip* *N - N-phase protection* *S - Phase rotation protection* *C - Communication function* *W - Electrical energy pulse* *H - Harmonic current*	*AG*	160 - 400	4547560	390791*		
	AGN	160 - 400			4547560	391033
	APGS	160 - 400	4547560	390814*		
	APGNS	160 - 400			4547560	391057
	APGSCWH	160 - 400	4547560	390838*		
	APGNSCWH	160 - 400			4547560	391071

*An external neutral CT must be ordered. Refer to External Accessories.

ORDER CODES

TB2 E/S 630 FRAME

MCCBs with Measurement and Data Communication

Model	Protection Codes	I_R (A)	3P		4P	
S400-GE *Icu* = 70 kA @ 400V AC Front Connection (FC)	*A*	100 - 250	4547560	391620	4547560	391866
	AG	100 - 250	4547560	391637*		
	AGN	100 - 250			4547560	391873
	APGS	100 - 250	4547560	391651*		
	APGNS	100 - 250			4547560	391897
	APGSCWH	100 - 250	4547560	4547560		
	APGNSCWH	100 - 250			4547560	391910
	A	160 - 400	4547560	391743	4547560	391989
Electronic Protection Codes: *A - LSI* *P - Pre-trip alarm* *G - Ground fault trip* *N - N-phase protection* *S - Phase rotation protection* *C - Communication function* *W - Electrical energy pulse* *H - Harmonic current*	*AG*	160 - 400	4547560	391750*		
	AGN	160 - 400			4547560	391996
	APGS	160 - 400	4547560	391774*		
	APGNS	160 - 400			4547560	392016
	APGSCWH	160 - 400	4547560	391798*		
	APGNSCWH	160 - 400			4547560	392030

*An external neutral CT must be ordered. Refer to External Accessories.

Model	Protection Codes	I_R (A)	3P		4P	
S400-PE *Icu* = 85 kA @ 400V AC Front Connection (FC)	*A*	100 - 250	4547560	392580	4547560	392825
	AG	100 - 250	4547560	392597*		
	AGN	100 - 250			4547560	392832
	AP	100 - 250	4547560	392603	4547560	392849
	APGS	100 - 250	4547560	392610*		
	APGNS	100 - 250			4547560	392856
	APGSCWH	100 - 250	4547560	392634*		
	APGNSCWH	100 - 250			4547560	392870
	A	160 - 400	4547560	392702	4547560	392948
Electronic Protection Codes: *A - LSI* *P - Pre-trip alarm* *G - Ground fault trip* *N - N-phase protection* *S - Phase rotation protection* *C - Communication function* *W - Electrical energy pulse* *H - Harmonic current*	*AG*	160 - 400	4547560	392719*		
	AGN	160 - 400			4547560	392955
	AP	160 - 400	4547560	392726	4547560	392962
	APGNS	160 - 400			4547560	392979
	APGSCWH	160 - 400	4547560	392757		
	APGSCWH	160 - 400			4547560	392993

*An external neutral CT must be ordered. Refer to External Accessories.

TB2 E/S 630 FRAME

MCCBs with Measurement and Data Communication

Model	Protection Codes	I_R (A)	3P		4P	
E630-NE Icu = 36 kA @ 400V AC Front Connection (FC)	A	250 - 630	4547560	397462	4547560	397585
	AG	250 - 630	4547560	397479*		
Electronic Protection Codes: *A - LSI* *P - Pre-trip alarm* *G - Ground fault trip* *N - N-phase protection* *S - Phase rotation protection* *C - Communication function* *W - Electrical energy pulse* *H - Harmonic current*	AGN	250 - 630			4547560	397592
	APGS	250 - 630	4547560	397493*		
	APGNS	250 - 630			4547560	397615
	APGSCWH	250 - 630	4547560	397516*		
	APGNSCWH	250 - 630			4547560	397639

*An external neutral CT must be ordered. Refer to External Accessories.

Model	Protection Codes	I_R (A)	3P		4P	
S630-CE Icu = 50 kA @ 400V AC Front Connection (FC)	A	250 - 630	4547560	397967	4547560	398087
	AG	250 - 630	4547560	397974*		
Electronic Protection Codes: *A - LSI* *P - Pre-trip alarm* *G - Ground fault trip* *N - N-phase protection* *S - Phase rotation protection* *C - Communication function* *W - Electrical energy pulse* *H - Harmonic current*	AGN	250 - 630			4547560	398094
	APGS	250 - 630	4547560	397998*		
	APGNS	250 - 630			4547560	398117
	APGSCWH	250 - 630	4547560	398018*		
	APGNSCWH	250 - 630			4547560	398131

*An external neutral CT must be ordered. Refer to External Accessories.

Model	Protection Codes	I_R (A)	3P		4P	
S630-GE Icu = 70 kA @ 400V AC Front Connection (FC)	A	250 - 630	4547560	398469	4547560	398582
	AG	250 - 630	4547560	398476*		
Electronic Protection Codes: *A - LSI* *P - Pre-trip alarm* *G - Ground fault trip* *N - N-phase protection* *S - Phase rotation protection* *C - Communication function* *W - Electrical energy pulse* *H - Harmonic current*	AGN	250 - 630			4547560	398599
	APGS	250 - 630	4547560	398490*		
	APGNS	250 - 630			4547560	398612
	APGSCWH	250 - 630	4547560	398513*		
	APGNSCWH	250 - 630			4547560	398636

ORDER CODES

TB2 E/S 630 FRAME

Circuit Breakers and Switch Disconnectors for Use Above 250V DC

Model	I_R (A)	3P	
S400-ND 350V DC *I*cu = 20kA Front Connection (FC)	250	4547560	399008
	400	4547560	399015

Poles wired in series.

Model	I_R (A)	3P	
S400-ND 600V DC *I*cu = 15kA Front Connection (FC)	250	4547560	399046
	400	4547560	399053

Poles wired in series.

Switch Disconnectors

Model	I_n (A)	3P		4P	
S400-NN Front Connection (FC)	400	4547560	381553	4547560	381557

Model	I_n (A)	3P		4P	
S630-NN Front Connection (FC)	630	4547560	381607	4547560	381621

TB2 2 H/L 400 AND E/S 630 FRAMES

Accessories

Auxiliary Switches (AX) General Purpose

Field Fit Accessory	Code	
Changeover	4547560	000348
Changeover for low currents (mA)	4547560	000324

Auxiliary Switches (AX) Heavy Duty

Field Fit Accessory	Code	
Normally open	4547560	000300
Normally closed	4547560	000317

Alarm Switches (AL) General Purpose

Field Fit Accessory	Code	
Changeover	4547560	000744
Changeover for low currents (mA)	4547560	000720

Alarm Switches (AL) Heavy Duty

Field Fit Accessory	Code	
Normally open	4547560	000706
Normally closed	4547560	000713

Shunt Trips (SHT)

Field Fit Accessory	Code	
AC 100-120V	4547560	000904
AC 200-240V	4547560	000911
AC 380-450V	4547560	000928
DC 12V	4547560	000973
DC 24V	4547560	000935
DC 48V	4547560	000942
DC 100-120V	4547560	000959
DC 200-240V	4547560	000966

ORDER CODES

TB2 2 H/L 400 AND E/S 630 FRAMES

Accessories

Undervoltage Trips (UVT)

Field Fit Accessory	Code	
AC 100-120V	4547560	001208
AC 200-240V	4547560	001215
AC 380-450V	4547560	001222
DC 24V	4547560	001239
DC 100-120V	4547560	001246
DC 200-240V	4547560	001253
AC 100-110V Time-delay (3P)	4547560	001307
AC 115-120V Time-delay (3P)	4547560	001369
AC 200-220V Time-delay (3P)	4547560	001314
AC 230-240V Time-delay (3P)	4547560	001376
AC 380-415V Time-delay (3P)	4547560	001321
AC 440-450V Time-delay (3P)	4547560	001383
DC 24V Time-delay Version (3P)	4547560	001338
DC 100-110V Time-delay (3P)	4547560	001345
DC 115-120V Time-delay (3P)	4547560	001390
DC 200-220V Time-delay (3P)	4547560	001352
DC 230-240V Time-delay (3P)	4547560	001406
AC 100-110V Time-delay for 4 Pole only	4547560	002014
AC 115-120V Time-delay for 4 Pole only	4547560	002076
AC 200-220V Time-delay for 4 Pole only	4547560	002021
AC 230-240V Time-delay for 4 Pole only	4547560	002083
AC 380-415V Time-delay for 4 Pole only	4547560	002038
AC 440-450V Time-delay for 4 Pole only	4547560	002090
DC 24V Time-delay for 4 Pole only	4547560	002045
DC 100-110V Time-delay for 4 Pole only	4547560	002052
DC 115-120V Time-delay for 4 Pole only	4547560	002106
DC 200-220V Time-delay for 4 Pole only	4547560	002069
DC 230-240V Time-delay for 4 Pole only	4547560	002113

TB2 2 H/L 400 AND E/S 630 FRAMES

Accessories

Extension Bars (FB)

Straight Type

Offset Type

Field Fit Accessory	Code	
3 bars, 400A (Offset)	4547560	010323
3 bars, 400A (Straight)	4547560	010415
4 bars, 400A (Offset)	4547560	010330
4 bars, 400A (Straight)	4547560	010422
3 bars, 630A (Offset)	4547560	010347
3 bars, 630A (Straight)	4547560	010439
4 bars, 630A (Offset)	4547560	010354
4 bars, 630A (Straight)	4547560	010446

Rear Connections (RC) for E/S 630A Frame

Field Fit Accessory	Code	
3 studs, 400A	4547560	080210
4 studs, 400A	4547560	080227
3 studs, 630A	4547560	080265
4 studs, 630A	4547560	080272

Rear Connections (RC) for H/L 400A Frame

Factory Fit Accessory	Code	
3 studs, 400A	4547560	080241
3 studs, 400A	4547560	080258

Fixed Part of Plug-in MCCB (PM)

Field Fit Accessory	Code	
3P	4547560	012563
4P	4547560	012662

A plug-in conversion is also required to complete the plug-in MCCB

ORDER CODES

TEMBREAK 2 H/L 400A AND E/S 630A FRAME

Accessories

Plug-in Conversion for E/S 630A Frame

Field Fit Accessory	Code	
3P, 400A	4547560	800047
4P, 400A	4547560	800054
3P, 630A	4547560	800085
4P, 630A	4547560	800092

Plug-in Conversion for H/L 400A Frame)

Factory Fit Accessory except for L400-PE	Code
Contact Terasaki	Contact Terasaki

Extension Terminal for Fixed Part of Plug-in MCCB (PF)

Field Fit Accessory	Code	
3 bars	4547560	045851
4 bars	4547560	045868

Terminal Covers for Extension Terminals for Fixed Parts of Plug-in MCCBs

Field Fit Accessory	Code	
3P 400A Plug-in Base, 1 Terminal Cover	4547560	045745
4P 400A Plug-in Base, 1 Terminal Cover	4547560	045752

Control Wiring Terminals for Plug-in MCCBs

Field Fit Accessory	Code	
Plug for auxiliary switches and alarm switches	4547560	800108
Plug for shunt trips and undervoltage trips	4547560	800115

Order one plug for each internal accessory.

TB2 2 H/L 400 AND E/S 630 FRAMES

Accessories

Control Wiring Terminals for Plug-in MCCBs

Field Fit Accessory	Code	
Socket for aux/al/sht/uvt	4547560	045004

Order one socket for each internal accessory.

Cable Clamps (FW) for E/S 630A Frame

Field Fit Accessory	Code	
3 clamps, 400A	4547560	014734
4 clamps, 400A	4547560	014741

Cable Clamps (FW) for H/L 400A Frame

Field Fit Accessory	Code
Contact Terasaki	Contact Terasaki

Motor Operation (MC)

Field Fit Accessory	Code	
100V to 240V AC for 400-630AF	4547560	756009
24V to 48V DC for 400-630AF	4547560	756016
100V to 120V DC for 400-630AF	4547560	756023

Motor Operation (MC) with Automatic Reset

Field Fit Accessory	Code	
AC 100V to 240V	4547560	756092
DC 24V to 48V	4547560	756108
DC 100V to 120V	4547560	756115

ORDER CODES

TB2 2 H/L 400 AND E/S 630 FRAMES

Accessories

External Operating Handles (Breaker Mounted Type) (HB)

Field Fit Accessory	Code	
Black handle IP3X	4547560	727061
Black handle IP3X with keylock	4547560	727047
Red handle IP3X	4547560	727542
Red handle IP3X with keylock	4547560	727528
Black handle IP5X	4547560	727078
Black handle IP5X with keylock	4547560	727054
Red handle IP5X	4547560	727559
Red handle IP5X with keylock	4547560	727535

External Operating Handles (Panel Mounted Type) (S Type)

Field Fit Accessory	Code	
'S Type' Black handle IP55	4547560	060922
S Type' Red handle IP55	4547560	060939
S Type' Black Handle IP65	4547560	060960
Type' Red Handle IP65	4547560	060977
Castell Cam for K Lock	4547560	800634

Slide Type Mechanical Interlocks (MS)

Field Fit Accessory	Code	
E,S type for front, rear connection type 400-630AF 3P	4547560	033704
E,S type for front, rear connection type 400-630AF 4P	4547560	033711
E,S type for plug-in type 400-630AF 3P	4547560	033728
E,S type for plug-in type 400-630AF 4P	4547560	033735
H,L type for front, rear connection type 400-630AF 3P	4547560	033742
H,L type for front, rear connection type 400-630AF 4P	4547560	033759
H,L type for plug-in type 400-630AF 3P	4547560	033766
H,L type for plug-in type 400-630AF 4P	4547560	033773

Order one part between two MCCBs

Link Type Mechanical Interlocks (ML)

Field Fit Accessory	Code	
Right side	4547560	035265
Left side 3P	4547560	035272
Left side 4P	4547560	035289

Order one interlock part for each MCCB

TB2 2 H/L 400 AND E/S 630 FRAMES

Accessories

Wire Type Mechanical Interlocks (MW)

Field Fit Accessory	Code	
Interlock	4547560	036248
1m length interlock cable	4547560	036064
1.5m length interlock cable	4547560	036057

Order one interlock part for each MCCB and one cable between two MCCBs

Handle Locks (HL)

Field Fit Accessory	Code	
For 400-1000AF	4547560	037306

Terminal Covers for Front Connection (CF)

Field Fit Accessory	Code	
3P, 1 cover (narrow type)	4547560	081002
4P, 1 cover (narrow type)	4547560	081019
3P, 1 cover	4547560	081347
4P, 1 cover	4547560	080814
Terminal cover lock	4547560	038006

Terminal Covers for Rear Connection, Cable Clamps and Plug-In (CR)

Field Fit Accessory	Code	
3P, 1 cover	4547560	080982
4P, 1 cover	4547560	080999
Terminal cover lock	4547560	038006

Interpole Barriers (BA)

Field Fit Accessory	Code	
For E and S types	4547560	043338

ORDER CODES

TB2 2 H/L 400 AND E/S 630 FRAMES

Accessories

Lead Terminal Block

Field Fit Accessory	Code	
Left side	4547560	044540
Right side	4547560	044557

Neutral Link

Field Fit Accessory	Code	
400A Neutral Link	4547560	800504
630A Neutral Link	4547560	800511
400/630 Neutral Link Shroud	4547560	800566

Door Flange

Field Fit Accessory	Code	
For toggle operation	4547560	45400
For motorised application	4547560	45417

TB2 2 H/L 400 AND E/S 630 FRAMES

Accessories

OCR Checker

Field Fit Accessory	Code	
OCR Checker 100-120V AC	4547560	756306
OCR checker 200-240V AC	4547560	756313

External Neutral CT

Field Fit Accessory	Code	
400A	4547560	045912
630A	4547560	045929

Terminal Temperature Monitor and Alarm

Field Fit Accessory	Code
Temperature Monitor for 3P H/L 400 and E/S 630 Frames	Contact Terasaki
Temperature Monitor for 4P H/L 400 and E/S 630 Frames	Contact Terasaki

Circuit Breaker Monitor

Field Fit Accessory	Code	
Circuit Breaker Monitor 24V DC	4547560	731907

ORDER CODES

TB2 2 H/L 400 AND E/S 630 FRAMES

Automatic Changeover Pairs

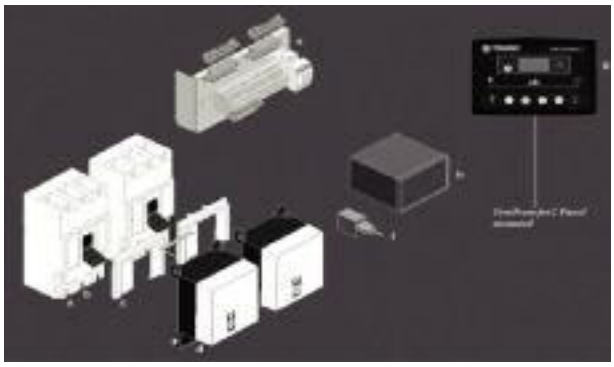

We offer a range of accessories which allow our customers to produce automatic changeover systems using our circuit breakers.

Wiring between the components is the customers responsibility, but can be easily completed by following the Terasaki Wiring Diagram, available on request.

Order codes for the necessary components are shown in the table below:

400A Frame		Code	Function
a.	Two TemBreak 2 MCCBs, H/L 400 or E/S 630 Frames	Refer to MCCB order codes	Switching and protection of the load.
b.	2 x Auxillary switch for mains MCCB 2 x Auxillary switch for generator MCCB Alarm switch for main MCCB Alarm switch for generator MCCB	2 x 000348 2 x 000348 000744 000744	Electrical interlocking and MCCB status.
c or	Link type mechanical interlock (left) Link type mechanical interlock (right) Link type mechanical interlock (left, 4P)	035265 035272 035289	Mechanical interlocking. Cable-type mechanical interlocking may alternatively be used.
d.	Motor operator for mains MCCB	Refer to “Motor Operator” Select code base on required voltage.	Automatic operation of circuit breaker.
	Motor operator for generator MCCB	Refer to “Motor Operator” Select code base on required voltage.	
e.	TemTransfer 2 Wiring Panel	304001006	Simplifies customer wiring. Terminal blocks and control relay are included. Only suitable when using Terasaki Wiring Diagram.
f.	TemTransfer 2 Reset Key Switch	304001005	Resets and isolates the system for maintenance. Only suitable when using Terasaki Wiring Diagram.
g.	TemTransfer 2 Automatic Changeover Controller	304001001	Monitors mains and generator voltages and controls transfer of load. Pre-configured to operate with Terasaki Wiring Diagram.
h.	TemTransfer 2 Power Supply 24V DC	304001003	Power Supply for TemTransfer 2. Also available in 12V DC.
	TemTransfer 2 Interface Kit (optional)	304001002	Optional: Allows re-configuration of TemTransfer 2, diagnostics and advanced parameter settings.

TB2 H/L 800 FRAME

Electronic MCCBs

Model	Protection Codes	I_R (A)	3P		4P	
H800-NE Icu = 125kA with extension bars (mandatory)	A	250 - 630	4547560	482809	4547560	482885
	AN	250 - 630			4547560	482908
	AP	250 - 630	4547560	482816	4547560	482892
	AG	250 - 630		482823*		
	AGN	250 - 630	4547560		4547560	482922
	APG	250 - 630	4547560	482830*		
	APN	250 - 630			4547560	482915
	APGN	250 - 630			4547560	482939
	A	320 - 800	4547560	481406	4547560	481482
	AN	320 - 800			4547560	481505
	AP	320 - 800	4547560	481413	4547560	481499
	AG	320 - 800	4547560	481420*		
Electronic Protection Codes: *A - Standard relay with LSI characteristic* *P - Pre-trip alarm* *G - Ground fault trip* *N - N-phase protection*	AGN	320 - 800			4547560	481529
	APG	320 - 800	4547560	481437*		
	APN	320 - 800			4547560	481512
	APGN	320 - 800			4547560	481536

*An external neutral CT must be ordered. See External Accessories.

Model	Protection Codes	I_R (A)	3P		4P	
L800-NE Icu = 200kA with extension bars (mandatory)	A	250 - 630	4547560	483004	4547560	483080
	AN	250 - 630			4547560	483103
	AP	250 - 630	4547560	483011	4547560	483097
	AG	250 - 630	4547560	483028*		
	AGN	250 - 630			4547560	483127
	APG	250 - 630	4547560	483035		
	APN	250 - 630			4547560	483110
	APGN	250 - 630			4547560	483134
	A	320 - 800	4547560	481604	4547560	481680
	AN	320 - 800			4547560	481703
	AP	320 - 800	4547560	481611	4547560	481697
	AG	320 - 800	4547560	481628*	4547560	
Electronic Protection Codes: *A - Standard relay with LSI characteristic* *P - Pre-trip alarm* *G - Ground fault trip* *N - N-phase protection*	AGN	320 - 800			4547560	481727
	APG	320 - 800	4547560	481635		
	APN	320 - 800			4547560	481710
	APGN	320 - 800			4547560	481734

*An external neutral CT must be ordered. See External Accessories.

ORDER CODES

TB2 H/L 800 FRAME

MCCBs with Measurement and Data Communication

Model	Protection Codes	I_R (A)	3P		4P	
H800-NE *I*cu = 125kA Front Connection (FC) with extension bars (mandatory)	*A*	250 - 630	4547560	489501	4547560	489624
	AG	250 - 630	4547560	489518*		
	AGN	250 - 630			4547560	489631
	AP	250 - 630	4547560	489525	4547560	489648
	APGS	250 - 630	4547560	489532*		
	APGNS	250 - 630			4547560	489655
	APCWH	250 - 630	4547560	489549	4547560	489662
	APGSCWH	250 - 630	4547560	489556*		
	APGNSCWH	250 - 630			4547560	489679
	A	320 - 800	4547560	490224	4547560	490347
	AG	320 - 800	4547560	490231*		
	AGN	320 - 800			4547560	490354
Electronic Protection Codes: *A - LSI* *P - Pre-trip alarm* *G - Ground fault trip* *N - N-phase protection* *S - Phase rotation protection* *C - Communication function* *W - Electrical energy pulse* *H - Harmonic current*	*AP*	320 - 800	4547560	490248	4547560	490361
	APGS	320 - 800	4547560	490255*		
	APGNS	320 - 800			4547560	490378
	APCWH	320 - 800	4547560	490262	4547560	490385
	APGSCWH	320 - 800	4547560	490279*		
	APGNSCWH	320 - 800			4547560	490392

*An external neutral CT must be ordered. See External Accessories.

Model	Protection Codes	I_R (A)	3P		4P	
L800-NE *I*cu = 200kA Front Connection (FC) Front Connection with extension bars (mandatory)	*A*	250 - 630	4547560	490941	4547560	491061
	AG	250 - 630	4547560	490958*		
	AGN	250 - 630			4547560	491078
	AP	250 - 630	4547560	490965	4547560	491085
	APGS	250 - 630	4547560	490972*		
	APGNS	250 - 630			4547560	491092
	APCWH	250 - 630	4547560	490989	4547560	491108
	APGSCWH	250 - 630	4547560	490996		
	APGNSCWH	250 - 630			4547560	491115
	A	320 - 800	4547560	491665	4547560	491788
	AG	320 - 800	4547560	491672*		
	AGN	320 - 800			4547560	491795
Electronic Protection Codes: *A - LSI* *P - Pre-trip alarm* *G - Ground fault trip* *N - N-phase protection* *S - Phase rotation protection* *C - Communication function* *W - Electrical energy pulse* *H - Harmonic current*	*AP*	320 - 800	4547560	491689	4547560	491801
	APGS	320 - 800	4547560	491696*	4547560	
	APGNS	320 - 800			4547560	491818
	APCWH	320 - 800	4547560	491702	4547560	491825
	APGSCWH	320 - 800	4547560	491719*	4547560	
	APGNSCWH	320 - 800			4547560	491832

*An external neutral CT must be ordered. See External Accessories. Extension bars are optional for S800 models.

TB2 H/L 800 FRAME

MCCBs with Icu = 70kA @ 690V AC

Model	Protection Codes	I_R (A)	3P	
L800-PE Icu = 70kA @ 690V AC With Rear Connections	A	250 - 630	4547560	485183
	AP	250 - 630	4547560	485190
	AG	250 - 630	4547560	485206
	APG	250 - 630	4547560	485213
	A	320 - 800	4547560	485268
	AP	320 - 800	4547560	485275
	AG	320 - 800	4547560	485282
	APG	320 - 800	4547560	485299

Model	Protection Codes	I_R (A)	3P	
L800-PE Icu = 70kA @ 690V AC with Plug-in connections	A	250 - 630	4547560	485220
	AP	250 - 630	4547560	485237
	AG	250 - 630	4547560	485244*
	APG	250 - 630	4547560	485251*
	A	320 - 800	4547560	485305
	AP	320 - 800	4547560	485312
	AG	320 - 800	4547560	485329*
	APG	320 - 800	4547560	485336*

Order Plug-in base and auxiliary connectors separately.
*An external neutral CT must be ordered. See external accessories.

Circuit Breakers and Switch Disconnectors for use above 250V DC

Model	I_R (A)	4P	
PVS800-NDL 750V DC Icu = 10kA with extension bars (mandatory)	630	4547560	484148
	800	4547560	484162

Connect 4 poles in series.

Model	I_R (A)	4P	
PVS800-NDH 1000V DC Icu = 5kA with extension bars (mandatory)	630	4547560	484193
	800	4547560	484216

Connect 4 poles in series.

ORDER CODES

TB2 H/L 800 FRAME

Circuit Breakers and Switch Disconnectors for use above 250V DC

Model	I_n (A)	4P	
PVS800-NNL 800V DC with extension bars (mandatory)	630	4547560	484124
	800	4547560	484223

Connect 4 poles in series.

Model	I_n (A)	4P	
PVS800-NNH 1000V DC with extension bars (mandatory)	800	4547560	484131
	800	4547560	484230

Connect 4 poles in series.

TB2 1000 FRAME

Adjustable Thermal and Adjustable Magnetic MCCBs

Model	I_R (A)	3P		4P	
S800-CJ *I*cu = 36kA at 400V AC Front Connected (FC)	400 - 630	4547560	812088	4547560	812101
	500 - 800	4547560	812095	4547560	812118

Model	I_R (A)	3P		4P	
S800-NJ *I*cu = 50kA at 400V AC Front Connected (FC)	400 - 630	4547560	812149	4547560	812163
	500 - 800	4547560	812156	4547560	812170

Model	I_R (A)	3P		4P	
S800-RJ *I*cu = 70kA at 400V AC Front Connected (FC)	400 - 630	4547560	812200	4547560	812224
	500 - 800	4547560	812217	4547560	812231

Electronic MCCBs

Model	Protection Codes	I_R (A)	3P		4P	
S800-NE *I*cu = 50kA at 400V AC Front Connection (FC)	*A*	250 - 630	4547560	812262	4547560	812309
	AN	250 - 630			4547560	812323
	AP	250 - 630	4547560	812279	4547560	812316
	AG	250 - 630	4547560	812286*		
	AGN	250 - 630			4547560	812347
	APG	250 - 630	4547560	812293*		
	APN	250 - 630			4547560	812330
	APGN	250 - 630			4547560	812354
	A	320 - 800	4547560	812361	4547560	812408
	AN	320 - 800			4547560	812422
	AP	320 - 800	4547560	812378	4547560	812415
	AG	320 - 800	4547560	812385*		
	AGN	320 - 800			4547560	812446
Electronic Protection Codes: *A - Standard relay with LSI characteristic* *P - Pre-trip alarm* *G - Ground fault trip* *N - N-phase protection*	*APG*	320 - 800	4547560	812392*		
	APN	320 - 800			4547560	812439
	APGN	320 - 800			4547560	812453

*An external neutral CT must be ordered. See External Accessories.

ORDER CODES

TB2 1000 FRAME

Electronic MCCBs

Model	Protection Codes	I_R (A)	3P		4P	
S800-RE *I*cu = 70kA at 400V AC Front Connection (FC)	*A*	250 - 630	4547560	812460	4547560	812507
	AN	250 - 630			4547560	812521
	AP	250 - 630	4547560	812477	4547560	812514
	AG	250 - 630	4547560	812484*		
	AGN	250 - 630			4547560	812545
	APG	250 - 630	4547560	812491*		
	APN	250 - 630			4547560	812538
	APGN	250 - 630			4547560	812552
	A	320 - 800	4547560	812569	4547560	812606
	AN	320 - 800			4547560	812620
	AP	320 - 800	4547560	812576	4547560	812613
	AG	320 - 800	4547560	812583*		
Electronic Protection Codes: *A - Standard relay with LSI characteristic* *P - Pre-trip alarm* *G - Ground fault trip* *N - N-phase protection*	*AGN*	320 - 800			4547560	812644
	APG	320 - 800	4547560	812590*	4547560	
	APN	320 - 800			4547560	812637
	APGN	320 - 800			4547560	812651

*An external neutral CT must be ordered. See External Accessories.

Model	Protection Codes	I_R (A)	3P		4P	
S1000-SE Icu = 50kA at 400V AC with extension bars (mandatory)	*A*	400 - 1000	4547560	530302	4547560	530340
	AN	400 - 1000			4547560	530364
	AP	400 - 1000	4547560	530319	4547560	530357
	AG	400 - 1000	4547560	530326*		
Electronic Protection Codes: *A - Standard relay with LSI characteristic* *P - Pre-trip alarm* *G - Ground fault trip* *N - N-phase protection*	*AGN*	400 - 1000			4547560	530388
	APG	400 - 1000	4547560	530333*		
	APN	400 - 1000			4547560	530371
	APGN	400 - 1000			4547560	530395

*An external neutral CT must be ordered. See External Accessories.

Model	Protection Codes	I_R (A)	3P		4P	
S1000-NE at 400V AC *I*cu = 70kA at 400V AC	*A*	400 - 1000	4547560	530401	4547560	530449
	AN	400 - 1000			4547560	530463
	AP	400 - 1000	4547560	530418	4547560	530456
	AG	400 - 1000	4547560	530425*		
Electronic Protection Codes: *A - Standard relay with LSI characteristic* *P - Pre-trip alarm* *G - Ground fault trip* *N - N-phase protection*	*AGN*	400 - 1000			4547560	530487
	APG	400 - 1000	4547560	530432*		
	APN	400 - 1000			4547560	530470
	APGN	400 - 1000			4547560	530494

*An external neutral CT must be ordered. See External Accessories.

TB2 1000 FRAME

MCCBs with Measurement and Data Communication

Model	Protection Codes	I_R (A)	3P		4P	
S800-NE Icu = 50kA at 400V AC Front Connection (FC)	A	250 - 630	4547560	829765	4547560	829888
	AG	250 - 630	4547560	829772*		
	AGN	250 - 630			4547560	829895
	AP	250 - 630	4547560	829789	4547560	829901
	APGS	250 - 630	4547560	829796*		
	APGNS	250 - 630			4547560	829918
	APCWH	250 - 630	4547560	829802	4547560	829925
	APGSCWH	250 - 630	4547560	829819*		
	APGNSCWH	250 - 630			4547560	829932
	A	320 - 800	4547560	830006	4547560	830129
	AG	320 - 800	4547560	830013*		
	AGN	320 - 800			4547560	830136
Electronic Protection Codes: *A - LSI* *P - Pre-trip alarm* *G - Ground fault trip* *N - N-phase protection* *S - Phase rotation protection* *C - Communication function* *W - Electrical energy pulse* *H - Harmonic current*	AP	320 - 800	4547560	830020	4547560	830143
	APGS	320 - 800	4547560	830037*		
	APGNS	320 - 800			4547560	830150
	APCWH	320 - 800	4547560	830044	4547560	830167
	APGSCWH	320 - 800	4547560	830051*		
	APGNSCWH	320 - 800			4547560	830174

*An external neutral CT must be ordered. See External Accessories.

Model	Protection Codes	I_R (A)	3P		4P	
S800-RE Icu = 70kA at 400V AC Front Connection (FC)	A	250 - 630	4547560	830242	4547560	830365
	AG	250 - 630	4547560	830259*		
	AGN	250 - 630			4547560	830372
	AP	250 - 630	4547560	830266	4547560	830389
	APGS	250 - 630	4547560	830273*		
	APGNS	250 - 630			4547560	830396
	APCWH	250 - 630	4547560	830280	4547560	830402
	APGSCWH	250 - 630	4547560	830297*		
	APGNSCWH	250 - 630			4547560	830419
	A	320 - 800	4547560	830488	4547560	830600
	AG	320 - 800	4547560	830495*		
	AGN	320 - 800			4547560	830617
Electronic Protection Codes: *A - LSI* *P - Pre-trip alarm* *G - Ground fault trip* *N - N-phase protection* *S - Phase rotation protection* *C - Communication function* *W - Electrical energy pulse* *H - Harmonic current*	AP	320 - 800	4547560	830501	4547560	830624
	APGS	320 - 800	4547560	830518*	4547560	
	APGNS	320 - 800			4547560	830631
	APCWH	320 - 800	4547560	830525	4547560	830648
	APGSCWH	320 - 800	4547560	830532*		
	APGNSCWH	320 - 800			4547560	830655

*An external neutral CT must be ordered. See External Accessories.

ORDER CODES

TB2 1000 FRAME

MCCBs with Measurement and Data Communication

Model	Protection Codes	I_R (A)	3P		4P	
S1000-SE *I*cu = 50kA at 400V AC with extension bars (mandatory)	*A*	400 - 1000A	4547560	530821	4547560	530944
	AG	400 - 1000A	4547560	530838*		
	AGN	400 - 1000A			4547560	530951
	AP	400 - 1000A	4547560	530845	4547560	530968
	APGS	400 - 1000A	4547560	530852*		
	APGNS	400 - 1000A			4547560	530975
	APCWH	400 - 1000A	4547560	530869	4547560	530982
	APGSCWH	400 - 1000A	4547560	530876*		
	APGNSCWH	400 - 1000A			4547560	530999

*An external neutral CT must be ordered. See External Accessories.

Model	Protection Codes	I_R (A)	3P		4P	
S1000-NE *I*cu = 70kA at 400V AC with extension bars (mandatory)	*A*	400 - 1000A	4547560	531307	4547560	531422
	AG	400 - 1000A	4547560	531316*		
	AGN	400 - 1000A			4547560	531439
	AP	400 - 1000A	4547560	531323	4547560	531446
	APGS	400 - 1000A	4547560	531330*		
	APGNS	400 - 1000A			4547560	531453
	APCWH	400 - 1000A	4547560	531347	4547560	531460
	APGSCWH	400 - 1000A	4547560	531354*		
	APGNSCWH	400 - 1000A			4547560	531477

*An external neutral CT must be ordered. See External Accessories.

MCCBs for use above 250V DC

Model	I_R (A)	3P	
S800-ND	630	4547560	483967
350V DC *I*cu = 30kA with extension bars (mandatory)	800	4547560	483974

Poles wired in series.

Model	I_R (A)	3P	
S800-ND	630	4547560	483981
600V DC *I*cu = 20kA with extension bars (mandatory)	800	4547560	483998

Poles wired in series.

TB2 1000 FRAME

MCCBs for use above 250V DC

Model	I_R (A)	3P	
S1000-ND 600V DC I_{cu} = 20kA with extension bars (mandatory)	1000	4547560	530531

Poles wired in series

Switch Disconnectors

Model	I_n (A)	3P		4P	
S800-NN Front Connection (FC)	800	4547560	812682	4547560	812699

Model	I_n (A)	3P		4P	
S1000-NN Front Connection (FC)	1000	4547560	530227	4547560	530234

ORDER CODES

TB2 H/L 800 AND 1000 FRAMES

Accessories

Auxiliary Switches (AX) General Purpose

Fit Accessory	Code	
Changeover	4547560	000348
Changeover for low currents (mA)	4547560	000324

Auxiliary Switches (AX) Heavy Duty

Field Fit Accessory	Code	
Normally open (Bridge, A)	4547560	000300
Normally closed (Bridge, B)	4547560	000317

Alarm Switches (AL) General Purpose

Field Fit Accessory	Code	
Changeover (1AB)	4547560	000744
Changeover for low currents (1AB) (mA)	4547560	000720

Alarm Switches (AL) Heavy Duty

Field Fit Accessory	Code	
Normally open	4547560	000706
Normally closed	4547560	000713

Shunt Trips (SHT)

Field Fit Accessory	Code	
AC 100-120V	4547560	000904
AC 200-240V	4547560	000911
AC 380-450V	4547560	000928
DC 12V	4547560	000973
DC 24V	4547560	000935
DC 48V	4547560	000942
DC 100-120V	4547560	000959
DC 200-240V	4547560	000966

TB2 H/L 800 AND 1000 FRAMES

Accessories

Undervoltage Trips (UVT)

Field Fit Accessory	Code	
UVT AC100-110V	4547560	002304
UVT AC200-220V	4547560	002311
UVT AC380-415V	4547560	002328
UVT DC24V	4547560	002335
UVT DC100-120V	4547560	002342
UVT DC200-240V	4547560	002359
UVT AC115-120V	4547560	002366
UVT AC230-240V	4547560	002373
UVT AC440-450V	4547560	002380
UVT (Time-delay) AC100-110V	4547560	003127
UVT (Time-delay) AC200-220V	4547560	003134
UVT (Time-delay) AC380-415V	4547560	003141
UVT (Time-delay) DC24V	4547560	003158
UVT (Time-delay) DC100-110V	4547560	003165
UVT (Time-delay) DC200-220V	4547560	003172
UVT (Time-delay) AC115-120V	4547560	003189
UVT (Time-delay) AC230-240V	4547560	003196
UVT (Time-delay) AC440-450V	4547560	003202
UVT (Time-delay) DC115-120V	4547560	003219
UVT (Time-delay) DC230-240V	4547560	003226

Extension Bars (FB)

Field Fit Accessory	Code	
3 bars, 630A (S800 types only)	4547560	831874
4 bars, 630A (S800 types only)	4547560	831881
3 bars, 800A (S800 types only)	4547560	831898
4 bars, 800A (S800 types only)	4547560	831904

ORDER CODES

TB2 H/L 800 AND 1000 FRAMES

Accessories

Rear Connections

Field Fit Accessory (Except* :Factory Fit)	Code	
3 studs, 800A for E and S types	4547560	081101
4 studs, 800A for E and S types	4547560	081118
3 studs, 800A for H and L types (Line Side)*	4547560	081125
4 studs, 800A for H and L types (Line Side)*	4547560	081132
3 studs, 800A for H and L types (Load Side)*	4547560	081378
4 studs, 800A for H and L types (Load Side)*	4547560	081385
3 studs, 1000A (vertical installation only)	4547560	081149
4 studs, 1000A (vertical installation only)	4547560	081156

Fixed Part of Plug-in MCCB (PM) for S800A and H/L 800 Frame MCCBs

Field Fit Accessory	Code	
3P Plug-in Block (suitable for attach bars)	4547560	012754
4P Plug-in Block (suitable for attach bars)	4547560	012952

Plug-in conversion for S800A Frame MCCBs

Field Fit Accessory	Code	
3P, 630A, 800A (S800 type only)	4547560	812705
4P, 800A (S800 types only)	4547560	812712

Plug-in conversion for H/L 800A Frame MCCBs

Factory Fit Accessory	Code
3P, 630A, 800A	Factory Fit
4P, 800A	Factory Fit

TB2 H/L 800 AND 1000 FRAMES

Accessories

Extension terminal for fixed part of Plug-in MCCB for S800A and H/L 800A MCCBs

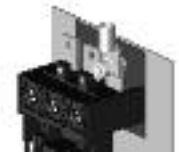

Field Fit Accessory	Code	
3 flat bars for plug-in mount blocks	4547560	045875
4 flat bars for plug-in mount blocks	4547560	045882

Terminal Covers for Extension Terminals for Fixed Part of Plug-in Base

Field Fit Accessory	Code	
3P 800A Plug-in Base, 1 Terminal Cover	4547560	045769
4P 800A Plug-in Base, 1 Terminal Cover	4547560	045776

Control Wiring Terminals for Plug-In MCCBS

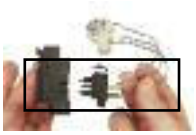

Field Fit Accessory	Code	
Plug for removable part of MCCB, 3 terminals	4547560	045004
Plug for Aux Switch and Alarm Switch	4547560	800610
Plug for SHT and UVT	4547560	800627

Contact Terasaki for H/L wiring connections. Order one plug for each accessory.

Control Wiring Terminals for Plug-In MCCBS

Field Fit Accessory	Code	
Socket for Fixed part of MCCB, 3 terminals	4547560	045004

Order one socket for each accessory

Cable Clamps (FW) for S800A

Field Fit Accessory	Code	
3 off 630A Clamps	4547560	831973
4 off 630A Clamps	4547560	831980

Motor Operation (MC)

Field Fit accessory*	Code	
AC 100V to 240V*	4547560	735400
DC 24V to 48V*	4547560	735417
DC 100V to 120V*	4547560	735424

*Motor must be factory fitted for H/L 800 frame MCCBs

Motor Operation (MC) with Automatic Reset

Field Fit accessory*	Code	
AC 100V to 240V*	4547560	753947
DC 24V to 48V*	4547560	753954
DC 100V to 120V*	4547560	753961

*Motor must be factory fitted for H/L 800 frame MCCBs

ORDER CODES

TB2 H/L 800 AND 1000 FRAMES

Accessories

External Operating Handles (Breaker Mounted Type) (HB)

Field Fit accessory	Code	
Black handle IP3X	4547560	027062
Black handle IP3X with keylock	4547560	027048
Red handle IP3X	4547560	027307
Red handle IP3X with keylock	4547560	027284
Black Handle IP5X	4547560	027079
Black Handle IP5X with keylock	4547560	027055
Red Handle IP5X	4547560	027314
Red Handle IP5X with key lock	4547560	027291

External Operating Handles (Panel Mounted Type) (S Type)

Field Fit accessory	Code	
"S" Type Black handle IP55	4547560	061240
"S" Type Red handle IP55	4547560	061257
"S" Type Black handle IP65	4547560	061288
"S" Type Red handle IP65	4547560	061295
Castell Cam for K Lock	4547560	800634

Slide Type Mechanical Interlocks (MS)

Field Fit Accessory	Code	
S type for front, rear connection type 800AF 3P	4547560	033803
S type for front, rear connection type 800AF 4P	4547560	033810
H,L type for front, rear connection type 800AF 3P	4547560	033858
H,L type for front, rear connection type 800AF 4P	4547560	033865

Order one part between two MCCBs

Link Type Mechanical Interlocks (ML)

Field Fit Accessory	Code	
Right side (common to 3P/4P)	4547560	036309
Left side, 3P	4547560	036316
Left side, 4P	4547560	036323

Order one interlock part for each MCCB

TB2 H/L 800 AND 1000 FRAMES

Accessories

Wire Type Mechanical Interlocks (MW)

Field Fit Accessory	Code	
Interlock mechanism	4547560	036330
1m length interlock cable	4547560	036064
1.5m length interlock cable	4547560	036057

Order one interlock part for each MCCB and one cable between two MCCBs

Handle Locks

Field Fit Accessory	Code	
Handle Lock 400 - 1000AF	4547560	037306

Terminal Covers for Front Connection (CF)

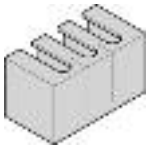

Field Fit accessory	Code	
S type 800AF 3P, 1 cover	4547560	081040
S type 800AF 4P, 1 cover	4547560	081057

Terminal Covers for Rear Connection and Plug-in Connection

Field Fit Accessory	Code	
S type 800AF 3P, 1 cover	4547560	081200
S type 800AF 4P, 1 cover	4547560	081217
H/L type 800AF 3P, 1 cover	4547560	081392
H/L type 800AF 4P, 1 cover	4547560	081408

Interpole Barriers (BA)

Field Fit accessory	Code	
Interpole barriers	4547560	043338

Interpole barriers are supplied as standard: 2 pieces per 3P MCCB, 3 pieces with a 4P MCCB.
For additional barriers please order individually.

ORDER CODES

TB2 H/L 800 AND 1000 FRAMES

Accessories

Lead Terminal Block

Field Fit Accessory	Code	
Left Side	4547560	044540
Right Side	4547560	044557

Neutral Link

Neutral Link	Code	
800A Neutral Link	4547560	800528
800A Neutral Link Shroud	4547560	800580
1000A Neutral Link	4547560	800535
1000A Neutral Link Shroud	4547560	800580

Door Flanges

Neutral Link	Code	
For toggle operation	4547560	045400
For motor operation	4547560	045417

OCR Checker

Field Fit Accessory	Code	
OCR Checker 100-120V AC	4547560	756306
OCR checker 200-240V AC	4547560	756313

External Neutral CT

External Neutral CT	Code	
630A	4547560	045929
800A	4547560	046001
1000A	4547560	046018

Terminal Temperature Monitor and Alarm

Field Fit Accessory	Code
Temperature Monitor for 3P H/L800 and S1000 Frames	Contact Terasaki
Temperature Monitor for 4P H/L800 and S1000 Frames	Contact Terasaki

Circuit Breaker Monitor

Field Fit Accessory	Code	
Electronic Display for MCCBs with measurement and communication facility (24V DC)	4547560	731907

TB2 H/L 800 AND 1000 FRAMES

Automatic Changeover Pairs

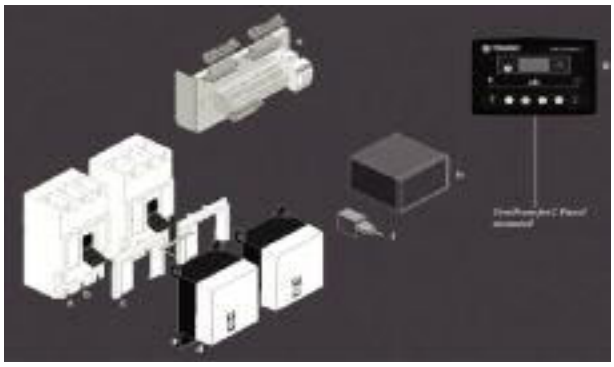

We offer a range of accessories which allow our customers to produce automatic changeover systems using our circuit breakers.

Wiring between the components is the customers responsibility, but can be easily completed by following the Terasaki Wiring Diagram, available on request.

Order codes for the necessary components are shown in the table below:

800 & 1000 Frames		Code	Function
a.	Two TemBreak 2 MCCBs, H/L 800 or S1000 Frame	Refer to MCCB order codes	Switching and protection of the load.
b.	2 x Auxillary switch for mains MCCB 2 x Auxillary switch for generator MCCB Alarm switch for main MCCB Alarm switch for generator MCCB	2 x 000348 2 x 000348 000744 000744	Electrical interlocking and MCCB status.
c or	Link type mechanical interlock (left) Link type mechanical interlock (right) Link type mechanical interlock (left, 4P)	036309 036316 036323	Mechanical interlocking. Cable-type mechanical interlocking may alternatively be used.
d.	Motor operator for mains MCCB	Refer to “Motor Operator” Select code base on required voltage.	Automatic operation of circuit breaker.
	Motor operator for generator MCCB	Refer to “Motor Operator” Select code base on required voltage.	
e.	TemTransfer 2 Wiring Panel	304001006	Simplifies customer wiring. Terminal blocks and control relay are included. Only suitable when using Terasaki Wiring Diagram.
f.	TemTransfer 2 Reset Key Switch	304001005	Resets and isolates the system for maintenance. Only suitable when using Terasaki Wiring Diagram.
g.	TemTransfer 2 Automatic Changeover Controller	304001001	Monitors mains and generator voltages and controls transfer of load. Pre-configured to operate with Terasaki Wiring Diagram.
	TemTransfer 2 Interface Kit (optional)	304001002	Optional: Allows re-configuration of TemTransfer 2, diagnostics and advanced parameter settings.

ORDER CODES

TB2 1250 FRAME

Electronic MCCBs

Model	Protection Codes	I_R (A)	3P		4P	
S1250-SE *Icu* = 50kA at 400V AC with extension bars (mandatory) *Electronic Protection Codes:*	*A*	500 - 1250A	4547560	552809	4547560	552960
	AN	500 - 1250A			4547560	552984
	AP	500 - 1250A	4547560	552816	4547560	552977
	AG	500 - 1250A	4547560	552823*		
	AGN	500 - 1250A			4547560	553004
A - Standard relay with LSI characteristic *P - Pre-trip alarm* *G - Ground fault trip* *N - N-phase protection*	*APG*	500 - 1250A	4547560	552830*		
	APN	500 - 1250A			4547560	552991
	APGN	500 - 1250A			4547560	553011

*An external neutral CT must be ordered. See External Accessories.

Model	Protection Codes	I_R (A)	3P		4P	
S1250-NE *Icu* = 70kA at 400V AC with extension bars (mandatory)	*A*	500 - 1250A	4547560	550607	4547560	550683
	AN	500 - 1250A			4547560	550706
	AP	500 - 1250A	4547560	550614	4547560	550690
	AG	500 - 1250A	4547560	550621*		
	AGN	500 - 1250A			4547560	550720
Electronic Protection Codes:	*APG*	500 - 1250A	4547560	550638*		
A - Standard relay with LSI characteristic *P - Pre-trip alarm* *G - Ground fault trip* *N - N-phase protection*	*APN*	500 - 1250A			4547560	550713
	APGN	500 - 1250A			4547560	550737

*An external neutral CT must be ordered. See External Accessories.

Model	Protection Codes	I_R (A)	3P		4P	
S1250-GE *Icu* = 85kA at 400V AC with extension bars (mandatory)	*A*	500 - 1250A	4547560	550805	4547560	550881
	AN	500 - 1250A			4547560	550904
	AP	500 - 1250A	4547560	550812	4547560	550898
	AG	500 - 1250A	4547560	550829*		
Electronic Protection Codes:	*AGN*	500 - 1250A			4547560	550928
A - Standard relay with LSI characteristic *P - Pre-trip alarm* *G - Ground fault trip* *N - N-phase protection*	*APG*	500 - 1250A	4547560	550836*	4547560	
	APN	500 - 1250A	4547560		4547560	550911
	APGN	500 - 1250A			4547560	550935

*An external neutral CT must be ordered. See External Accessories.

Switch Disconnectors

Model	I_n (A)	3P		4P	
S1250-NN with extension bars (mandatory)	1250	4547560	551246	4547560	551260

TB2 1600 FRAME

Electronic MCCBs

Model	Protection Codes	I_R (A)	3P		4P	
S1600-SE Icu = 50kA at 400V AC with extension bars (mandatory)	A	640 - 1600A	4547560	570407	4547560	570483
	AN	640 - 1600A			4547560	570506
	AP	640 - 1600A	4547560	570414	4547560	570490
	AG	640 - 1600A	4547560	570421*		
Electronic Protection Codes: *A - Standard relay with LSI characteristic* *P - Pre-trip alarm* *G - Ground fault trip* *N - N-phase protection*	AGN	640 - 1600A			4547560	570520
	APG	640 - 1600A	4547560	570438*		
	APN	640 - 1600A			4547560	570513
	APGN	640 - 1600A			4547560	570537

*An external neutral CT must be ordered. See External Accessories.

Model	Protection Codes	I_R (A)	3P		4P	
S1600-SE Vertical RC Icu = 50kA at 400V AC Rear Connection	A	640 - 1600A	4547560	570902	4547560	570940
	AN	640 - 1600A			4547560	570964
	AP	640 - 1600A	4547560	570919	4547560	570957
	AG	640 - 1600A	4547560	570926*		
	AGN	640 - 1600A			4547560	570988
Electronic Protection Codes: *A - Standard relay with LSI characteristic* *P - Pre-trip alarm* *G - Ground fault trip*	APG	640 - 1600A	4547560	570933*		
	APN	640 - 1600A			4547560	570971
	APGN	640 - 1600A			4547560	570995

*An external neutral CT must be ordered. See External Accessories.

Model	Protection Codes	I_R (A)	3P		4P	
S1600-NE Icu = 85kA at 400V AC with extension bars (mandatory)	A	640 - 1600A	4547560	570209	4547560	570285
	AN	640 - 1600A			4547560	570308
	AP	640 - 1600A	4547560	570216	4547560	570292
	AG	640 - 1600A	4547560	570223*		
Electronic Protection Codes: *A - Standard relay with LSI characteristic* *P - Pre-trip alarm* *G - Ground fault trip* *N - N-phase protection*	AGN	640 - 1600A			4547560	570322
	APG	640 - 1600A	4547560	570230*		
	APN	640 - 1600A			4547560	570315
	APGN	640 - 1600A			4547560	570339

*An external neutral CT must be ordered. See External Accessories.

Model	Protection Codes	I_R (A)	3P		4P	
S1600-NE Vertical RC Icu = 85kA at 400V AC Rear Connection *Electronic Protection Codes:*	A	640 - 1600A	4547560	570803	4547560	570841
	AN	640 - 1600A			4547560	570865
	AP	640 - 1600A	4547560	570810	4547560	570858
	AG	640 - 1600A	4547560	570827*	4547560	
A - Standard relay with LSI characteristic *P - Pre-trip alarm* *G - Ground fault trip* *N - N-phase protection*	AGN	640 - 1600A			4547560	570889
	APG	640 - 1600A	4547560	570834*	4547560	
	APN	640 - 1600A			4547560	570872
	APGN	640 - 1600A			4547560	570896

*An external neutral CT must be ordered. See External Accessories.

ORDER CODES

TB2 1600 FRAME

Switch Disconnectors

Model	I_n (A)	3P		4P	
S1600-NN with extension bars (mandatory)	1600	4547560	570643	4547560	570667

Model	I_n (A)	3P		4P	
S1600-NN Rear Connection (RC)	1600	4547560	571022	4547560	571039

TB2 1250 AND TB2 1600 FRAMES

Accessories

Auxiliary Switches (AX) General Purpose

Fit Accessory	Code	
Changeover	4547560	000348
Changeover for low currents (mA)	4547560	000324

Auxiliary Switches (AX) Heavy Duty

Field Fit Accessory	Code	
Normally open (Bridge, A)	4547560	000300
Normally closed (Bridge, B)	4547560	000317

Alarm Switches (AL) General Purpose

Field Fit Accessory	Code	
Changeover (1AB)	4547560	000744
Changeover for low currents (1AB) (mA)	4547560	000720

Alarm Switches (AL) Heavy Duty

Field Fit Accessory	Code	
Normally open	4547560	000706
Normally closed	4547560	000713

Shunt Trips (SHT)

Field Fit Accessory	Code	
AC 100-120V	4547560	003905
AC 200-240V	4547560	003912
AC 380-450V	4547560	003929
DC 24V	4547560	003936
DC 48V	4547560	003943
DC 100-120V	4547560	003950
DC 200-240V	4547560	003967

ORDER CODES

TB2 1250 AND TB2 1600 FRAMES

Accessories

Undervoltage Trips (UVT)

Field Fit Accessory	Code	
UVT AC100-110V	4547560	002304
UVT AC200-220V	4547560	002311
UVT AC380-415V	4547560	002328
UVT DC24V	4547560	002335
UVT DC100-120V	4547560	002342
UVT DC200-240V	4547560	002359
UVT AC115-120V	4547560	002366
UVT AC230-240V	4547560	002373
UVT AC440-450V	4547560	002380
UVT (Time-delay) AC100-110V	4547560	003233
UVT (Time-delay) AC200-220V	4547560	003240
UVT (Time-delay) AC380-415V	4547560	003257
UVT (Time-delay) DC24V	4547560	003264
UVT (Time-delay) DC100-110V	4547560	003271
UVT (Time-delay) DC200-220V	4547560	003288
UVT (Time-delay) AC115-120V	4547560	003295
UVT (Time-delay) AC230-240V	4547560	003301
UVT (Time-delay) AC440-450V	4547560	003318
UVT (Time-delay) DC115-120V	4547560	003325
UVT (Time-delay) DC230-240V	4547560	003332

Rear Connections for S1250 MCCBs

Factory Fit (contact Terasaki)	Code	
3 studs, 1250A (bottom)	4547560	831560
3 studs, 1250A (top)	4547560	831546
4 studs, 1250A (bottom)	4547560	831577
4 studs, 1250A (top)	4547560	831553

Fixed Part of Plug-in MCCB (PM)

Factory Fit (contact Terasaki)	Code	
3P, 1250A	4547560	013003
4P, 1250A	4547560	013034

TB2 1250 AND TB2 1600 FRAMES

Accessories

Plug-in conversions for S1250 Frame MCCBs

Factory Fit (contact Terasaki)	Code	
3P, 1250A	4547560	801969
4P, 1250A	4547560	801976

Control Wiring Connectors for S1250 Plug-in MCCB

Factory Fit (contact Terasaki)	Code	
Connectors for MCCB side	4547560	831805

Each connector has 5 terminals.
Work out how many connectors are required from the total number of terminals on all internal accessories.

Motor Operation (MC)

Field Fit accessory	Code	
AC 100V to 115V	4547560	735332
AC 200V to 230V	4547560	735349
AC 240V	4547560	735356
DC 24V	4547560	735363
DC 100V to 110V	4547560	735370

External Operating Handles (Breaker Mounted Type) (HB)

Field Fit accessory	Code	
Black handle IP3X	4547560	027543
Red handle IP3X	4547560	027789
Black Handle IP5X	4547560	027550
Red Handle IP5X	4547560	027796

External Operating Handles (Panel Mounted Type) (S Type)

Field Fit accessory	Code	
"S" Type Black handle IP55	4547560	061325
"S" Type Red handle IP55	4547560	061332
"S" Type Black handle IP65	4547560	061363
"S" Type Red handle IP65	4547560	061370
Castell Cam for K Lock	4547560	800634

ORDER CODES

TB2 1250 AND TB2 1600 FRAMES

Accessories

Slide Type Mechanical Interlocks (MS)

Field Fit Accessory	Code	
S type for front, rear connection type 1250AF 3P	4547560	035302
S type for front, rear connection type 1250AF 4P	4547560	035319

Order one part between two MCCBs

Rear "See-Saw" Type Mechanical Interlocks for MCCBs with Extension Bars

Factory Fit (contact Terasaki)	Code	
Rear Mechanical Interlock 1250A 3P	4547560	801983
Rear Mechanical Interlock 1250A 4P	4547560	801990
Rear Mechanical Interlock 1600A 3P	4547560	802003
Rear Mechanical Interlock 1600A 4P	4547560	802010

Order one interlock between 2 MCCBs

Rear Wire Type Mechanical Interlocks for MCCBs with Extension Bars

Factory Fit (contact Terasaki)	Code	
Wire Interlock Mechanism for 1250A Frame	4547560	830846
Wire Interlock Mechanism for 1600A Frame	4547560	830853
1m length interlock cable	4547560	831362
1.5m length interlock cable	4547560	831379

Order one interlock mechanism for each MCCB and one cable between two MCCBs

Handle Locks (HL) and Extension (HA)

Field Fit Accessory	Code	
Handle Lock (HL) 1250AF	4547560	035326
Handle Extension (HA) 800AF ~ 1250AF	4547560	033001

Terminal Covers for S1250 MCCBs with Extension Bars

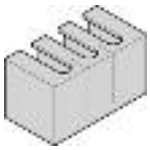

Field Fit Accessory	Code	
3P, 1 cover 1250AF	4547560	081088
4P, 1 cover 1250AF	4547560	081095

TB2 1250 AND TB2 1600 FRAMES

Accessories

Interpole Barriers (BA)

Field Fit Accessory	Code	
Interpole barriers are supplied as standard: 2 pieces per 3P MCCB, 3 pieces with a 4P MCCB. For additional barriers please order individually Field Fit accessory		
S types	4547560	043338

Lead Terminal Block

Factory Fit Accessory	Code	
Left Side	4547560	802027
Right Side	4547560	802027

OCR Checker

Field Fit Accessory	Code	
OCR Checker 100-120V AC	4547560	756306
OCR Checker 200-240V AC	4547560	756313

External Neutral CTs for 3P MCCBs with Ground Fault Protection

Field Fit Accessory	Code	
1250A	4547560	046025
1600A	4547560	046032

ORDER CODES

TB2 1250 AND TB2 1600 FRAMES

Automatic Changeover Pairs

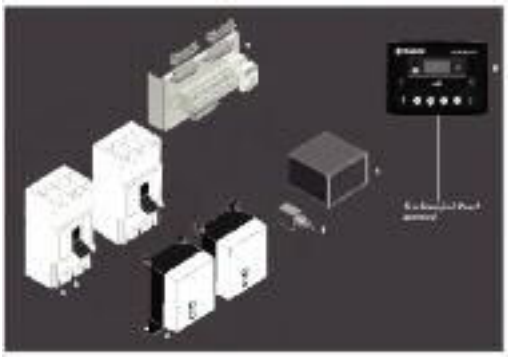

We offer a range of accessories which allow our customers to produce automatic changeover systems using our circuit breakers.

The components below may be purchased individually with wiring and assembly to be completed by the customer. Alternatively the system can be purchased as a completely wired and assembled unit from Terasaki.

Order codes for the necessary components are shown in the table below:

1250A Frame 3P		Code	Function
a.	Two TemBreak 2 MCCBs, 3P, 1250A Frame	Refer to MCCB order codes	Switching and protection of the load.
b.	2 x Auxillary switch for mains MCCB 2 x Auxillary switch for generator MCCB Alarm switch for main MCCB Alarm switch for generator MCCB	2 x 000348 2 x 000348 000744 000744	Electrical interlocking and MCCB status.
c.	Rear mechanical interlock for 1250A 3P	801983	Mechanical interlocking. Cable-type mechanical interlocking may alternatively be used. Contact Terasaki for a price.
d.	Motor operator for mains MCCB Motor operator for generator MCCB	Refer to “Motor Operator” Select code based on required voltage.	Automatic operation of circuit breaker.
e.	TemTransfer 2 Wiring Panel for 1250A & 1600A	304001007	Simplifies customer wiring. Terminal blocks and control relay are included. Only suitable when using Terasaki Wiring Diagram.
f.	TemTransfer 2 Reset Key Switch	304001005	Resets and isolates the system for maintenance. Only suitable when using Terasaki Wiring Diagram.
g.	TemTransfer 2 Automatic Changeover Controller	304001001	Monitors mains and generator voltages and controls transfer of load. Pre-configured to operate with Terasaki Wiring Diagram.
h.	TemTransfer 2 Power Supply 24V DC	304001003	Power Supply for TemTransfer 2. Also available in 12V DC.
i.	TemTransfer 2 Interface Kit (optional)	304001002	Optional: Allows re-configuration of TemTransfer 2, diagnostics and advanced parameter settings.

TB2 1250 AND TB2 1600 FRAMES

Automatic Changeover Pairs

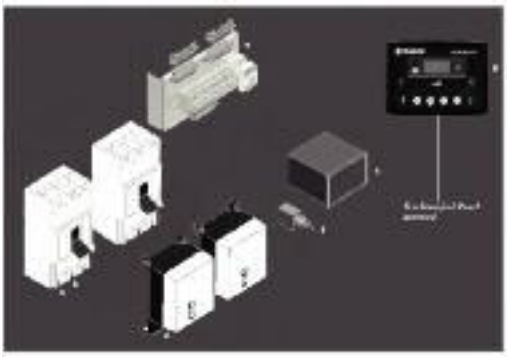

We offer a range of accessories which allow our customers to produce automatic changeover systems using our circuit breakers.

The components below may be purchased individually with wiring and assembly to be completed by the customer. Alternatively the system can be purchased as a completely wired and assembled unit from Terasaki.

Order codes for the necessary components are shown in the table below:

1250A Frame 4P		Code	Function
a.	Two TemBreak 2 MCCBs, 4P, 1250A Frame	Refer to MCCB order codes	Switching and protection of the load.
b.	2 x Auxillary switch for mains MCCB 2 x Auxillary switch for generator MCCB Alarm switch for main MCCB Alarm switch for generator MCCB	2 x 000348 2 x 000348 000744 000744	Electrical interlocking and MCCB status.
c.	Rear mechanical interlock for 1250A 4P	801990	Mechanical interlocking. Cable-type mechanical interlocking may alternatively be used. Contact Terasaki for a price.
d.	Motor operator for mains MCCB Motor operator for generator MCCB	Refer to “Motor Operator” Select code based on required voltage.	Automatic operation of circuit breaker.
e.	TemTransfer 2 Wiring Panel for 1250A & 1600A	304001007	Simplifies customer wiring. Terminal blocks and control relay are included. Only suitable when using Terasaki Wiring Diagram.
f.	TemTransfer 2 Reset Key Switch	304001005	Resets and isolates the system for maintenance. Only suitable when using Terasaki Wiring Diagram.
g.	TemTransfer 2 Automatic Changeover Controller	304001001	Monitors mains and generator voltages and controls transfer of load. Pre-configured to operate with Terasaki Wiring Diagram.
h.	TemTransfer 2 Power Supply 24V DC	304001003	Power Supply for TemTransfer 2. Also available in 12V DC.
i.	TemTransfer 2 Interface Kit (optional)	304001002	Optional: Allows re-configuration of TemTransfer 2, diagnostics and advanced parameter settings.

ORDER CODES

TB2 1250 AND TB2 1600 FRAMES

Automatic Changeover Pairs

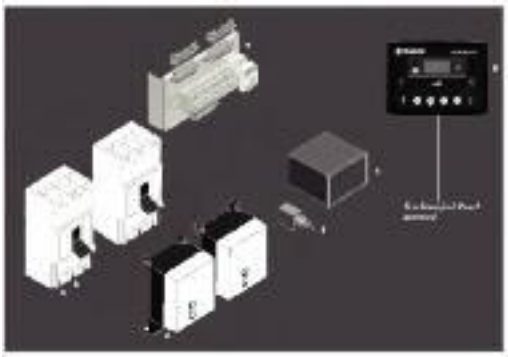

We offer a range of accessories which allow our customers to produce automatic changeover systems using our circuit breakers.

The components below may be purchased individually with wiring and assembly to be completed by the customer. Alternatively the system can be purchased as a completely wired and assembled unit from Terasaki.

Order codes for the necessary components are shown in the table below:

1600A Frame 3P		Code	Function
a.	Two TemBreak 2 MCCBs, 3P, 1600A Frame	Refer to MCCB order codes	Switching and protection of the load.
b.	2 x Auxillary switch for mains MCCB 2 x Auxillary switch for generator MCCB Alarm switch for main MCCB Alarm switch for generator MCCB	2 x 000348 2 x 000348 000744 000744	Electrical interlocking and MCCB status.
c.	Rear mechanical interlock for 1600A 3P	802003	Mechanical interlocking. Cable-type mechanical interlocking may alternatively be used. Contact Terasaki for a price.
d.	Motor operator for mains MCCB Motor operator for generator MCCB	Refer to “Motor Operator” Select code based on required voltage.	Automatic operation of circuit breaker.
e.	TemTransfer 2 Wiring Panel for 1250A & 1600A	304001007	Simplifies customer wiring. Terminal blocks and control relay are included. Only suitable when using Terasaki Wiring Diagram.
f.	TemTransfer 2 Reset Key Switch	304001005	Resets and isolates the system for maintenance. Only suitable when using Terasaki Wiring Diagram.
g.	TemTransfer 2 Automatic Changeover Controller	304001001	Monitors mains and generator voltages and controls transfer of load. Pre-configured to operate with Terasaki Wiring Diagram.
h.	TemTransfer 2 Power Supply 24V DC	304001003	Power Supply for TemTransfer 2. Also available in 12V DC.
i.	TemTransfer 2 Interface Kit (optional)	304001002	Optional: Allows re-configuration of TemTransfer 2, diagnostics and advanced parameter settings.

TB2 1250 AND TB2 1600 FRAMES

Automatic Changeover Pairs

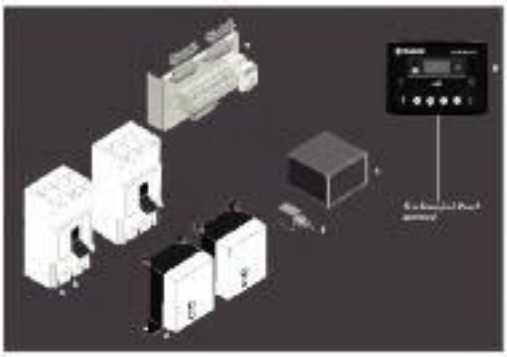

We offer a range of accessories which allow our customers to produce automatic changeover systems using our circuit breakers.

The components below may be purchased individually with wiring and assembly to be completed by the customer. Alternatively the system can be purchased as a completely wired and assembled unit from Terasaki.

Order codes for the necessary components are shown in the table below:

1600A Frame 4P		Code	Function
a.	Two TemBreak 2 MCCBs, 4P, 1600A Frame	Refer to MCCB order codes	Switching and protection of the load.
b.	2 x Auxillary switch for mains MCCB 2 x Auxillary switch for generator MCCB Alarm switch for main MCCB Alarm switch for generator MCCB	2 x 000348 2 x 000348 000744 000744	Electrical interlocking and MCCB status.
c.	Rear mechanical interlock for 1600A 4P	802010	Mechanical interlocking. Cable-type mechanical interlocking may alternatively be used. Contact Terasaki for a price.
d.	Motor operator for mains MCCB Motor operator for generator MCCB	Refer to “Motor Operator” Select code based on required voltage.	Automatic operation of circuit breaker.
e.	TemTransfer 2 Wiring Panel for 1250A & 1600A	304001007	Simplifies customer wiring. Terminal blocks and control relay are included. Only suitable when using Terasaki Wiring Diagram.
f.	TemTransfer 2 Reset Key Switch	304001005	Resets and isolates the system for maintenance. Only suitable when using Terasaki Wiring Diagram.
g.	TemTransfer 2 Automatic Changeover Controller	304001001	Monitors mains and generator voltages and controls transfer of load. Pre-configured to operate with Terasaki Wiring Diagram.
h.	TemTransfer 2 Power Supply 24V DC	304001003	Power Supply for TemTransfer 2. Also available in 12V DC.
i.	TemTransfer 2 Interface Kit (optional)	304001002	Optional: Allows re-configuration of TemTransfer 2, diagnostics and advanced parameter settings.

ORDER CODES

DC 1250A AND 1600A TEMBREAK MCCBS

MCCBs for use above 250V DC

Model	I_n (A)	3P
XS1250ND with extension bars (mandatory) I_{cu} = 50kA @ 500V DC I_{cu} = 20kA @ 600V DC DC Magnetic only	1250	206645512
XS1600ND with extension bars (mandatory) I_{cu} = 50kA @ 500V DC I_{cu} = 20kA @ 600V DC DC Magnetic only	1600	206740516

Auxiliary Switches

Factory Fit Accessory	Code
1 Auxiliary	212001006
2 Auxiliary	212001016
3 Auxiliary	212001026

Alarm Switches

Factory Fit Accessory	Code
1 Alarm	212001071

Combined Auxiliary/Alarm Switches

Factory Fit Accessory	Code
1 Auxiliary, 1 Alarm	212001043
2 Auxiliaries, 1 Alarm	212001053
3 Auxiliaries, 1 Alarm	212001101
2 Auxiliary, 2 Alarm	212001102

DC 1250A AND 1600A TEMBREAK MCCBS

Accessories

Rear Connections for 1250A TemBreak MCCBs

Factory Fit Accessory	Code
Studs	Contact Terasaki

Rear Connections for 1600A TemBreak MCCBs

Factory Fit Accessory	Code
Studs	Contact Terasaki

Motor Operators

Field Fit Accessory	Code
AC110-115V	211008074
AC200-230V	211008075
AC240V	212008044
DC100V	211008077
DC24V	211008076

External Operating Handels: Panel Mounted

Field Fit Accessory	Code
"S" Type Black handle IP55	801204
"S" Type Red handle IP55	801211
"S" Type Black handle IP65	801242
"S" Type Red handle IP65	801259

Handle Lock and Handle Extension

Field Fit Accessory	Code
Handle Lock	211011005
Handle Extension	215011007

Interpole Barriers

Field Fit Accessory	Code
1 Barrier	215004042

ORDER CODES

DC 2000A, 2500A AND 3200A TEMBREAK MCCBS

Model	I_n (A)	3P
XS2000ND *I*cu = 50kA @ 500V DC *I*cu = 20kA @ 600V DC with extension bars (mandatory)	2000	206840520

Model	I_n (A)	3P
XS2000ND *I*cu = 50kA @ 500V DC *I*cu = 20kA @ 600V DC Rear Connected (RC)	2000	206840620

Model	I_n (A)	3P
XS2500ND *I*cu = 50kA @ 500V DC *I*cu = 20kA @ 600V DC Rear Connected (RC)	2500	206940625

Model	I_n (A)	3P
XS3200ND *I*cu = 50kA @ 500V DC *I*cu = 20kA @ 600V DC Rear Connected (RC)	32500	206940632

DC TEMBREAK 2 2000A AND 2500A FRAME

Accessories

Auxiliary Switches

Factory Fit Accessories	Code
1 Auxiliary	212001010
2 Auxiliaries	212001020
3 Auxiliaries	212001030
4 Auxiliaries	212001031
5 Auxiliaries	212001035
6 Auxiliaries	212001036

Alarm Switches

Factory Fit Accessories	Code
1 Alarm	212001075

Combined Auxiliary and Alarm Switches

Factory Fit	Code
1 Auxiliary, 1 Alarm	212001047
2 Auxiliaries, 1 Alarm	212001057
3 Auxiliaries, 1 Alarm	212001063
4 Auxiliaries, 1 Alarm	212001064
5 Auxiliaries, 1 Alarm	212001065

Motor Operators

Field Fit Accessory	Code
AC100-1105V	211008018
AC200-220V	211008026
DC 110V	211008059
AC 440V	211008088

Handle Locks

Field Fit Accessory	Code
Handle Lock	211011006

TERASAKI ELECTRIC CO., LTD.

Head Office: 7-2-10 Hannancho, Abenoku
Osaka, Japan

Circuit Breaker Division: 7-2-10 Kamihigashi, Hiranoku Osaka, Japan

Telephone: 81-6-6791-9323
Fax: 81-6-6791-9274
Email: int-sales@terasaki.co.jp
http://www.terasaki.co.jp/

Ratings and specifications are subject to change without notice.

CAT REF. 16-I61EU

© Copyright Terasaki Electric (Europe) Ltd 2016

TERASAKI ELECTRIC (EUROPE) LTD.

80 Beardmore Way, Clydebank Industrial Estate
Clydebank, Glasgow, G81 4HT, Scotland (UK)

Telephone: 44-141-941-1940
Fax: 44-141-952-9246
Email: marketing@terasaki.co.uk
http://www.terasaki.com/

TERASAKI ELECTRIC (EUROPE) LTD. (FILIALE ITALIA)

Via Ambrosoli, 4A-20090 Rodano, Milano, Italy

Telephone: 39-02-92278300
Fax: 39-02-92278320
Email: info@terasaki.it
http://www.terasaki.it/

TERASAKI ELECTRIC (EUROPE) LTD. (SUCURSAL EN ESPAÑA)

C/Ros Dels Ocells 5-7, 08043 Granollers, (Barcelona) España

Telephone: 34-93-879-60-50
Fax: 34-93-870-39-05
Email: terasaki@terasaki.es
http://www.terasaki.es/

TERASAKI ELECTRIC (EUROPE) LTD

Box 2082, Flygfältsgatan 12

SE-128 22 Skarpnäck

Telephone: +46-8-556-282-30
Fax: +46-8-556-282-39
Email: info@terasaki.se
http://www.terasaki.se

TERASAKI CIRCUIT BREAKERS (S) PTD. LTD.

17 Tuas Street, Singapore 638454

Telephone: 65-6744-9752
Fax: 65-6748-7592
Email: tecs@pacific.net.sg

TERASAKI ELECTRIC (M) SDN, BHD.

Lot 3, Jalan 16/13D, 40000 Shah Alam, Selangor Darul Ehsan, Malaysia

Telephone: 60-3-5549-3820
Fax: 60-3-5549-3960
Email: terasaki@terasaki.com.my

TERASAKI DO BRASIL LTDA.

Rua Cordovil, 259-Parada De Lucas, 21250-450
Rio De Janeiro-R.J., Brazil

Telephone: 55-21-3301-9898
Fax: 55-21-3301-9861
Email: terasaki@terasaki.com.br
http://www.terasaki.com.br

TERASAKI ELECTRIC (CHINA) LTD.

72 Pacific Industrial Park, Xin Tang Zengcheng,
Guangzhou 511340, China

Telephone: 86-20-8270-8556
Fax: 86-20-8270-8586
Email: terasaki@public.guangzhou.gd.cn

TERASAKI ELECTRIC GROUP SHANGHAI REPRESENTATIVE OFFICE

Room No. 1405-6, Tomson Commercial Building
710 Dong Fang Road, Pudong, Shanghai, 200122, China

Telephone: 86-21-58201611
Fax: 86-21-58201621
Email: terasaki@vip.163.com

TERASAKI MIDDLE EAST

Saif Zone Q3-168, PO Box 120860
Sharjah, UAE

Telephone: 971-56-676-4825
Fax: 976-655-78141
Email: middleeast@terasaki.co.uk
http://www.terasaki.com